DOE F 1325.8

United States Government

memorandum

Department of Energy (DOE)
Savannah River Operations Office (SR)

DATE: AUG 31 2007

REPLY TO ATTN OF: TSD (Mark A. Smith, 803-952-9613)

SUBJECT: Request for Concurrence with Recommendation of the Defense Nuclear Facilities Safety Board 2004-2 Equivalency Report for the Tank Farm Waste Tank and Transfer Facility Ventilation System Evaluation (Your Memorandum, dated 6/29/07)

TO: Dae Y. Chung, Deputy Assistant Secretary for Safety Management and Operations (EM-60), HQ

Please find attached to this memorandum two attachments containing the information requested in the referenced memorandum. The attachments contain the complete Table 3.3-16 and supporting text from the approved Documented Safety Analysis (DSA); Washington Savannah River Company (WSRC) Memorandum LWO-LWE-2007-00042, *T. L. Ortner to R. L. Salizzoni, Annual Review of Documented Safely Analysis (DSA) Table 3.3-16 Equipment Modifications,* February 15, 2007; A listing of all completed and scheduled upgrades that satisfy gaps identified in Table 3.3-16 from the approved DSA; and Actions taken by both the Contractor and the Operations Office, to date, to periodically assess the relative priority of proposed modifications as well as assess the continued effectiveness and reliability of the established control sets. Also included are the 2006 and 2007 Safety Evaluation Report excerpts for the annual update of the Tank Farm DSA where Department of Energy Savannah River has evaluated their assessment on an annual basis.

If you have any questions, please contact me or have your staff contact Mark A. Smith at 803-952-9613.

William F. Spoon
for Jeffrey M. Allison
Manager

TSD:MAS:bk

OSQA-07-0127

2 Attachments:
(1) WSRC Tank Farm Additional Information
(2) DOE-SR SER Excerpts for 2006 and 2007

cc w/o attachment:
Dr. Robert C. Nelson (EM-61), HQ
Percy Fountain (EM-3.2), HQ

SAVANNAH RIVER SITE
Aiken, SC 29808 • www.srs.gov

AUG 2 9 2007

LWO-LWE-2007-00188
RSM Track#: 10048

UNCLASSIFIED
DOES NOT CONTAIN
UNCLASSIFIED CONTROLLED
NUCLEAR INFORMATION
ADC & Reviewing Official: Kasali; ND Blackerby
(Name and Title)
Date: 8/30/07

Carl A. Everatt, Director
Office of Safety and Quality Assurance
P.O. Box A
Aiken, SC 29808

Dear Mr. Everatt:

Subject: Response to Memorandum Allison to Sain, Approval of Defense Nuclear Facility Safety Board (DNFSB) Recommendation 2004-2 Active Confinement System Implementation Plan Deliverable 8.6.3 Table 4-3 Data Collection Reports, and Request for Additional Information Related to DNFSB 2004-2 Evaluation Report for the Tank Farm Waste Tank and Transfer Facility Ventilation System Evaluation, August 21, 2007.

This letter responds to the request for additional information in the subject memorandum regarding the DNFSB 2004-2 submittal for the Tank Farm Waste Tank and Transfer Facility Ventilation System Evaluation. Specifically, the following four items were listed to support supplemental information requests from EM-60;

- *The complete Table 3.3-16 and supporting text from the approved DSA;*
- *WSRC Memorandum LWO-LWE-2007-00042, T.L. Ortner to R.L. Salizzoni, Annual Review of Documented Safety Analysis (DSA) Table 3.3-16 Equipment Modifications, February 15, 2007;*
- *A listing of all completed and scheduled upgrades that satisfy gaps identified in Table 3.3-16 from the approved DSA; and*
- *Actions taken by both the Contractor and the Operations Office, to date, to secure funding in order to close the identified gaps.*

The following responds to each of the items requested:

- *The complete Table 3.3-16 and supporting text from the approved DSA*

  - The requested information is included as Attachment 1 to this response. Note that the table describes the improvement desired, the DSA accident analysis (Chapter 3) sections that are pertinent, as well as the sections in the DSA (Chapter 4) that discuss the recognized vulnerabilities and the acceptability of the existing controls without implementation of the identified improvements. In each case, acceptable measures are currently in place to ensure facility safety as documented in the DSA.

- *WSRC Memorandum LWO-LWE-2007-00042, T.L. Ortner to R.L. Salizzoni, Annual Review of Documented Safety Analysis (DSA) Table 3.3-16 Equipment Modifications, February 15, 2007*

  - The requested information is included as Attachment 2 to this response. This report addresses the most recent review of Table 3.3-16 improvement items and summarizes the current status for each vulnerability including cost ranges and priorities for the improvements listed.

- *A listing of all completed and scheduled upgrades that satisfy gaps identified in Table 3.3-16 from the approved DSA*

  Numerous upgrades and project evaluations have occurred to address or prevent additional items being included in Table 3.3-16.

  - ***Gas Release Mode Modifications***: Safety Class equipment to address hydrogen releases during salt removal in Tanks 3, 11, 25, 28, and 41 has been installed. As waste tanks are placed in a GAS RELEASE MODE (per S-TSR-G-00001, Technical Safety Requirements) modifications are required to their ventilation systems and associated waste removal process equipment. GAS RELEASE MODE is entered

under such conditions as exceeding 60% of LFL due to planned processing evolutions. Necessary modifications include such items as installing a Ventilation Exhaust Low Flow Interlock (i.e., flow indication, control room alarms, low flow shutoff interlock), Hydrogen Monitoring Equipment and High Concentration Interlock (i.e., LFL monitor, control room alarms, high hydrogen concentration shutoff interlock) and Transfer System/Mixing Devise/ Liquid Addition interlocks (transfer motive force/mixing device/liquid addition valve closure, etc on high LFL or ventilation loss). These modifications were installed on tanks in accordance with tank waste removal priorities agreed to by WSRC and the DOE. Current projects in the planning stages have provisions for installation of these modifications if studies demonstrate that GAS RELEASE MODE will be entered during salt dissolution. If calculations demonstrate salt dissolution will not require entry into GAS RELEASE MODE, these modifications will not be necessary.

- ***Chromate System Siphon Breaks:*** Seismically qualified siphon breaks were installed on the chromate systems for Tanks 29-35 (SC for Tanks 29-32 and 35, SS for Tanks 33-34) to reduce the risk of seismic induced waste tank siphons in the chromate cooling piping. In addition Table 3.3-16 identifies the need for siphon breaks to be installed on Tanks 39, 40, and 51 when sludge processing of Tanks 32, 35, and 39 is initiated (currently FY18). Provisions are in place in the DSA to prohibit sludge processing activities in Tanks 32, 35, and 39 without the siphon breakers installed.

- ***Conductivity Probes:*** Selected conductivity probes have been updated with alarm relays that are failsafe for generating a control room alarm on loss of power. These are replaced as part of routine maintenance when a non-failsafe relay requires replacement.

- ***Tank 40/51 Ventilation Upgrades:*** The remaining modifications/upgrades as listed in Table 3.3-16 are being approached on a priority basis for funding identification. As show in Attachment 2, the priority effort for risk reduction would be the upgrade of Tank 40 and 51 ventilation systems for flammable vapor removal from the waste tanks in all normal and NPH events to prevent deflagrations, particularly for out year processing activities. These two tanks are used to prepare and store sludge batches for feed to the Defense Waste Processing Facility. The Tank 40 and 51 ventilation system upgrade was thoroughly evaluated and included such items as redundant ventilation systems, diesel emergency power, appropriate interlock systems, NPH qualifications, etc. The project preliminary estimate was greater than $40 million. This project was deferred due to (1) funding availability and (2) despite the large expenditure of money, the sizing of the system to overcome the potential hydrogen release rate and maintain the tank vapor space below 100% of the LFL was impractical for all possible release events. Subsequently Table 3.3-16 was revised to modify the safety function from preventing a flammable vapor concentration to minimizing the time at risk (i.e., minimize the time during and after the seismic-induced release of trapped gas until the released hydrogen diffuses to the point where the vapor space is back below 100% LFL). A new project was started in FY06 for a portion of the Tank 40/51 work scope (about $10M estimate at the time) aimed at improving reliability during normal operation and following a seismic event. This project is on hold due to funding as agreed upon with the DOE. Capital expenditure is being focused on waste removal and risk reduction through MAR elimination in process areas. Compensatory actions listed in the DSA considering current system configurations remain valid without upgrades.

For all other items in Table 3.3-16, Attachment 2 discusses the current strategy and risk perspective of each Table 3.3-16 item considering current compensatory measures listed in the existing DSA (DSA sections in Chapter 4 discuss the acceptability of the existing facility configurations and controls given the recognized vulnerabilities). The approach strategy described in Attachment 2 has been reviewed and concurred with by the DOE and demonstrates adequacy at this time of existing controls versus the cost of gap resolution identified. Generically, priorities for funding have been active material at risk reduction actions versus high cost upgrades where adequate safety measures currently exist to address the vulnerabilities.

Beyond the information listed in Attachment 2 associated with Table 3.3-16, there are numerous ongoing maintenance replacement and equipment upgrades that improve the reliability of existing systems. For example, many waste tank ventilation systems are Safety Class for flammable vapor control. On going modifications to the waste tank ventilation systems include such items as:

- carbon steel/degraded ventilation duct replacement with new stainless steel piping
- instrument line upgrades to stainless steel with improved sloping to reduce moisture trapping in the tubing

AUG 2 9 2007

- modifications to belt driven fans to improve reliability, replacement of safety class fan motors with severe duty, high efficiency, low vibration motors
- fan replacements with fans meeting more robust equipment specifications.

WSRC, in concert with DOE, perform ongoing system reliability reviews for the existing equipment. These reviews are resulting in upgrades to the existing systems as configured to improve reliability, maintainability, and availability. Many of these identified improvements are being implemented using operating/small project funding while major upgrades as detailed in Table 3.3-16 continue to be evaluated.

- *Actions taken by both the Contractor and the Operations Office, to date, to secure funding in order to close the identified gaps.*

  - As discussed, numerous activities have been taken to address selected vulnerabilities and equipment reliability improvements since DSA development. Primary funding has occurred both through project activities as well as routine operating maintenance/small project funding. As has done in the past, funding for the needed gas release modifications will be addressed in project activities for waste removal as needed. WSRC will continue to assess and upgrade the existing system configurations for improved reliability where appropriate using operational/small project funding. In addition, WSRC with DOE will continue to assess the need for, and the relative priority of the modifications identified in Table 3.3-16 annually. Beyond previous discussions, none of the major modifications listed were judged in this year's annual update to provide significant risk benefit to pursue due to such considerations as mission plans, existing DSA controls, and upgrade costs. The position of implementation will be reviewed annually per DOE direction to secure appropriate project funding based on the assessment results.

In summary, selected activities have been funded and implemented to address/prevent additions to Table 3.3-16. Existing system status and modification activities are jointly understood and agreed upon by WSRC and DOE. Activities to improve system performances and to address vulnerabilities will be done in concert with the DOE annually considering mission plans to continue active waste removal operations reducing material at risk, adequacy of existing DSA controls, upgrade costs.

This information was discussed with Donald Blake and Thomas Temple of the Waste Disposition Engineering Division.

If you have any further questions, please call me at (803) 208-1827.

Sincerely,

Richard L. Salizzoni
Tank Farm Chief Engineer

Enclosures:

LWO-LWE-2007-00188, Attachment 1, Table 3.3-16 and Supporting Text
LWO-LWE-2007-00188, Attachment 2, WSRC Memorandum LWO-LWE-2007-00042

LWO-LWE-2007-00188

Attachment 1

Table 3.3-16

and

Supporting Text

[Copied from CSTF DSA, Chapter 3, Section 3.3.3, pages 3.3-23 and 3.3-24]

3.3.3.3.1 PLANNED DESIGN AND OPERATIONAL SAFETY IMPROVEMENTS

The CSTF was constructed between the early 1950s and mid 1990s. As such, many of the systems were not built to the latest design standards and in some instances there are not sufficient controls to prevent or mitigate all the accidents discussed in Section 3.4. Table 3.3-16 discusses the modifications recommended for DOE approval to improve/achieve compliance with the design standards and ensure sufficient controls for each of the accidents. This DSA, including mitigated consequences, does not credit or account for any of these improvements. The consequences quoted in this chapter credit the currently installed equipment for preventing or mitigating the given accident scenarios (i.e., no credit is given to the proposed improvements). This Section (3.3.3.3.1) is not required to be evaluated against while performing USQ reviews, except for the "Currently Credited Control(s)" as presented in Table 3.3-16. These improvements are being pursued in accordance with DOE Order 413.3 (Ref. 35). When these modifications are installed, the DSA will be revised to account for the new equipment.

[Copied from CSTF DSA, Section 3.6, Pages 3.6-170, 171, 172]

Table 3.3-16 Planned Equipment Upgrades

Proposed Improvement Description	**Functional Classification**	**DBA DSA Section(s)**	**Currently Credited Control(s)**	**DSA Sections Addressing Vulnerability of Existing Control(s)**	**Justification for Proposed Improvements**
Pump Tank Ventilation with flow interlocks supplied by Diesel Generator power to prevent Pump Tank Explosions	SS	3.4.2.8	Pump Tank Ventilation System and supporting Diesel Generator	4.4.9 4.4.10 4.4.11	2, 3, 4
Loss of Power Alarm in Control Room for Leak Detection Conductivity Probes	SS	3.4.2.7 3.4.2.9	Conductivity probes	4.4.4 4.4.13 4.4.7 4.4.28 4.4.8 4.4.30	2, 4
Automatic Isolation of incoming waste streams to Pump Tanks upon high level in Pump Tank to prevent Pump Tank Overflow	SS	3.4.2.9	PP sump conductivity probe alarm and operator action	3.4.2.9	2, 5
Siphon breakers in CRW supply/return headers for Waste Tanks 39, 40, and 51	SC	3.4.2.15	Prohibited activities: 1. Operation of waste tank mixing devices in Waste Tank 39 2. Sludge slurry transfers out of Waste Tanks 32 & 35	3.4.2.15	1, 2, 3, 4, 5

Table 3.3-16 Planned Equipment Upgrades

Proposed Improvement Description	Functional Classification	DBA DSA Section(s)	Currently Credited Control(s)	DSA Sections Addressing Vulnerability of Existing Control(s)	Justification for Proposed Improvements
Interlocks (with alarms) which stop transfers upon identification of a leak from the primary containment. The interlocks shall minimize the quantity of leaked material and provide indication to ensure operator actions to prevent buildup of flammable vapors in secondary containments	SS	3.4.2.6 3.4.2.7 3.4.2.9	Leak detection in secondary containment and operator action	4.4.4 4.4.13 4.4.7 4.4.28 4.4.8 4.4.30	2, 3, 4, 5
Passive ventilation for pump tanks, pump pits, VBs, DBs to prevent explosions from leaked material into the boxes. Passive ventilation should be sized to address dissolved and trapped gas release and radiolytically generated hydrogen	SS	3.4.2.7 3.4.2.8	Active pump tank/PP ventilation system	4.4.9 4.4.10	2, 3, 4, 5

Table 3.3-16 Planned Equipment Upgrades

Proposed Improvement Description	Functional Classification	DBA DSA Section(s)	Currently Credited Control(s)	DSA Sections Addressing Vulnerability of Existing Control(s)	Justification for Proposed Improvements
Waste tank ventilation upgrades including flow instrumentation and interlocks, seismic qualification, and backup power, for Waste Tanks which become flammable in 7 days following a seismic event	SC	3.4.2.11	Waste tank ventilation system	4.3.12	2, 3, 4, 5, 6
NPH qualification of buildings and structures supporting safety related equipment	SC	3.4.2.18	Event Response Program	3.4.2.18	2, 4

BENEFIT NOTES:

1. Reduces consequences to within EGs
2. Eliminates operator intense controls
3. Brings controls in compliance with DOE Order 420.1A (Ref. 18) design requirements
4. Overcomes major equipment vulnerabilities
5. Brings control scheme for affected scenarios in compliance with DOE-STD-3009 (Ref. 4) control selection hierarchy (preventor over mitigator, passive over active, SSCs over administrative control, etc.)
6. Reduces time at risk

LWO-LWE-2007-00188

Attachment 2

WSRC Memorandum

LWO-LWE-2007-00042

February 15, 2007

LWO-LWE-2007-00042
RSM Track #: 10048

TO: R. L. SALIZZONI, 703-H

FROM: T. L. ORTNER, 703-H

ANNUAL REVIEW OF DOCUMENTED SAFETY ANALYSIS (DSA) TABLE 3.3-16 EQUIPMENT MODIFICATIONS

References:

1. DOE Letter DC-03-006, from C. A. Hansen to W. J. Johnson, "Implementation Plan for Equipment Modifications Identified in the Concentration, Storage, and Transfer Facilities (CSTF) Documented Safety Analysis (DSA)," September 11, 2003
2. WSRC-SA-2002-00007, "Concentration, Storage, and Transfer Facility Documented Safety Analysis," Revision 6, October 2006

This memorandum documents the results of the assessment that we completed concerning the continued need for, and the relative priority of, the modifications identified in DSA Table 3.3-16. An additional consideration in this assessment was the continued effectiveness and reliability of the control sets for those accidents associated with these modifications. The assessment of these modifications satisfies direction received by DOE in Reference 1.

The assessment process was performed by the designated Tank Farm Engineering DSA Subject Matter Experts (i.e., those engineers assigned responsibility for each accident) for those accident analyses associated with the Table 3.3-16 modifications. The criteria used in this assessment are provided in Attachment 1. The following conclusions are based upon the results of the assessment:

- No Table 3.3-16 modifications can be deleted nor should any of their identified functions be changed
- Our operating experience with the existing controls identified in Table 3.3-16 continue to demonstrate that these controls are adequate and that no changes in priority are warranted
- Although planning assumptions have changed, these changes have no affect on the modification prioritization

The following changes to Table 3.3-16 and its associated implementation plan are recommended based upon the results of this assessment.

Change to DSA Table 3.3-16

Revise the "Currently Listed Control(s)" information for the Tank 39, 40, and 51 siphon break modification to be consistent with the controls credited in the DSA. The scope of this modification was revised in last year's annual update, but the "Currently Listed Control(s)" information was not changed. The Tank 39, 40, and 51 siphon breaker modification is proposed to provide a Safety Class means of preventing a siphon out of these tanks to reduce the mitigated consequences of a Waste Tank Siphon/Pump-Out accident event. This modification will be needed when the sludge removal

operations are conducted in Tanks 32, 35, and 39. The current controls for these tanks prohibits mixing device operation in Tank 39 (TSR AC 5.8.2.43.r) and the transfer of sludge slurry out of Tanks 32 and 35 (TSR AC 5.8.2.43.s). The change to Table 3.3-16 for this modification refers to these prohibited activities as the current controls. This proposed change was not reviewed via the Safety Input Review Committee process since this change is editorial in nature.

Changes to Implementation Plan

1. Revised Rough Order of Magnitude cost estimate for the Pump Tank Ventilation Upgrades from $2,000,000 to $10,000,000 based upon cost estimate developed for a fully compliant Safety Significant ventilation system in support of the DNFSB 2004-2 evaluation of the Actinide Removal Process.

2. Revised Rough Order of Magnitude cost estimate for the Waste Tank Ventilation Upgrades from $5,000,000 to $10,000,000 range to $15,000,000 to $20,000,000 range based upon cost estimate developed for a fully compliant Safety Class ventilation system in support of the Tank 40/51 ventilation upgrade project.

3. Revised dates for Table 2 Planning Assumptions to be consistent with latest processing plans and updated associated references accordingly.

4. Deleted relative priority for Siphon Break modification (was Priority 3) to reflect the unique nature of this modification. It is required to support a specific future sludge batch and therefore, has no fixed relative priority. Adjusted remaining priorities to reflect change in Siphon Breaker modification priority.

You will find the following three attachments to this memorandum:

Attachment 1 – Table 3.3-16 Assessment Criteria

Attachment 2 – DSA Table 3.3-16 annotated with the proposed change described above. This change has been incorporated into the annual DSA update currently in the final review and approval process.

Attachment 3 – Implementation Plan for Long Term Equipment Modifications Identified in the CSTF DSA Table 3.3-16, Revision 2. This plan has been revised as described above.

This memorandum will be referenced in the upcoming annual DSA update submittal letter to DOE. In accordance with Reference 1, DOE will evaluate the proposed Table 3.3-16 change in their Safety Evaluation Report for the annual update submittal.

c:
L. D. Olson, 766-H
K. A. Hauer, 704-S
W. C. Clark, 704-56H
M. Borders, 704-26F
J. P. Schwenker, 703-H
E. J. Freed, 704-56H
C. W. Kirkland, 704-56H
G. N. Eide, 241-121H
D. A. Harris, 241-121H
D. W. Rochelle, 241-119H
M. J. Mahoney, 766-H
C. Cope, 703-H
S. M. Hall, 703-H
T. C. Temple, 707-H
D. J. Blake, 707-H

Attachment 1
DSA Table 3.3-16 Assessment Criteria

1. Have any facility modifications, DSA/TSR changes, or facility operating procedure changes been made that would eliminate or diminish the vulnerability that the Table 3.3-16 modification was intended to address? If so, can the modification be deleted from the table or can the function described be modified to reduce the scope of the modification (for scope definition see Table 1 of Attachment 2 in addition to Table 3.3-16)?

2. Evaluate our operating experience with the existing control set(s) that the modification in Table 3.3-16 was intended to address. Do we have sufficient experience to build and defend a position that we have never had any implementation/execution issues with the current control set and therefore can justify deleting the modification from the table? If we can't justify deleting the modification, is there at least enough data to justify lowering the relative priority of this modification in the Table 3.3-16 Implementation Plan? If the answer to both of these questions is no, does our experience indicate that we should increase the relative priority or modify the scope of this modification?

3. The Table 3.3-16 Implementation Plan identifies planning assumptions that were used in establishing the priorities for implementing the Table 3.3-16 modifications. Need to re-validate that these assumptions, as they impact a given modification, are still correct. If there is a change to any of these assumptions, does the change impact the assigned priorities? From a system planning perspective, are there any new assumptions that should be factored into the priority assignments?

Attachment 2
Proposed Table 3.3-16 Revision

Table 3.3-16 Planned Equipment Upgrades

Proposed Improvement Description	Functional Classification	DBA DSA Section(s)	Currently Credited Control(s)	DSA Section(s) Addressing Vulnerability of Existing Control(s)	Justification for Proposed Improvements
Pump Tank Ventilation with flow interlocks supplied by Diesel Generator power to prevent Pump Tank Explosions	SS	3.4.2.8	Pump Tank Ventilation System and supporting Diesel Generator	4.4.9 4.4.10 4.4.11	2, 3, 4
Loss of Power Alarm in Control Room for Leak Detection Conductivity Probes	SS	3.4.2.7 3.4.2.9	Conductivity probes	4.4.4 4.4.13 4.4.7 4.4.28 4.4.8 4.4.30	2, 4
Automatic Isolation of incoming waste streams to Pump Tanks upon high level in Pump Tank to prevent Pump Tank Overflow	SS	3.4.2.9	PP sump conductivity probe alarm and operator action	3.4.2.9	2, 5
Siphon breakers in CRW supply/return headers for Waste Tanks 39, 40, and 51	SC	3.4.2.15	~~Cooling coils, siphon breaks~~	3.4.2.15	1, 2, 3, 4, 5

Add

Prohibited activities:
1. operation of waste tank mixing devices in Waste Tank 39
2. Sludge Slurry transfers out of Tanks 38 & 35

Attachment 3
Implementation Plan for Long Term Equipment Modifications
Identified in CSTF DSA Table 3.3-16 – Revision 2

Table 1 - Proposed Categories of Modifications

1. Pump Tank Ventilation Upgrades

Currently Credited Controls: Non-NPH Pump Tank ventilation (including HDB-8 diesel generator) and portable ventilation installed prior to certain transfers, confinement, and operator response in the event of a ventilation failure

Scope of Equipment Modification: Extensive modifications, including (1) evaluate existing Pump Tank ventilation systems, including Diesel Generators, and associated electrical distribution against PC-2 seismic design criteria to identify needed modifications; (2) install SS ventilation flow sensing device and associated interlock to terminate transfers (waste and water) on low flow (PC-2 qualified); and (3) evaluate best means to terminate incoming transfers and design/install accordingly (e.g., add automatic isolation valve in transfer path into Pump Tank tied to low ventilation flow interlock).

Rough Order of Magnitude Cost: $10,000,000 per Pump Tank / Pump Pit/ Diversion Box complex (single ventilation system and diesel generator serves entire complex) except for HDB-8. Cost estimate based upon estimate developed for a fully compliant Safety Significant ventilation system in support of the DNFSB 2004-2 evaluation of the Actinide Removal Process. In HDB-8, $1,000,000--ventilation system has already been upgraded, so only the flow sensing and interlock portions of the project would need to be implemented.

2. Leak Detection (Conductivity Probe) Loss-of-Power Alarms

Currently Credited Controls: TSR surveillance to verify conductivity probes are working for High-Rem transfers. Periodic functional checks under the Preventive Maintenance program for Low-Rem transfers.

Scope of Equipment Modification: Replace conductivity probe (CP) relays with "failsafe" relays that initiate a control room alarm on loss of power to the relay.

Rough Order of Magnitude Cost: $2,000 per CP

3. Pump Tank Overflow Protection

Currently Credited Controls: Pump Tank and Pump Pit CP alarms (note these already have loss-of-power alarms), operator response to these alarms, and confinement

Scope of Equipment Modification: (1) Install SS Pump Tank level sensing device and associated interlock to terminate transfers (waste and water) into the Pump Tank on high level. (2) Evaluate best means to terminate incoming transfers and design/install accordingly (e.g., add automatic isolation valve in transfer path into Pump Tank tied to high level interlock). Coordinate this modification with the Pump Tank low flow interlock modification so that the same transfer isolation device can be used for both conditions.

Rough Order of Magnitude Cost: $200,000 per Pump Tank (assumes that isolation device will be added as part of pump tank ventilation modification, i.e. Category 1)

4. Chromate Cooling Water Siphon Breakers

Currently Credited Controls: Cooling coils, siphon breaks, operator response and isolation valves

Scope of Equipment Modification: Install Safety Class, PC-3 seismically qualified siphon breakers to provide siphon prevention/mitigation for Waste Tanks 39, 40, and 51.

Rough Order of Magnitude Cost: $250,000

Table 1 - Proposed Categories of Modifications

5. Transfer Facility Leak Detection Interlocks

Currently Credited Controls: Core pipe, CP alarms, operator response
Scope of Equipment Modification: (1) Modify CP loops to provide interlock action to terminate transfers through transfer facility/annuli upon detection of leak. (2) Evaluate best means to terminate transfers and design/install accordingly (e.g., add automatic isolation valve in transfer path(s) associated with CP loops).
Rough Order of Magnitude Cost: $1,000,000 for each High-Rem transfer path

6. Transfer Facility Passive Vents

Currently Credited Controls: Core pipe, active/passive ventilation, CP alarms, operator response, confinement
Scope of Equipment Modification: Evaluate passive ventilation sizing for Diversion Boxes, Valve Boxes, and Pump Pits and design/install accordingly
Rough Order of Magnitude Cost: $500,000 per location (e.g., tank, pit, DB, etc.)

7. Waste Tank Ventilation Upgrades (for waste tanks which become flammable within 7 days following a seismic event)

Currently Credited Controls: Non-NPH Waste tank ventilation, Hydrogen monitoring, confinement, portable ventilation (requires operator response)
Scope of Equipment Modification: Extensive modifications, including (1) providing SC (redundant) fans/motors, low flow sense and command instrumentation to interlock off mixing devices, transfer devices, and liquid addition valves; (2) providing SC (redundant) diesel generator backup power supplies and 1E electrical distribution system with qualified isolation devices between normal/backup power supplies; and (3) qualify/protect (II/I) ventilation system and backup power supply for PC-3 seismic design criteria. These modifications are intended to minimize the time at risk (i.e., minimize the time that the tank vapor space is at or above LFL) following a seismically-induced trapped gas release for those tanks that can become flammable within seven days following a seismic event.
Rough Order of Magnitude Cost: $15,000,000 to $20,000,000 per tank (Cost estimate based upon estimate prepared for a fully compliant Safety Class ventilation system in support of the Tank 40/51 ventilation upgrade project)

8. NPH Qualification of Safety-Related Structures

Currently Credited Controls: Operator response
Scope of Equipment Modification: Evaluate NPH capability of structures and options to provide the required level of protection (modify structure, build new structure, etc.).
Rough Order of Magnitude Cost: Will vary widely depending on the structure. An ROM cost for upgrading all applicable structures is $30,000,000 – $60,000,000

Attachment 3
Implementation Plan for Long Term Equipment Modifications
Identified in CSTF DSA Table 3.3-16 – Revision 2

Table 2 – Prioritized Listing of Equipment Modifications

Planning Assumptions for Table 2

1. F-Canyon receipts into FPT-2/3 are virtually non-existent past FY06 per Reference 1
2. H-Canyon receipts into HPT-5/6 are virtually non-existent past FY22 per Reference 1 (includes Decommissioning shutdown flows)
3. F-TF Sludge Slurry transfers to H-TF will continue through at least FY26 per Reference 2
4. F-TF bulk waste removal complete by FY26 per Reference 2
5. Receipts from H-Canyon are Low-Rem (the current Transfer Control Program Description Document does not require this, but intent is to do so in order to avoid excessive flushing)
6. The earliest sludge removal activities for Tanks 32, 35, and 39 will be in FY18as part of Sludge Batch 13 per Reference 2

References

1. CBU-PIT-2006-00070, "Disposition Processing Plan," Rev. 0, May 31, 2006
2. CBU-PIT-2005-00144, "Sludge Batch Plan," Rev. 1, July, 2006

Priority	Category	Location	Rationale for Priority Assignment
N/A[A]	Siphon Breakers	Tanks 39, 40 & 51	Required to support processing of sludge from Tanks 32, 35 and 39. Transfer of sludge from Tanks 32 and 35 is currently prohibited as is mixing operations in Tank 39 due to the lack of these siphon breakers. The earliest need date is estimated to in FY18 to support Sludge Batch 13.
1	Tank Ventilation Upgrade	Tanks 40 and 51	These tanks will have large sludge volumes and high H_2 generation rates in future sludge batches. Waste tank explosion consequences exceed offsite Evaluation Guidelines. Ventilation is 1st Level of Control (LOC).
2	Tank Ventilation Upgrade	Waste tanks that have or are projected to have Seismic time to LFL < 7 days at max fill limit (Other than Tanks 40 and 51)	Maintaining lower allowable fill limits to ensure 7 days post-seismic has System Plan impacts, especially in out-years. Waste tank explosion consequences exceed offsite Evaluation Guidelines. Ventilation is 1st LOC.
3	Pump Tank Ventilation Upgrade	HDB-8 Complex	HDB-8 complex involved in majority of future transfers throughout life of CSTF. Ventilation is 1st LOC.
4	Pump Tank Overflow Protection	HDB-8 Complex	HDB-8 complex involved in majority of future transfers throughout life of CSTF. Overflow prevention would be 1st LOC.

Attachment 3
Implementation Plan for Long Term Equipment Modifications
Identified in CSTF DSA Table 3.3-16 – Revision 2

Table 2 – Prioritized Listing of Equipment Modifications

Priority	Category	Location	Rationale for Priority Assignment
5	Pump Tank Ventilation Upgrade	FPT-1	FPT-1 involved in all future transfers from F-TF to H-TF. Transfer volumes much larger than receipts from H-Canyon so given slightly higher priority. Ventilation is 1st LOC.
6	Pump Tank Overflow Protection	FPT-1	FPT-1 involved in all future transfers from F-TF to H-TF. Transfer volumes much larger than receipts from H-Canyon so given slightly higher priority. Overflow prevention would be 1st LOC.
7	Pump Tank Ventilation Upgrade	HPT-5/6	These pump tanks used to receive H-Canyon transfers for remaining life of H-Canyon. Ventilation is 1st LOC.
8	Pump Tank Overflow Protection	HPT-5/6	These pump tanks used to receive H-Canyon transfers for remaining life of H-Canyon. Overflow prevention would be 1st LOC.
9	Leak Detection Interlocks	H-area above ground transfer lines	H-TF above ground lines are highest risk of any transfer lines. Leak detection is 2nd LOC.
10	Leak Detection Interlocks	H-area below ground lines (includes LDBs, VBs, DBs, PPs)	These locations will be used for sludge transfers, some of which will be High-Rem. Prioritize VBs and small DBs (including HPFP) since leaks into them can overflow quickly and can result in very short times to reach LFL. Leak detection is 2nd LOC.
11	Passive Vents	H-area Valve Boxes	These locations will be used for sludge transfers, some of which will be High-Rem. VBs have short times to reach LFL. Passive Vents would be 2nd LOC.
12	Passive Vents	H-area Diversion Boxes	Prioritize small DBs since have short times to reach LFL. Passive vent would be 2nd LOC.
13	Pump Tank Ventilation Upgrade	HDB-2 Complex	These pump tanks used to support sludge slurry transfers out of old style tanks. Ventilation is 1st LOC.
14	Pump Tank Overflow Protection	HDB-2 Complex	These pump tanks used to support sludge slurry transfers out of old style tanks. Overflow prevention would be 1st LOC.
15	Leak Detection loss of power alarm	Conductivity probes associated with 3H Control Room	Highest risk transfers controlled by this Control Room. Leak detection is 2nd LOC. This modification would ensure probe is fully functional; however, as stated in DSA, likelihood of experiencing localized undetectable loss of power to probe is remote.

Attachment 3
Implementation Plan for Long Term Equipment Modifications
Identified in CSTF DSA Table 3.3-16 – Revision 2

Table 2 – Prioritized Listing of Equipment Modifications

Priority	Category	Location	Rationale for Priority Assignment
16	Leak Detection loss of power alarm	Conductivity probes associated with 82H Control Room	Next highest risk transfers controlled by this Control Room. Leak detection is 2nd LOC. This modification would ensure probe is fully functional; however, as stated in DSA, likelihood of experiencing localized undetectable loss of power to probe is remote.
17	Leak Detection loss of power alarm	Conductivity probes associated with 28H Control Room	Next highest risk transfers controlled by this Control Room. Leak detection is 2nd LOC. This modification would ensure probe is fully functional; however, as stated in DSA, likelihood of experiencing localized undetectable loss of power to probe is remote.
18	Leak Detection loss of power alarm	Conductivity probes associated with 1H Control Room	Next highest risk transfers controlled by this Control Room. Leak detection is 2nd LOC. This modification would ensure probe is fully functional; however, as stated in DSA, likelihood of experiencing localized undetectable loss of power to probe is remote.
19	Passive Vents	H-area Pump Pits	Pump tank ventilation upgrade, pump tank overflow prevention upgrade, and large size result in lower priority. Passive vent would be 2nd LOC.
20	Pump Tank Ventilation Upgrade	FDB-4 Complex	These pump tanks used to support sludge slurry transfers out of old style tanks. Ventilation is 1st LOC.
21	Pump Tank Overflow Protection	FDB-4 Complex	These pump tanks used to support sludge slurry transfers out of old style tanks. Overflow prevention would be 1st LOC.
22	NPH Structures	3H Control Room	Highest risk transfers controlled by this Control Room.
23	NPH Structures	82H Control Room	Next highest risk transfers controlled by this Control Room.
24	NPH Structures	28H Control Room	Next highest risk transfers controlled by this Control Room.
25	NPH Structures	1H Control Room	Next highest risk transfers controlled by this Control Room.
26	NPH Structures	18F Control Room	Highest F-area risk transfers controlled by this Control Room.
27	NPH Structures	74F Control Room	Next highest risk F-area transfers controlled by this Control Room.
28	NPH Structures	1F Control Room	Next highest risk F-area transfers controlled by this Control Room.

Notes:
A. The siphon breaker modification is needed to support a specific sludge batch and therefore, has no fixed relative priority.

SAFETY EVALUATION REPORT
REVISION 0, SUPPLEMENT 19

FOR THE
SAVANNAH RIVER SITE

CONCENTRATION, STORAGE, AND TRANSFER FACILITIES (CSTF)

OPERATED BY WASHINGTON SAVANNAH RIVER COMPANY UNDER CONTRACT NO. DE-AC09-96SR18500

CSTF DOCUMENTED SAFETY ANALYSIS

WSRC-SA-2002-00007, Revision 4

AND

CSTF TECHNICAL SAFETY REQUIREMENTS

S-TSR-G-00001, Revision 2005-I

April 2006

Prepared by : _____
Donald J. Blake

Reviewed by: _____
Jean M. Ridley

Approved by: _____
Michael A. Mikolanis, Director
Engineering Division

THE OFFICE OF THE ASSISTANT MANAGER FOR WASTE DISPOSITION PROJECT
SAVANNAH RIVER OPERATIONS OFFICE
U.S. DEPARTMENT OF ENERGY

4.8 USQE Report

The Annual USQE Report for the period of December 2004 through February 2006 was also submitted as Attachment 2 to Reference 1. These evaluations were reviewed to ensure the proposed activities were clearly defined and evaluated against the DSA assumptions and requirements, sufficient information was included in the USQE to conclude the hazards associated with the proposed activities were thoroughly evaluated and documented, and the appropriate conclusion, including the need for DOE approval, was reached.

The majority of the USQ Evaluations are associated with changes that have been incorporated into this DSA/TSR Revision. The associated DSA/TSR change is referenced in the USQE Attachment to Reference 1. The following non-USQ Evaluations that did not result in a DSA/TSR change were reviewed and found to provide sufficient scope definition, adequate justifications and appropriate conclusions:

- Replacement of the 242-16F Evaporator Pot Via M-DCP-F-04003 (USQ-FTF-2004-00466, Rev. 0)
- Modular Caustic Side Solvent Extraction Unit (MCU) Design, Construction and Installation (TRC-WPT-2005-00182, Rev. 0)
    - Note that a DSA (and TSR change as necessary) will be provided to support actual startup and operation of MCU.
- Categorical Exclusion for Periodic Operational Impacts from Corrosion Control, Flammability Control, and Sludge Carryover Minimization Program (TRC-HTF-2003-00136, Rev. 2)

  This USQE was reviewed and approved by DOE via Reference 10 as required by DOE G423.1-1 and WSRC Manual 11Q, Procedure 1.05, Revision 6. Due to the revisions to the TSR administrative controls to identify specific administrative controls, this USQE will need to be revised prior to the implementation of this DSA/TSR revision. WSRC recognized this in Reference 1 and noted the revised USQE will be submitted for DOE approval.

4.9 Planned Equipment Upgrades

Reference 11 required WSRC to perform a periodic assessment of the equipment modifications identified in DSA Table 3.3-16 that would document the continued need for, relative priority of, and continued effectiveness and reliability of the control sets for these modifications. Reference 12 documented the results of an assessment performed in July/August 2005 and the changes to Table 3.3-16 resulting from this assessment. The assessment results and Table 3.3-16 changes were reviewed with and approved by the Safety Input Review Committee (SIRC). The following summarizes the proposed Table 3.3-16 changes:

- The passive siphon prevention loops for the chromate cooling water system was replaced with installation of safety class chromate cooling water header siphon breakers for Tanks 39, 40, and 51. This change reflects risk reduction already achieved with upgrading of siphon breakers for Tanks 29-32 and 35 to safety class as well as added prohibitions to prohibit slurrying Tank 39 sludge and transferring slurried sludge from Tanks 32 or 35 (since the slurried sludge would be transferred to Tanks 40/51 which do not have safety class siphon breakers installed). These changes were reviewed and approved by DOE in SER Revision 0, Supplement 17. The radionuclide concentration in Tank 39 is a significant contributor to

the dose consequence of a waste tank siphon event. Therefore, slurrying of sludge in Tank 39 is prohibited to prevent the settled sludge from becoming mobile and thus able to be siphoned from the tank. However, future sludge processing to remove the sludge from Tank 39 will be necessary. Thus, eventually safety class siphon breakers for Tank 39 will be necessary and are reflected in the revised Table 3.3-16. Since the slurried sludge in Tanks 32, 35, and 39 will be transferred to Tanks 40/51, siphon breakers for Tanks 40 and 51 (sludge preparation and DWPF feed tanks) will likewise be necessary and are reflected in the revised Table 3.3-16.

- Waste tank ventilation upgrade was revised to delete reference to the tornado qualification (not required by DSA Section 3.4.2.17 Tornado/High Wind Event) and add a justification for the modification to state it will reduce time at risk versus eliminate risk. WSRC has determined a modification to prevent the risk is physically impractical based on the required fan size and capacity (hundreds of thousands of scfm would be required to overcome the potential hydrogen release rate).
- DOE reviewed Table 2 Prioritized Listing of Equipment Modifications in Reference 12 and concluded the priority listing is appropriate. The highest priority items include the waste tank ventilation modifications which will minimize the time at risk for an explosion event that exceeds the offsite evaluation guidelines. The siphon breaker modifications for Tanks 39, 40, and 51 are also high priority based on the need to support future sludge batch preparation. Pump tank ventilation system upgrade and pump tank overflow protection are also identified as high on the priority list since pump tank explosion and overflow events are not currently prevented by the DSA.

DOE review of the changes made in DSA Table 3.3-16, as well as the prioritization of these modifications provided in Reference 12, found each to be appropriate and adequate.

4.10 Pump Tank Explosions due to Trapped Gas

During the course of this annual review, DOE noted neither DSA Section 3.4.2.8 for an individual pump tank explosion event nor DSA Section 3.4.2.18 for cumulative seismic events document why it is acceptable to allow the potential for a trapped gas release causing an explosion in the pump tank. The rationale for accepting this risk was reviewed and accepted by the SIRC during the DSA development. However, this rationale was not documented in the DSA or in the DOE SER Revision 0 (Reference 3). Therefore, the DOE basis for accepting this risk is as follows:

- For pump tanks with agitators, the pump tank is not expected to have trapped gas because an insignificant sludge heel develops.
- For pump tanks without agitators, but simultaneously transferred into/out of, agitation (from the force of material entering the pump tank and pump/jet suction for material exiting the pump tank) is sufficient to release most trapped gas due to discharge suction being very close to the pump tank bottom.
- For pump tanks that have sat idle for an extended period of time (includes receiving waste over period of time but not discharged out (e.g., Canyon receipt pump tanks), either the pump tank vapor space should not reach LFL due to trapped gas release or the consequences should involve supernate resulting in significantly less dose. DSA input (from Calculation S-CLC-G-00235) shows max sludge heel in pump tank is <20 inches. Thus, using the methodology of DSA Section 3.4.1.5.3, the amount of trapped gas would be 20 inches * 70 gal/inch * 0.10 bubbles * 0.75 H_2/bubble = 105 gallons of H_2. If the pump tank is at heel level, the vapor space is ~5810 gallons. If

7.0 References

1. Letter, Olson to Hansen, "Submittal of the Tank Farm Documented Safety Analysis (DSA) Annual Update," CBU-LWD-2006-00013, 2/24/06.
2. Letter, Allison to Pedde, "Letter of Direction for Defense Nuclear Facilities Safety Board (DNFSB) Recommendation 2002-3, Requirements for the Design, Implementation, and Maintenance of Administrative Controls", OESH-05-0129, 4/18/05.
3. Letter, Allison to Pedde, "DOE CSTF SER Rev. 0," PC-03-008, 12/20/2002
4. WSMS Memo, "CSTF DSA/TSR Specific Administrative Controls Evaluation", WSMS-LIC-M-06-0001, 2/17/06.
5. Letter, Olson to Everatt, "Modification of Tank Farm Documented Safety Analysis (DSA) Annual Update Extension Request", CBU-LWD-2006-00001, 1/10/06.
6. WSRC Memo, "Justification for Deleting Waste Tank Floating Control Program from TSR's", CBU-LTS-2005-00115, 4/14/05.
7. Calculation T-CLC-H-00309, Rev. 1, "H- and F-Area Flotation Evaluation".
8. WSRC Memo, "Justification for Deletion of Administrative Control Program 5.8.2.28 Diesel Power Operations", CBU-LTS-2005-00253, 5/31/05.
9. NCSE N-NCS-H-00188, Rev. 0, "Nuclear Criticality Safety Evaluation: Chemical Cleaning of the 242-16H Evaporator (U)", January 2006.
10. Letter, Allison to Pedde, "Submittal of CSTF Categorical Exclusion, (Letter, Olson to Hintze, CBU-LWD-2005-00048, 12/20/05)", WDED-06-17, 2/7/06.
11. Letter, Hansen to Johnson, "Implementation Plan for Equipment Modifications Identified in the Concentration, Storage, and Transfer Facilities (CSTF) Documented Safety Analysis (DSA)", 9/11/03.
12. WSRC Memo, Ortner to Little, "Annual Review of DSA Table 3.3-16 Equipment Modifications", CBU-LTS-2006-00050 dated 2/21/06.
13. Letter, Olson to Spears, "Tank Farm Implementation of the Technical Safety Requirements Annual Update", LWO-2006-0004, 4/14/06.
14. Memorandum, Jessie Roberson (EM-1), to multiple addressees, "Supplemental Environmental Management (EM) Guidance for Implementing 10 CFR 830, Subpart B, Safety Basis Requirements", dated May 28, 2002.
15. DOE-HDBK-1169-2003, "DOE Handbook - Nuclear Air Cleaning Handbook," November 2003.

8.0 Contributing Reviewers

Norm Shepard (AMNMSP) – Evaporator NCSE
Tom Temple (WDED) – SAC Development; Various DSA/TSR Sections

SAFETY EVALUATION REPORT
REVISION 1

FOR THE
SAVANNAH RIVER SITE

CONCENTRATION, STORAGE, AND TRANSFER FACILITIES (CSTF)

OPERATED BY WASHINGTON SAVANNAH RIVER COMPANY UNDER CONTRACT NO. DE-AC09-96SR18500

CSTF DOCUMENTED SAFETY ANALYSIS

WSRC-SA-2002-00007, Revision 7

CSTF TECHNICAL SAFETY REQUIREMENTS

S-TSR-G-00001, Revision 15

CSTF JUSTIFICATION FOR CONTINUED OPERATIONS

WSRC-TR-2003-00083, Revision 6

April 2007

Prepared by: _____
Donald J. Blake

Reviewed by: _____
Thomas C. Temple

Approved by: _____
Michael A. Mikolanis, Director
Engineering Division

THE OFFICE OF THE ASSISTANT MANAGER FOR WASTE DISPOSITION PROJECT
SAVANNAH RIVER OPERATIONS OFFICE
U.S. DEPARTMENT OF ENERGY

The maximum concentration of the salt solution feed material from 512-S ARP is protected through 2 independent cross flow metal filters. Based on this physical design feature at 512-S and the fact there is no means of transferring waste into MCU (no pump/jet/siphon potential), other than from 512-S, MCU has been designated as a HC-3 segment of the H-Area Tank Farm. This segmentation is consistent with DOE-STD-1027-92. Additionally, WSRC evaluated (in Reference B.18) the potential for process upset conditions within MCU that have the potential to concentrate the Cs-137 in the strip effluent stream more than the maximum design value of 15X and thus challenge the hazard category threshold values. The conclusion reached was that there are numerous engineered features (e.g., flow alarms and interlocks, high level alarms, gamma monitors/alarms, etc.) and administrative controls to detect upset conditions, and even if these features/controls were to all fail, it would take > 44 hours operating at the extreme strip effluent cesium concentration before an inventory could be reached that would challenge the hazard category threshold. Based on DOE review of these evaluations, DOE concludes it is acceptable to categorize MCU as a HC-3 segment of the H-Area Tank Farm.

The hazard identification and categorization of the CSTF was reviewed and found to be in alignment with DOE-STD-1027-92.

Based on DOE review, the criteria to identify and classify hazards has been met.

B.4 Criteria: DOE-STD-3009-94, para. 3.3.2.3.1, Planned Design & Operational Safety Improvements

Planned improvements not yet implemented are identified and the basis for committing to the improvement, and, if needed, any interim controls proposed until the improvement is implemented, is summarized.

Evaluation

DSA section 3.3.3.3.1 refers to Table 3.3-16, which identifies the planned equipment upgrades in the CSTF. Examples of the proposed upgrades include: pump tank ventilation with flow interlocks supplied by diesel generators to prevent pump tank explosions; loss of power alarm in the control room for leak detection conductivity probes; automatic isolation of incoming waste streams to pump tanks upon high pump tank level to prevent overflow; interlocks with alarms to stop transfers upon identification of a leak from the primary containment to minimize the quantity leaked and prevent buildup of flammable vapors in the secondary containment; passive ventilation for pump tanks/pits, valve boxes, and diversion boxes to prevent explosions due to leaked material; and waste tank ventilation upgrades including flow instrumentation and interlocks, NPH qualification, and backup power. Each of the planned upgrades in Table 3.3-16 refers to the DSA credited controls, which will be replaced and/or supplemented by the upgrades. The DSA does not credit any of these equipment upgrades in the mitigated accident consequences. The justification and/or benefits of the proposed upgrades are shown in Table 3.3-16, and include: reducing consequences to within EG's; eliminating operator controls; ensuring compliance with DOE O 420.1B design requirements; reducing/eliminating equipment vulnerabilities; complying with the control selection hierarchy (as defined in WSRC Manual E7, Procedure 2.25), and reducing time at risk. DOE review of the justifications given in Table 3.3-16 and/or the referenced DSA text concluded the risks posed by the vulnerabilities

were acceptable. In some cases, no controls were judged necessary prior to the planned upgrades being accomplished. For example:

a. leak detection conductivity probes in non-Pump Pit locations do not have loss of power alarms – this was justified in that the probes in these locations were only a 2nd level of control (1st level of control was passive core piping)

In some cases, additional controls were provided to minimize the risk. For example:

a. requiring backup ventilation on certain pump tanks for certain transfers and increased operator surveillance on installed ventilation system to ensure pump tank does not reach 100% LFL if installed ventilation system fails
b. limiting number of waste tanks to seven (7) which could reach 100% LFL in $\leq$ 24 hours from release of trapped hydrogen
c. prohibit the use of certain transfer lines until they are modified to have the requisite leak detection provisions

Modifications required to support implementation of the DSA were identified in Attachment 1 to Reference B.5. Those modifications were necessary to ensure credited equipment and assumptions in the mitigated accident analysis were protected. That attachment was reviewed and found to be comprehensive. Completion of those modifications was verified during routine assessment activities associated with implementation of the DSA and TSR.

In Reference B.21, DOE directed WSRC to develop a periodic assessment process to assess the continued need for and relative priority of the Table 3.3-16 proposed modifications as well as assess the continued effectiveness and reliability of the controls sets for accidents associated with these modifications. These assessments have been provided in conjunction with the annual updates each year. DOE reviews of the assessment results have been provided in the SERs for the subsequent annual updates. The assessment associated with DSA Revision 7 Annual Update was provided in Reference B.19. DOE agrees with the continued need for the modifications and the relative priorities assigned to the modifications.

Based on DOE review, the criteria to identify planned design and operational safety improvements has been met.

B.5 Criteria: DOE-STD-3009-94, para. 3.3.2.3.2, Defense in Depth

Significant aspects of defense-in-depth are summarized, and associated safety-significant SSCs and other items needing TSR coverage are identified and distinguished from SSCs contributing to Defense in Depth (DID). Facility design and administrative features of defense-in-depth are included.

Evaluation

DSA section 3.3.3.3.2 discusses defense-in-depth, and concludes that the SC features/controls identified in section 3.4.2, the safety significant features/controls identified in section 3.4.2 and Tables 3.3-13 through 3.3-15, and the non-safety features/controls identified in the HA provide sufficient defense in depth. Section 3.1.1 states there were no formal "non-SC/SS DID" items required to meet WSRC Manual E7, Procedure 2.25. A WSRC evaluation of the need for non-SC/SS DID was documented in Reference B.12. DOE assessment of the results of the DBAs in

B.12 References

B.1 Letter, Piccolo to Anderson, "Submittal of the Revised Safety Strategy for Preparation of the Consolidated CST Authorization Basis", HLW-2001-00164, 11/27/01

B.2 Letter, Anderson to Piccolo, "Safety Strategy for Preparation of the Consolidated Concentration, Storage, and Transfer Facility (CSTF) Safety Basis Documents to Meet 10CFR830", PC-02-012, 12/21/01

B.3 Calculation S-CLC-H-00858, Rev. 2, "Hazard Analysis for the CST Facility"

B.4 Memorandum, Gough to DBA File, 2/15/95, Software Quality Assurance & Software Management Report for MACCS Version 1.5.11.1, ECS-DBA-95-0040

B.5 Letter, Piccolo to Anderson, "Submittal of Concentration, Storage, and Transfer Facility Documented Safety Analysis and Technical Safety Requirements for DOE Approval," HLW-2002-00086, 6/27/02

B.6 Memo, Black (EH-53) to Argonne Group Manager, 8/12/98

B.7 Letter, Schwallie to Fiori, "Improvement in Safety Documentation," 12/1/93

B.8 Hertzberg and Cashdollar, "Flammability Behavior and Pressure Development of Hydrogen Mixtures in Containment Volumes," 2nd International Topical Meeting on Nuclear Reactor Thermal Hydraulics, Santa Barbara, CA, 1983

B.9 Zabetakis, "Safety With Cryogenic Fluids," Plenum Press, New York, 1967

B.10 Billy W. Marshall, Jr., "Hydrogen: Air: Steam Flammability Limits and Combustion Characteristics in the FITS Vessel," NUREG/CR-3468, SAND84-0383, Rev. 3, 12/86

B.11 Memorandum, Temple to Mikolanis, "CSTF 10CFR830 Documented Safety Analysis (DSA) Comparisons With Hanford and SRS H-Canyon," 12/17/02

B.12 WSRC-TR-2002-00285, Rev. 0, "CST DSA Defense-in-Depth Evaluation," November 2002

B.13 Letter, Fiori to Schwallie, 11/21/95, DWPF SER Rev. 0

B.14 Letter, Sjostrom to Oakland, 1/14/98, Authorization Basis Implementation Documents

B.15 Letter, Piccolo to Anderson, "Submittal of Changes to the Concentration, Storage, and Transfer Facilities Documented Safety Analysis and Technical Safety Requirements with DOE for Approval," HLW-2002-00164, 12/11/02

B.16 Letter, Widmayer to Temple, "Review of Engineering Calculations to Support DOE Review of the CSTF 10 CFR 830 Safety Basis Upgrades (Technical Support Services – RTP 46)," 8/28/02

B.17 WSRC-TR-2006-00404, Revision 0, "Consolidated Hazard Analysis for the Concentration, Storage, and Transfer Facilities," February 2007.

B.18 U-ESR-H-00064, Revision 1, "Evaluation of the Impacts to the Hazard Categorization of MCU due to Increased Cesium Concentrations in the Strip Effluent Stream," 9/12/06.

B.19 WSRC Memo, Ortner to Salizonni, "Annual Review of Documented Safety Analysis (DSA) Table 3.3-16 Equipment Modifications," LWO-LWE-2007-00042, 2/15/07.

B.20 G-TC-H-00041, Revision 7, "Task Requirements and Criteria Modular Caustic Side Solvent Extraction (CSSX) Unit," August 14, 2006.

B.21 Letter, Allison to Pedde, "Concentration, Storage, and Transfer Facilities (CSTF) Safety Evaluation Report (SER) for the 10CFR830 Compliant Documented Safety Analysis (DSA) and Technical Safety Requirements (TSR's)," PC-03-008, 12/20/02.

B.22 Letter, Anderson to Piccolo, "Liquid Radioactive Waste Handling Facilities (LRWHF) Safety Evaluation Report (SER) Revision 1," 7/13/01.

DOE F 1325.8

United States Government **Department of Energy (DOE)**

memorandum

Savannah River Operations Office (SR)

DATE: JUN 0 1 2007

REPLY TO ATTN OF: TSD (Mark A. Smith, 803-952-9613)

SUBJECT: Request for Concurrence with Recommendation of the Defense Nuclear Facilities Safety Board (DNFSB) 2004-2 Equivalency Report for the Tank Farm Waste Tank and Transfer Facility Ventilation System Evaluation

TO: Dae Y. Chung, Deputy Assistant Secretary for Safety Management and Operations (EM-60), HQ

Please find attached the equivalency report for the Tank Farm Waste Tank and Transfer Facility Ventilation System that summarizes the evaluations performed in support of the development of the Documented Safety Analysis (DSA) for the Tank Farm facilities and assesses their equivalency relative to those evaluations required by DOE in response to DNFSB Recommendation 2004-2.

This report concludes that the evaluations performed for, and documented in, the DSA for the Primary Waste Tank, Waste Tank Annulus, and Transfer Facility ventilation systems adequately satisfy those required by DNFSB Recommendation 2004-2 such that no further reviews are necessary for these facilities. This information has been reviewed and endorsed by both DOE-SR and Washington Savannah River Company (WSRC) facility personnel and an independent team of DOE-SR and WSRC personnel.

The submittal of this equivalency report is consistent with the 2004-2 Ventilation System Evaluation Guidance Addendum, issued by DOE to the DNFSB on March 6, 2007. The Addendum addresses situations where it is appropriate to utilize an exisiting study that can be demonstrated to meet the objectives of the 2004-2 evaluation.

Your concurrence with this recommendation is requested by June 31, 2007, in order to support the overall implementation plan schedule.

If you have any questions, please contact me or have your staff contact Mark A. Smith at 803-952-9613.

Jeffrey M. Allison
Manager

TSD:MAS:sl

OSQA-07-0067

Attachment:
DNFSB 2004-2 Tank Farm Waste Tank
and Transfer Facility Ventilation System
Evaluation Equivalency Report

cc w/attachment:
Inés R. Triay (EM-3), HQ
Percy Fountain (EM-3.2), HQ
R. Nelson (EM-60), HQ

SRS SITE EVALUATION TEAM CONCURRENCE
DNFSB 2004-2
Equivalency Report

Facility: Equivalency Report for the Tank Farm Waste Tank and Transfer Facility Ventilation System Evaluation. WSRC Letter LWO-LWE-2007-00081, dated 4/11/07.

Reference:

1. Commitment 8.6.3 of DNFSB 2004-2 Implementation Plan Revision 1, dated July 12, 2006

2. Ventilation System Evaluation Guidance for Safety-Related and Non-Safety-Related Systems, dated January 2006, Revision 0.

In accordance with the References above, the SRS Site Evaluation Team has reviewed and concurs with the submittal of the attached DNFSB 2004-2 Equivalency Report for the Tank Farm Waste Tank and Transfer Facility Ventilation System Evaluation.

Site Evaluation Team (SET) Concurrence:

Signature on file	5/7/07
Mark A. Smith, DOE-SR, Site Lead for SET	Date
Signature on file	5/7/07
Ken W. Stephens, WSRC Lead for SET	Date

SRS Site Evaluation Team consists of the following personnel:

DOE Site Lead and SET Chairman (Mark A. Smith, OESH/SRPD)
DOE Alternate Site Lead & Safety Basis SME (Donald J. Blake, AMWDP/WDED)
DOE Ventilation System and Natural Phenomena Hazards SME (Brent J. Gutierrez, AMWDP/WDED)
WSRC 2004-2 Site Lead Ken W. Stephens(TQS/Engineering Standards Mgr.)
WSRC Alternate Site Lead & Safety Basis SME (Andrew M. Vincent, TQS/Nuclear Safety Department Mgr.)
WSRC Ventilation System SME (Scott J. MacMurray, SRNL Facility Engineering)
WSMS Safety Basis SME (Robert R. Lowrie)
WSRC SET Administrative Assistant (Barbara A. Pollard, Nuclear Safety Dept.)

SAVANNAH RIVER SITE
Aiken, SC 29808 • www.srs.gov

APR 11 2007

LWO-LWE-2007-00081

Carl Everatt, Director
Office of Safety and Quality Assurance
DOE, Savannah River Operations Office
P.O. Box A
Aiken, SC 29802

Dear Mr. Everatt:

Subject: Defense Nuclear Facilities Safety Board (DNFSB) Recommendation 2004-2 Tank Farm Waste Tank and Transfer Facility Ventilation System Evaluation Equivalency Report

This letter transmits the subject report. This report summarizes the evaluations performed in support of the development of the Documented Safety Analysis (DSA) for the Tank Farm facilities and assesses their equivalency relative to those evaluations required by the Department of Energy (DOE) in response to DNFSB Recommendation 2004-2. The unmitigated accident analyses performed for the DSA served as the basis for the identification of required Safety Class (SC) and Safety Significant (SS) functions. In many cases, these required SC/SS functions were assigned to existing Tank Farm structures, systems and components (SSCs). Formal backfit analyses were performed to assess the capability of the existing SSCs to satisfy the required SC/SS functions and associated SC/SS design criteria. Vulnerabilities (i.e., gaps) identified during the backfit process were evaluated using a structured vulnerability assessment and disposition process. The results of the backfit and vulnerability evaluations are documented directly in the DSA and have been approved by the DOE.

This report concludes that the evaluations performed for, and documented in, the DSA for the Primary Waste Tank, Waste Tank Annulus, and Transfer Facility ventilation systems adequately satisfy those required by the DOE for DNFSB Recommendation 2004-2 such that no further reviews are necessary for these facilities. Furthermore, based upon the evaluations performed during the DSA development effort, the documentation of these evaluations within the DSA, and the requirement to prepare and submit to the DOE an annual report on the proposed facility upgrades identified in DSA Table 3.3-16, it is recommended that no facility modifications be made at this time. No additional beneficial upgrades or modifications were noted beyond those listed in Table 3.3-16. The existing Table 3.3-16 Implementation Plan adequately identifies the prioritization of system upgrades as funds become available.

The DNFSB Recommendation SRS Site Evaluation Team has reviewed and concurred with information in this submittal.

Sincerely,

Richard Salizzoni

Richard Salizzoni, Chief Engineer
Tank Farm

4/11/07
Date

Distribution:
M. A. Smith, 730-B
D. J. Blake, 707-H
K. W. Stephens, 730-4B
I. W. Lewis, 766-H
W. B. Van Pelt, 766-H
T. L. Ortner, 235-H
B. E. Neely, 241-119H
E. J. Freed, 704-56H
G. N. Eide, 241-121H
D. G. Harris, 241-121H
C. D. Cope, 703-H

M-ESR-G-00030
Revision 0

DNFSB RECOMMENDATION 2004-2

SAVANNAH RIVER SITE
TANK FARM FACILITIES

Waste Tank and Transfer Facility Ventilation System Evaluation Equivalency Report

April 2007

Review and Approval

Prepared By:

Terry L. Ortner, LWO Safety Basis Engineering — 4-9-07 Date

Reviewed By: Tank Farm Facility Evaluation Team

Gerry N. Eide, Tank Farm Engineering — 04/10/07 Date

David G. Harris, Tank Farm Engineering — 4/10/07 Date

SH for Bill Matthews

Chris D. Cope, Washington Safety Management Solutions — 4/10/07 Date

Donald J. Blake, DOE Safety System Oversight — 4/10/07 Date

Approved By:

Richard L. Salizzoni, Tank Farm Chief Engineer — 4/11/07 Date

Table of Contents

Review and Approval i
Table of Contents ii
List of Figures iii
Acronyms iv
Definitions vi
1.0 Executive Summary 1
2.0 General System Design and Operation Overview 1
2.1 Waste Tanks 2
2.1.1 Waste Tank Design 3
2.1.2 Primary Waste Tank Ventilation Systems 4
2.1.3 Annulus Ventilation Systems 6
2.2 Transfer System Facilities 6
2.2.1 Diversion Boxes 7
2.2.2 Pump Pits/Pump Tanks 8
2.2.3 Diversion Box/ Pump Tank/Pump Pit Ventilation Systems 9
3.0 DSA Development 10
3.1 Summary of Accident Analyses 11
3.1.1 Primary Waste Tanks 11
3.1.2 Waste Tank Annuli 13
3.1.3 Diversion Boxes 15
3.1.4 Pump Tanks 16
3.1.5 Pump Pits 17
3.2 Control Selection 18
3.3 Functional Classification Assessment 19
3.3.1 Existing Classification 19
3.3.2 Evaluation 19
3.3.3 Summary 20
4.0 Backfit Analyses and Vulnerability Disposition 20
4.1 Backfit Analysis Process 20
4.2 Comparison of DNFSB 2004-2 Table 5.1 Performance Criteria to Tank Farm Backfit Analysis Design Requirements and TSRs 21
4.3 Vulnerability Assessment, Disposition, and Documentation 22
4.3.1 Vulnerability Assessment 22
4.3.2 Vulnerability Disposition 23
4.3.3 Vulnerability Documentation 23
4.4 Summary of Backfit Results 24
4.4.1 Primary Waste Tank Ventilation Systems 24
4.4.2 Waste Tank Annulus Ventilation Systems 25
4.4.3 Diversion Box/ Pump Tank/Pump Pit Ventilation Systems 26
5.0 Conclusions and Recommendations 28
5.1 Conclusions 28
5.2 Recommendations 29
6.0 References 29
7.0 Attachments 30

List of Figures

Figure 1 Type I Waste Tanks (Typical) 31

Figure 2 Type II Waste Tanks (Typical) 32

Figure 3 Type III/IIIA Waste Tanks (Typical) 33

Figure 4 Type IV Waste Tanks (Typical) 34

Figure 5 Primary Waste Tank Ventilation System (Typical) 35

Figure 6 Diversion Box and Pump Pit (Typical) 36

Figure 7 HDB-6 & 7 Ventilation Systems 37

Figure 8 Pump Tank/Pump Pit/Diversion Box Ventilation System (Typical) 38

Figure 9 HDB-8 PVV System 39

Figure 10 Tank Farm DSA Control Selection and Evaluation Process 40

Acronyms

ASME	American Society of Mechanical Engineers
CP	Conductivity Probe
CW	Collocated Worker
DB	Diversion Box
DBA	Design Basis Accident
DBE	Design Basis Earthquake
DBT	Design Basis Tornado
DNFSB	Defense Nuclear Facilities Safety Board
DOE	Department of Energy
DSA	Documented Safety Analysis
DR	Design Requirement
DWPF	Defense Waste Processing Facility
EG	Evaluation Guideline
ESP	Extended Sludge Processing
FDB	F-Area Diversion Box
FPP	F-Area Pump Pit
FPT	F-Area Pump Tank
FTF	F-Area Tank Farm
HA	Hazard Analyses
HDB	H-Area Diversion Box
HEPA	High Efficiency Particulate Air
HLLCP	High Liquid Level Conductivity Probe
HPP	H-Area Pump Pit
HPT	H-Area Pump Tank
HTF	H-Area Tank Farm
IDP	Inhalation Dose Potential
LEL	Lower Explosive Limit
LFL	Lower Flammability Limit
LPF	Leak Path Factor
MAR	Material at Risk
MCC	Motor Control Center
MOI	Maximally Exposed Offsite Individual
NPH	Natural Phenomena Hazard
PC	Performance Category
PMF	Probable Maximum Flood
PMP	Probable Maximum Precipitation
PP	Pump Pit
PT	Pump Tank
PTA	Pulse Tube Agitator
PVV	Process Vessel Ventilation
QA	Quality Assurance
SAC	Specific Administrative Control
SC	Safety Class
SIRC	Safety Input Review Committee
SMP	Submersible Mixing Pump
SRS	Savannah River Site
SS	Safety Significant

Acronyms (Continued)

SSCs	Structures, Systems, and Components
TSR	Technical Safety Requirements
WSRC	Washington Savannah River Company

Definitions

Confinement	A building, building space, room, cell, glovebox, or other enclosed volume in which air supply and exhaust are controlled, and typically filtered. (Ref. 11)
Confinement System	The barrier and its associated systems (including ventilation) between areas containing hazardous materials and the environment or other areas in the facility that are normally expected to have levels of hazardous material lower than allowable concentration limits. (Ref. 11)
Evaluation Guideline	Accident analysis consequence threshold used for the purposes of evaluating the need for preventive/mitigative controls and for establishing the functional classification of those controls. The consequences of interest in this report are radiological vice chemical. Additionally, the term "Evaluation Guideline" as used in this report includes the 25 rem value for the consideration of consequence to the public per DOE-STD-3009-94 (Ref. 6) (referred to as the Offsite Evaluation Guideline) as well as the 100 rem value for consideration of consequence to the collocated worker (at 100 meters) per Washington Savannah River Company Manual E7 Procedure 2.25 (Ref. 7) (referred to as the Onsite Evaluation Guideline).
Hazard Category	Hazard Category is based on hazard effects of unmitigated release consequences to offsite, onsite, and local workers. (Ref. 12)
Levels of Control	Where an Evaluation Guideline is challenged, a SC (Offsite) or SS (Onsite) control is identified as the primary preventive or mitigative control. In accordance with the guidance provide in Reference 7, additional SS levels of control may be identified that provide significant defense in depth.
Performance Category	A classification based on a graded approach used to establish the Natural Phenomena Hazard design and evaluation requirements for structures, systems, and components. (Ref. 13)
Ventilation System	The ventilation system includes the structures, systems, and components required to supply air to, circulate air within, and remove air from a building/facility space by natural or mechanical means. (Ref. 11)

1.0 Executive Summary

This report summarizes the evaluations performed in support of the development of the Documented Safety Analysis (DSA) for the Tank Farm facilities (Ref. 1) located at the Savannah River Site (SRS) and assesses their equivalency relative to those evaluations required by the Department of Energy (DOE) in response to Defense Nuclear Facilities Safety Board (DNFSB) Recommendation 2004-2 (Ref. 2, 3, 4). The unmitigated accident analyses performed for the DSA served as the basis for the identification of required Safety Class (SC) and Safety Significant (SS) functions. In many cases, these required SC/SS functions were assigned to existing Tank Farm structures, systems and components (SSCs). Formal backfit analyses were performed to assess the capability of the existing SSCs to satisfy the required SC/SS functions and associated SC/SS design criteria. Vulnerabilities (i.e., gaps) identified during the backfit process were evaluated using a structured vulnerability assessment and disposition process. The results of the backfit and vulnerability evaluations are documented directly in the DSA and have been approved by the DOE.

This report concludes that the evaluations performed for, and documented in, the DSA for the Primary Waste Tank, Waste Tank Annulus, and Transfer Facility ventilation systems adequately satisfy those required by the DOE for DNFSB Recommendation 2004-2 such that no further reviews are necessary for these facilities. Furthermore, based upon the evaluations performed during the DSA development effort, the documentation of these evaluations within the DSA, and the requirement to prepare and submit to the DOE an annual report on the proposed facility upgrades identified in DSA Table 3.3-16, it is recommended that no facility modifications be made at this time. The existing Table 3.3-16 Implementation Plan (Ref. 10) adequately identifies the prioritization of system upgrades as funds become available.

2.0 General System Design and Operation Overview

The basic processes performed in the Tank Farms include waste storage, waste transfer, and waste concentration. Processing in the Tank Farms includes those functions necessary to receive wastes from various generators while maintaining adequate storage space in the tanks for additional incoming wastes and to transfer those wastes to the disposal facilities. Waste storage includes conversion of liquid wastes to a more stable form for lower-risk storage by evaporation or settling. The waste streams handled in the Tank Farms are varied in composition and characteristics and can differ from tank to tank and by source of waste generation.

Waste is received through transfer facilities and into a waste tank from various sources as salt solution with some sludge slurry. Alkaline wastes are transferred to the appropriate storage tanks and high heat wastes are aged to allow decay of short-lived radionuclides. Lower heat waste has lower concentrations of radionuclides and does not require aging before evaporation. In storage, metal hydroxides and hydrated metal oxides settle as sludge to the bottom of the tank.

During waste storage, the major operational considerations are waste containment and control of hydrogen generation/accumulation in the transfer facilities and tanks. Various systems (level detection, leak detection, ventilation, radiological monitoring, temperature control/monitoring, etc.) are provided to maintain operational control of the waste tanks. In addition, administrative programs are implemented to monitor waste transfers, maintain the integrity of the waste tanks and associated equipment, and provide radiological protection to workers and offsite individuals.

Once the sludge in the waste has settled to the bottom of the tank, a region of supernate, composed principally of water and dissolved salts, remains above the sludge layer. To improve the safety of storage and maintain space for additional wastes, the supernate is evaporated. The concentrated supernate may crystallize to form a saltcake.

Waste removal includes the dissolution of salt, interstitial liquid removal from saltcake, and/or bulk sludge mixing. Following bulk waste removal, mounds or heels of sludge may remain, requiring spraying or the use of other methods to meet Federal Facilities Agreement requirements for quantities of remaining waste. After sufficient waste is removed, reducing grout is used to chemically stabilize and/or physically encapsulate incidental waste so that the potential for transport of contamination into the environment is reduced.

During salt dissolution, interstitial liquid removal from saltcake, and bulk sludge mixing, tank vapor space hydrogen concentration is of particular concern because of the potential for release of trapped gas. Various systems (hydrogen monitoring, ventilation, radiological monitoring, waste removal equipment, etc.) are provided to maintain operational control of waste removal operations. In addition, administrative programs are implemented to control mixing operation and dissolution operation to control trapped gas release.

Confinement systems include process vessels (e.g., primary waste tanks and Pump Tanks [PTs]), structures (e.g., Diversion Boxes [DBs] and Pump Pits [PPs]), and ventilation systems.

2.1 Waste Tanks

There are 51 large subsurface waste storage tanks in the Tank Farms. Twenty-nine of the tanks are in H-Area, and 22 are in F-Area. Two waste tanks (Tanks 17 and 20) have been closed and backfilled with grout. All of the waste storage tanks are built of carbon steel and reinforced concrete, but their designs differ. There are five types of waste tanks in the Tank Farms, designated as Type I, II, III, IIIA, and IV.

For tanks other than Type IV tanks, the carbon steel primary waste storage tank is attached to a concrete roof slab, which is supported by roof support columns, and supported on the bottom by a base slab and a working slab. These tanks are each provided with a carbon steel secondary containment, which provides a collection point for any primary tank leakage, a method for heating or cooling the primary tank wall in conjunction with the annulus ventilation system, and an area for expansion of the primary tank. For Type III and IIIA tanks, the secondary containment is a full-height annulus, while for Type I and II tanks; the secondary containment is a 5 foot high carbon steel pan. A reinforced concrete vault surrounding the secondary containment provides structural support and radiation shielding. Multiple riser openings provide access to the tank and annulus interiors and are used for inspections, steel taping, sampling, and the installation of equipment such as waste transfer pumps and jets, dip tubes, thermocouples, conductivity probes (CPs), ventilation, reel tapes, and flammable gas monitors. The primary tanks, other than Type IV tanks, are also equipped with the capability of cooling the waste with cooling coils submerged in the waste.

Reel tapes, radar devices, and conductivity probes, with associated alarms, are typically used to monitor the primary tank level. Tank annuli are equipped with CPs and dip tubes, with associated alarms, to monitor for leakage from the primary tank or from transfer piping traversing the annular space. Thermocouples are used to monitor the waste and tank wall temperatures. Waste tanks and waste tank annuli are monitored and ventilated. Waste tank ventilation exhaust is filtered and monitored to prevent

the dispersal of contamination. The following subsections provide specific salient features for each tank type as well as a summary of the primary and annulus waste tank ventilation systems.

2.1.1 Waste Tank Design

Type I Waste Tanks (Tanks 1 through 12)

The primary tank is 75 feet in diameter, and 24.5 feet in height with a maximum operating capacity of 0.75 million gallons. The cylindrical walls of the primary shell are welded to the flat top and bottom plates by curved knuckle plates. Twelve interior columns support the concrete roof slab. The annulus extends the full height of the tank and is formed by the concrete vault that is equipped with a carbon steel liner at the bottom. The liner serves as a secondary containment and is 5 feet high and 80 feet in diameter, with a capacity of approximately 22,000 gallons (to the top of the pan). The vault is covered by approximately 9 feet of earth that also provides radiation shielding.

Stainless steel waste transfer pipes are connected to the tanks. The pipes are enclosed in a carbon steel jacket pipe where they bridge across the tank annulus. Inlet pipes enter the primary tank through the top knuckle and either terminate in the vapor space or terminate in a submerged downcomer.

See Figure 1 for general arrangement of tank equipment. The figure depicts equipment typical of Type I Waste Tanks and is not intended to represent a specific waste tank configuration.

Type II Waste Tanks (Tanks 13 through 16)

The primary tank is 85 feet in diameter and 27 feet in height with a maximum operating capacity of 1.03 million gallons. The cylindrical walls of the primary shell are welded to the flat top and bottom plates by curved knuckle plates. A single concrete center column supports the roof. The carbon steel secondary containment is 5 feet high and 90 feet in diameter, with a capacity of approximately 25,000 gallons (to the top of the pan). There is no earth overburden on Type II tanks.

The annulus is of the same basic design as the Type I annulus.

Stainless steel waste transfer pipes are connected to the tanks. The pipes are enclosed in a carbon steel jacket pipe where they bridge across the tank annulus. Inlet pipes enter the primary tank through the top knuckle and either terminate in the vapor space or terminate in a submerged downcomer

See Figure 2 for a general arrangement of tank equipment. The figure depicts equipment typical of Type II Waste Tanks and is not intended to represent a specific waste tank configuration.

Type III Waste Tanks (Tanks 29 through 34)

The annealed carbon steel primary tank is 85 feet in diameter and 33 feet in height with a maximum operating capacity of 1.3 million gallons. A single concrete center column support is constructed as an integral part of the roof. The secondary containment is 90 feet in diameter and 33 feet in height. The primary tank rests on an insulating concrete slab that is grooved radially for airflow to cool the tank bottom. The roof support column and inner tank wall form a center annulus. There is no earth overburden on Type III tanks.

The outer annulus has a capacity of approximately 170,000 gallons. The center annulus allows for ventilation airflow to the tank bottom and then out to the outer annulus.

Stainless steel waste transfer pipes are connected to the tanks. The pipes are enclosed in a carbon steel jacket pipe where they bridge across the tank annulus. Inlet pipes enter the primary tank through the top knuckle and either terminate in the vapor space or terminate in a submerged downcomer.

See Figure 3 for a general arrangement of tank equipment. The figure depicts equipment typical of Type III/IIIA Waste Tanks and is not intended to represent a specific waste tank configuration.

Type IIIA Waste Tanks (Tanks 25 through 28 and 35 through 51)

Type IIIA tanks have the same basic design as Type III tanks except that the Type IIIA tanks are constructed of normalized steel that was stress relieved after fabrication.

See Figure 3 for general arrangement of tank equipment. The figure depicts equipment typical of Type III/IIIA Waste Tanks and is not intended to represent a specific waste tank configuration.

Type IV Waste Tanks (Tanks 17 through 24)

The 1.3 million-gallon primary tank is 85 feet in diameter with a domed roof of 45 feet in height at the center and rests on a concrete tank ring. Knuckle plates are located at the junction between the tank bottom and sidewalls. The domed roof is covered by earth that provides radiation shielding. The inner concrete wall is surrounded by a high-strength concrete wall that was pre-stressed by embedding girths of steel under tension.

The base slab has a network of channels to direct leakage to the leak detection sump, which is typically equipped with level instrumentation. For Type IV tanks in H-Area Tank Farm (HTF), a sidewall sump with a pump out port is located adjacent to the base slab. The sidewall sump is open-topped and filled with crushed stone, similar to a french drain.

Stainless steel waste transfer pipes are connected to the tanks. The pipes are enclosed in transite pressure pipe where they pass through the wall of the tank concrete vault and terminate a few feet inside the tank wall.

See Figure 4 for a general arrangement of tank equipment. The figure depicts equipment typical of Type IV Waste Tanks and is not intended to represent a specific waste tank configuration.

2.1.2 Primary Waste Tank Ventilation Systems

Waste tanks are ventilated, as required, to remove flammable vapors from the tank while preventing the release of contaminants to the environment. Ventilation also provides tank cooling, with the effect being dependent on the ventilation flow rate.

The major components comprising the primary waste tank ventilation systems are listed below and shown in Figure 5 (Note that the condenser shown in Figure 5 is not present in Type IV tank systems).

- Demister, condenser, steam reheater
- Outlet High Efficiency Particulate Air (HEPA) filter assemblies
- Exhaust fan/motor

- Manual dampers/ductwork
- Ventilation flow instrumentation

The following description is typical for most ventilation systems, but some differences exist from tank to tank.

The purge airflow is drawn into the tank by operation of the ventilation system. After sweeping the tank vapor space, the air and flammable vapors are removed through the exhaust header. In the exhaust header, the air/vapor mixture passes through a demister, condenser (not applicable to Type IV tanks), and steam reheater. From the reheater, the mixture passes through an outlet HEPA filter assembly and through an exhaust blower/fan to atmosphere. A Continuous Air Monitor or a portable air sampler monitors the exhaust stream for contamination.

The Technical Safety Requirements (TSRs Ref. 15) contain a Specific Administrative Control (SAC) that requires the monitoring of ventilation system performance when active ventilation with HEPA filtration is credited as a control for mitigating an event (see Section 3.1.1 of this report). HEPA filters are susceptible to plugging and possible breakthrough when subjected to high moisture loading, which would render the filter incapable of performing its intended function. Ventilation system performance monitoring ensures that the HEPA filter is operating properly, and capable of performing its credited function. Ventilation system performance monitoring checks the ventilation system periodically to ensure that HEPA filter plugging or breakthrough has not occurred. Monitoring is performed prior to beginning an evolution to establish baseline conditions, and periodically thereafter.

Portable ventilation systems may be used concurrently with the primary ventilation system when an increased flowrate through a waste tank is desirable (e.g., during evolutions requiring a riser to be opened to gain access into the primary tank) or as an alternate ventilation system when the primary ventilation system is not functional. A portable ventilation system typically consists of a portable blower with power module, HEPA filter, and flexible ducting. This system can be connected to a tank riser, and the blower draws the air from the tank vapor space through the HEPA filter.

Primary ventilation system operability requirements are defined in the TSRs and vary based upon the time that it takes to reach 100% of the Lower Flammability Limit (LFL) within the tank vapor space following a loss of ventilation. Waste tanks are classified as Rapid Generation Tanks (7 days $\leq$ time-to-100% LFL < 28 days); Slow Generation Tanks (28 days $\leq$ time to 100% LFL); or Very Slow Generation Tanks (do not reach 100% LFL). Rapid Generation Tanks have the most stringent ventilation operability requirements while Very Slow Generation Tanks have the least stringent. Ventilation system operability requirements also vary depending on whether certain evolutions are taking place within the tank that have the potential to release trapped gas that may reside within saltcake or sludge. Additional ventilation controls may be imposed during such evolutions beyond the normal operability requirements. These additional controls include interlocks that automatically secure the evolution (i.e., close liquid addition valves or shutdown pumps) upon the detection of a low ventilation flow condition (SC Performance Category [PC] 3 seismically qualified) or a high flammable vapor concentration (SS PC-2 seismically qualified).

In addition to the installed primary ventilation, Tank 48 is equipped with a nitrogen purge system. These two systems operate in an integrated fashion to maintain an inerted vapor space within Tank 48 during normal operations. Inerting is required by the TSRs during certain evolutions (e.g., mixing pump operation).

Except for the interlocks described above, the installed primary ventilation systems (including backup power) are not qualified for a wildland fire event or for either seismic or tornado/high wind event (PC-2 or 3). In the event that the installed system is rendered inoperable, the portable systems described above may be used. The TSRs require that qualified portable ventilation systems (including power supplies) be stored and maintained to provide ventilation capability following a catastrophic loss of the installed systems resulting from a seismic event. These portable systems and associated power supplies are capable of surviving a PC-3 seismic event in their prescribed storage location so that they will be available for post-event response. This requirement serves as a compensatory measure to mitigate the risk associated with the release of trapped gas due to the seismic event. Although the building that the required portable ventilation equipment is stored in has been PC-3 tornado/high wind qualified (except for missiles), this capability is not required by the DSA. A tornado/high wind event could render the installed ventilation systems inoperable however; ample time exists for operators to locate and deploy portable equipment since there is not a trapped gas release concern for such an event. See Section 3.1.1 for a discussion of the applicable primary waste tank DSA accident analyses and associated controls.

2.1.3 Annulus Ventilation Systems

Waste tank annulus ventilation systems are provided to maintain the primary tank wall above the nil ductility temperature limit and to prevent the accumulation of condensation within the annulus space. Annulus ventilation also provides tank cooling with the effect being dependent on the ventilation flow rate. See Figures 1, 2 and 3 for typical arrangements of Type I, II and III/IIIA waste tank annulus ventilation systems.

Type I and II waste tanks have a positive pressure annulus ventilation system. The system consists of a low efficiency filter, a pre-heater and a blower on the annulus air inlet, and a HEPA filter on the annulus outlet.

Type III and IIIA waste tanks have a negative pressure annulus ventilation system. The system consists of a low efficiency filter and pre-heater on the annulus air inlet and an exhaust blower on the annulus outlet. There is no installed HEPA filter in the exhaust of Type III and IIIA annulus systems although the design accommodates the installation of a HEPA filter, if the need arises (e.g., a primary waste tank leak into the annulus).

The installed annulus ventilation systems, including backup power (where provided), are not qualified for a wildland fire event or for either a seismic or tornado/high wind event (PC-2 or 3). No credit is taken for active annulus ventilation in the DSA (i.e., these systems serve no active SC/SS function). See Section 3.1.2 below for a discussion of the applicable waste tank annulus DSA accident analyses and associated controls.

2.2 Transfer System Facilities

Waste from other facilities is received into the tank farms and transferred between facilities via the waste transfer system. Waste is transferred between facilities through piping that typically consists of a core pipe located within secondary containment structure (e.g., jacket, encasement, transfer facility). Transfer facilities are provided as a means to interconnect the waste tanks such that waste can be transferred between waste tanks as well as from/to interfacing facilities (e.g., Canyons, Defense Waste Processing Facility [DWPF]). These transfer facilities typically consist of a reinforced concrete secondary containment structure that house transfer jumpers. With the exception of certain Diversion Boxes (DBs)

and Pump Pits (PPs)/Pump Tanks (PTs) as noted in Sections 2.2.1 and 2.2.2 below, the transfer facilities and the transfer piping have been excluded from any further DNFSB Recommendation 2004-2 evaluations (Ref. 5).

2.2.1 Diversion Boxes

DBs, depicted with PPs and PTs in Figure 6, are shielded reinforced concrete structures containing transfer line nozzles to which jumpers are connected in order to direct waste transfers to the desired location. Most DBs are located below ground and are either stainless steel lined or sealed with water proofing compounds to prevent ground contamination. DBs have concrete slab-type cell covers that must be removed for changing jumper alignment. Where specific transfers are conducted, valves and associated jumpers may be installed to minimize the need for frequent jumper changes. Jumpers are specially fabricated stainless steel pipe segments with Hanford connectors and are designed to complete specific transfer routes.

The following discussion identifies which DBs have been excluded from further DNFSB 2004-2 evaluations (Ref. 5) and provides a brief description of the principal features associated with those DBs that have not been excluded.

- F-Area DB (FDB)-1 – Excluded from further evaluation
- FDB-2 - This DB has a volume of approximately 8,300 gallons and is equipped with a sump CP, dip tubes for level indication, a high sump level alarm, and an interlock of the Inter-Area Transfer Line (F-Area Tank Farm [FTF] to HTF) transfer pump. FDB-2 is ventilated through a vent duct to the adjacent PP (F-Area PP [FPP]-1), which has a forced ventilation system. FDB-2 is the connection point from FTF to the Inter-Area Transfer Line.
- FDB-3 - Excluded from further evaluation
- FDB-4 - This DB has a volume of approximately 21,700 gallons and is equipped with an underliner and has sump and underliner CPs, dip tubes for level indication, and high sump/underliner level alarms. FDB-4 has an inlet HEPA filter and is ventilated through openings to the adjacent FPP-2 and FPP-3, which share a forced ventilation exhaust system.
- FDB-5 and FDB-6 - Excluded from further evaluation
- H-Area DB (HDB)-1 - Excluded from further evaluation
- HDB-2 - This DB has a volume of approximately 28,100 gallons and is equipped with a sump CP, dip tubes for level indication, and a high sump level alarm. HDB-2 is ventilated through a common header with H-Area PP (HPP)-1 through 4.
- HDB-3, HDB-4, and HDB-5 - Excluded from further evaluation
- HDB-6 - This DB has a volume of approximately 11,200 gallons and is equipped with a sump CP, dip tubes for level indication, a high sump level alarm, a transfer jet for jetting leakage back to a waste tank, and a forced ventilation system.
- HDB-7 - This DB has a volume of approximately 37,700 gallons and is equipped similarly to HDB-6.
- HDB-8 Complex — The HDB-8 Complex includes HDB-8, with a volume of approximately 33,000 gallons, and HPP-7 through HPP-10, with volumes of approximately 74,180 gallons each. The HDB-8 Complex facilities are interconnected via a pipe chase. The HDB-8 sump is equipped with CPs and dip tubes for level detection and alarm, and a transfer jet for jetting sump contents to H-Area Pump Tank (HPT)-10. The HDB-8 Complex contains the HTF interface with the Inter-Area Transfer Line. The HDB-8 Complex also receives DWPF recycle transfers from S-Area. Forced ventilation is provided by the HDB-8 Process Vessel Ventilation (PVV) system which also provides ventilation for the HDB-8 Complex PPs and PTs.

2.2.2 Pump Pits/Pump Tanks

PPs, depicted with PTs and DBs in Figure 6, are shielded reinforced concrete structures located below grade at the low points of transfer lines and are usually lined with stainless steel. PPs have concrete slab-type cell covers that must be removed for changing jumper alignment or gaining access to the PTs and related components. All PPs, except HPP-1, house a PT. PP sumps are equipped with CPs, dip tubes for level indication, high sump level alarms, and transfer pumps/jets. PPs provide secondary containment for PTs.

Each stainless steel 7,200-gallon (nominal) PT is equipped with dip tube level detection (redundant in most tanks) for monitoring the status of waste transfers (e.g., PT level) and an overflow line to the PP sump. Most PTs have redundant means of emptying the tank through a pump or transfer jet. The PTs are typically vented to a ventilation system having a demister, condenser, reheater, HEPA filters, and fan. The ventilation systems are typically housed in separate adjacent enclosures. The ventilation systems directly exhaust the PTs. Since the PTs are open to the PPs through passive vent devices and overflow lines, air is drawn from the PP into the PT and out the exhaust. Air is typically allowed into the PPs through a filtered inlet (except for HDB-2 Complex) attached either to a PP (e.g., HPP-5 and 6) or a co-located diversion box (e.g., FDB-2 Complex and FDB-4 Complex). From the entry point into the Complex, airflow occurs between cells via ducts, slots, or other openings.

Several PTs have agitators (pulse tube or mechanical) or recirculation pumps to prevent waste from settling. Mechanical agitation is typically provided by motor-driven blades that are attached to a stainless steel shaft. A Pulse Tube Agitator (PTA), provided in F-Area PT (FPT)-1 only, consists of three primary components: 1) charge vessel, 2) primary controller (suction and drive jets), and 3) secondary controller (computer control unit). The primary controller creates a partial vacuum in the charge vessel, drawing liquid from the PT into the charge vessel. Once the charge vessel is filled, the primary controller pressurizes the charge vessel, driving the liquid back into the tank. Mixing of the PT contents occurs as this pressure/vacuum cycle is repeated over time.

The following discussion identifies which PPs/PTs have been excluded from further DNFSB 2004-2 evaluations (Ref. 5) and provides a brief description of the features associated with those PPs/PTs that have not been excluded.

- FPP-1/FPT-1 - This PP has a volume of approximately 33,000 gallons and a sump pump for transferring sump contents into FPT-1. FPT-1 is equipped with a transfer pump, a PTA, a recirculation pump, transfer flow and pressure instrumentation, and a forced ventilation system. This PT serves as the inter-area PT for FTF.
- FPP-2/FPT-2 and FPP-3/FPT-3 - These PPs have volumes of approximately 37,400 gallons. The FPP-2 and FPP-3 sumps are equipped with CPs/alarms and transfer jets for transferring leakage back to the PTs. FPT-2 is equipped with a mechanical agitator. Each of these PTs has a transfer pump and a transfer jet. These PTs receive waste transfers from the F-Canyon Facility. These PPs/PTs share a common forced ventilation system with FDB-4.
- HPP-1 - Excluded from further evaluation
- HPP-2/HPT-2, HPP-3/HPT-3, and HPP-4/HPT-4 - These PPs have volumes of approximately 36,900 gallons. These PPs and PTs are equipped much the same as FPP-2/FPT-2 and FPP-3/FPT-3, except that HPT-4 has a mechanical agitator. These PPs/PTs share a common forced ventilation system with HDB-2.

- HPP-5/HPT-5 and HPP-6/HPT-6 - These PPs have volumes of approximately 45,100 gallons. The HPP-5 and HPP-6 sumps are equipped with CPs/alarms. These PTs receive waste transfers from the H-Area Canyon Facility. The PPs and PTs are equipped much the same as FPP-2/FPT-2 and FPP-3/FPT-3 except that HPP-5 and HPP-6 are provided with separate forced ventilation systems.
- HPP-7/HPT-7, HPP-8/HPT-8, HPP-9/HPT-9, and HPP-10/HPT-10 - These PPs have volumes of approximately 74,000 gallons. The PTs are equipped with temperature elements, mechanical agitators, transfer pumps, overflow lines to the PP sumps, and a common PVV system that is shared with HDB-8.

2.2.3 Diversion Box/ Pump Tank/Pump Pit Ventilation Systems

Diversion Box Ventilation Systems

The only DBs that have separate, dedicated forced ventilation systems are HDB-6 and HDB-7. All other DBs within the scope of this report are ventilated via their adjacent PT/PP ventilation systems. The HDB-6 and HDB-7 ventilation systems have an inlet supply header or box penetration. The exhaust header ductwork exits the DB and contains an exhaust HEPA filter and a purge fan. Local flow indication is provided to verify system operation. Figure 7 depicts the design of the HDB-6 and HDB-7 ventilation systems.

Pump Tank /Pump Pit Ventilation Systems (Excluding HDB-8 Complex)

A PT/PP ventilation system includes an inlet supply header with a HEPA filter attached to the adjacent DB or PP. From the entry point into the PT/PP complex, airflow occurs between cells via ducts, slots, or other openings. An exhaust header is attached to the PT by the use of a jumper. A purge fan pulls purge flow into the PT vapor space from the PP through a passive vent and PT overflow line. After exiting the PT, the exhaust ductwork typically contains a demister, purge condenser, reheater, a pair of exhaust HEPA filters in a parallel arrangement, and a purge fan. Local flow indication is provided to verify system operation. Figure 8 depicts a typical PP/PT ventilation system design. The HPP-2 - HPP-4 system differs from the typical arrangement in that it does not have a demister, condenser, or reheater and has a single HEPA filter.

Each PT is provided with a passive vent that is used to interconnect the PT vapor space with the PP. During normal operation, purge flow is from the PP, through the passive vent, into the PT. On a loss of ventilation flow, the passive vents effectively increase the size of the PT vapor space by providing a flow path for naturally buoyant flammable gases to flow from the PT into the PP.

HDB-8 Complex Ventilation Systems

The HDB-8 Complex consists of HDB-8 and HPP/HPT-7 through 10. Figure 9 depicts the design of the HDB-8 PVV system. The HDB-8 PVV System consists of an inlet supply line with an attached HEPA filter supplying air into HDB-8 DB. From the DB, the air is drawn into each of the four PPs and flows through the PT's ventilation inlet lines into the PTs. One of the two available exhaust fans normally is in operation and pulls the air out of each PT into a common discharge header.

The discharge header contains a condenser, a mist eliminator, a reheater, two HEPA filters in a parallel arrangement, and a flow element before discharging the exhaust to atmosphere via one of two exhaust fans and an exhaust stack. The flow element senses the airflow at the inlet of the fans. A Flow Indicating

Transmitter provides an electronic signal to provide flow indication, a low flow alarm, and a low ventilation flow interlock. Flow indication and a low flow alarm are provided in the control room.

The low flow interlock ensures that the standby fan automatically starts and dampers reposition on low ventilation flow, including low flow caused by loss of power to the operating fan. The inlet damper to each fan is interlocked to open when the associated exhaust fan is started and to close when the fan is stopped. The inlet dampers are closed by instrument air and fail open on loss of power or instrument air. A diesel generator provides back up power to the PVV exhaust fans when a loss of normal power to the HDB-8 Complex is detected.

The HDB-8 Complex is also equipped with a Building Ventilation System. The Building Ventilation System provides general ventilation for the HDB-8 Complex, and can also provide ventilation flow to specific areas during maintenance activities. The airflow from the Building Ventilation System passes through HEPA filters before discharging to a common exhaust stack with the PVV exhaust flow.

Natural Phenomena Hazard (NPH) Capability of the Diversion Box/Pump Tank/Pump Pit Ventilation Systems

With the exception of the HDB-8 PVV system, the installed DB/PT/PP ventilation systems, including backup power, are not qualified for a wildland fire event or for either a seismic or tornado/high wind event (PC-2 or 3). The HDB-8 PVV system, including the associated low flow interlock and backup diesel generator, has been qualified to withstand a PC-2 seismic event and remain functional. Therefore, no credit is taken in the DSA for the DB/PT/PP ventilation systems during or following any NPH event with the exception of the HDB-8 PVV system following a PC-2 seismic event. See Sections 3.1.3 through 3.1.5 below for a discussion of the applicable DB/PP/PT DSA accident analyses and associated controls.

3.0 DSA Development

The Tank Farm DSA (Ref. 1) was developed in compliance with the format and content specified in DOE-STD-3009-94 (Ref. 6 – note that although Change Notice 3 was issued in May 2006, the DSA was developed in accordance with Change Notice 2) and 10 CFR 830, and initially implemented in April 2003. The identification of the potential hazards and accidents associated with the operation of the facilities that comprise the Tank Farm are discussed and evaluated in Chapter 3 of the DSA. The Hazards Analyses (HA), presented in DSA Section 3.3, are used as the basis for identification of SS SSCs and Administrative Controls to protect the collocated and facility workers. The HA was also used in the selection of the Design Basis Accidents (DBAs) for further detailed quantitative analysis. The DBAs, presented in DSA Section 3.4, consist of operational-related events, natural phenomenon events, and external events. The analysis for each DBA includes scenario development, frequency determination, source term analysis, consequence analysis (radiological and chemical), comparison to Evaluation Guidelines (EGs), and a summary of controls. The DBA analyses are used as the basis for identification of SC and SS SSCs and Administrative Controls to protect the offsite public.

In accordance with the DNFSB 2004-2 evaluation guidance document (Ref. 4), an evaluation of the applicable bounding DBAs was performed for the primary waste tanks, waste tank annuli, and transfer facilities. These evaluations are documented in Attachments 1 through 3 using the “Table 4.3” format and content required by Reference 4. For the purposes of this report the “confinement” information on the tables reflects any case in which a confinement function is credited for a DBA regardless of whether

that confinement function is passive (e.g., gross airborne confinement capability of a structure is credited) or active (e.g., active ventilation system with HEPA filtration is credited) in nature.

The following sections summarize the accident analyses performed for the waste tanks (primary and annuli) and transfer facilities as well as the control selection process used in developing the attendant controls. Additionally, each accident analysis summary includes a discussion of the role of an active confinement ventilation system in preventing or mitigating that accident.

3.1 Summary of Accident Analyses

The DSA (Ref. 1) supports the conclusion that the Tank Farms can be operated without undue risk to the public, to SRS workers, or the environment. The principal hazards associated with waste tank and transfer facility operation include liquid radioactive waste release events (spills and leaks from primary containment structures) and airborne radioactive waste release events (explosions, aerosolization, and overheat). The liquid waste release events involve a loss of containment that could be caused by a process event (e.g., leak, spill, or transfer error), an external event (e.g., vehicle impact), or an NPH event. The most significant of the airborne release events involve an explosion in a waste tank or PT. The radioactive aqueous alkaline wastes stored at the Tank Farms can produce hydrogen (due to radiolysis of water), which poses an explosion concern.

The DSA accident analyses were performed in full compliance with applicable DOE-STD-3009-94 and SRS requirements. This includes the use of:

- 95% meteorology for offsite consequence calculations
- 50% meteorology for onsite consequence calculations
- 100 cm surface roughness factor (consistent with SRS topography and protected by control of forest clear cutting) in offsite and onsite consequence calculations

Control selection for each accident was performed in accordance with the hierarchy guidance provided in DOE-STD-3009-94 (Ref. 6) and in the Washington Savannah River Company (WSRC) Functional Classification procedure (Ref. 7). This hierarchy encourages the prevention of an accident vice mitigation. In keeping with this preference, a preventive control was selected as the primary control whenever possible where the Offsite or Onsite EGs were challenged. In no case is active confinement ventilation (with HEPA filtration) selected as the primary control since such a system would mitigate the consequences of an accident instead of preventing it from occurring.

3.1.1 Primary Waste Tanks

The DBAs analyzed for the primary waste tanks can be grouped into three principal event categories: (1) Aerosolization Events; (2) Explosion Events; and (3) Overheat Events. The following summarizes each of these DBA groupings and associated controls. Refer to Attachment 1 for specific detailed information concerning consequences and safety functions/controls, including associated functional classifications.

<u>Aerosolization Events</u>

Aerosolization resulting from transfer jet failures, mixing device rooster tailing, Advanced Design Mixing Pump column air leaks, transfer diaphragm pump failures, or disturbance of dry sludge can be initiated during normal operations or as a result of NPH events. In all cases where the unmitigated consequences

challenge the Offsite or Onsite EGs, the primary control selected is a preventor (i.e., mitigated consequences are equal to zero rem). To provide significant defense in depth, the installed primary waste tank ventilation system (including HEPA filtration) is credited as a mitigative second level of control for certain non-NPH-initiated aerosolization events. As discussed in Section 2.1.2, the installed primary tank ventilation systems are not qualified to remain functional during or following an NPH event. Therefore, these systems can not be credited when an NPH event is identified as the initiator for a specific aerosolization progression.

Explosion Events

Hydrogen is released in the primary waste tank vapor space during normal operations as a result of radiolytic hydrogen generation and from dissolved hydrogen released from incoming jetted transfers. Hydrogen that is radiolytically generated can become trapped within the sludge and saltcake waste forms within the waste tanks. Activities that disturb sludge/saltcake (such as sludge agitation, bulk salt dissolution, or saltcake interstitial liquid removal) can result in significant additional amounts of hydrogen being released into the vapor space. Flammable vapor accumulation (such as during a loss of ventilation) can result in exceeding 100% of the LFL within the tank vapor. In addition to hydrogen, other flammable organic gases may be present in Tank 48 (benzene from degradation of Tetraphenylborate, a legacy issue resulting from the use of this tank as the reaction tank for the In-Tank Precipitation Process) and in Tank 50 (current concern - benzene from In-Tank Precipitation Process; future concern – Isopar® L from operation of the Modular Caustic Side Solvent Extraction Unit).

During normal operations, the primary waste tank ventilation system is credited in all waste tanks to limit the accumulation of flammable vapors such that an explosive mixture will not form. This safety function does not include any credit for confinement (i.e., no HEPA filtration). Additionally, the low ventilation flow/high flammable vapor concentration interlocks discussed in Section 2.1.2 are required when certain sludge/saltcake disturbing (i.e., trapped gas release) activities are conducted. For Tank 48, the nitrogen purge system is also credited to maintain an inert vapor space during certain evolutions where benzene release may be a concern. For Tank 50, periodic waste temperature monitoring is also credited to protect the maximum Isopar® L vapor space concentration assumed in the analysis.

As discussed in Section 2.1.2, the installed primary waste tank ventilation systems are not qualified to remain functional during or following an NPH event. Therefore, these systems can not be credited when an NPH event is identified as the initiator for a specific explosion progression. To prevent an explosion resulting from a loss of ventilation, the primary control credited in a tornado/high wind or wildland fire event is the Flammability Control Program. This SAC requires that each waste tank be maintained such that a minimum of seven days to LFL is available following a loss of ventilation. This time frame is judged to provide adequate time to restore the installed ventilation systems or to install and operate portable ventilation equipment.

The DSA recognizes that trapped gas can be released during a seismic event at a significant rate such that it may not be possible to prevent an explosion. Therefore, DSA Section 3.4.2.18 reports mitigated consequences for a seismically-initiated waste tank explosion that may exceed both the Offsite and Onsite EGs. The primary waste tanks (excluding Type IV Waste Tanks) have been structurally qualified for a seismic event such that they will remain intact during and following a seismic event to provide a passive gross confinement function to mitigate the consequences of a waste tank explosion. Type IV Waste Tanks are not seismically qualified to survive a PC-3 seismic event; however a gross failure of the waste tank will preclude the accumulation of flammable vapor within the tank vapor space. Thus, a seismically initiated explosion within a Type IV waste tank is not a concern if the tank structure fails. If the tank does not fail, it is assumed to remain available to provide a gross confinement function should a seismically initiated explosion occur. Additionally the Event Response Program (SAC) is credited with terminating

activities that have the potential to release flammable vapors (i.e., secure waste transfers and sludge/saltcake disturbing activities) as well as installing and operating portable ventilation systems in response to a seismic event.

Overheat Events

Certain initiating events are postulated that could cause boiling within the waste tanks resulting in an airborne release. Three credible mechanisms were identified that can lead to an overheat event including heat from: radiolytic decay; evaporator drop waste transfers; and steam transfer jet misoperation/failure. The resulting consequences do not challenge either the Offsite or Onsite EGs therefore; no SC/SS controls are required. To eliminate the transfer jet progression from contributing to the total consequences for a seismic event, the pressure boundaries of the steam supply lines and the transfer jets have been PC-3 seismically qualified and are credited as SC design features. The consequences from a tank overheat event associated with radiolytic decay heat and evaporator drop waste transfers have been included in the total reported consequences for tornado/high winds, seismic, and wildland fire events. An active confinement ventilation system is not credited for any waste tank overheat scenario.

3.1.2 Waste Tank Annuli

The DBAs analyzed for the waste tank annuli can be grouped into three principal event categories: (1) Leak/Spill Events, (2) Aerosolization Events, and (3) Explosion Events. The following summarizes each of these DBA groupings and associated controls. Refer to Attachment 2 for specific detailed information concerning consequences and safety functions/controls, including associated functional classifications.

Leak/Spill Events

Leaks or spills of waste into a waste tank annulus can occur from one of two sources: a leak through the primary waste tank wall or from the failure of a waste transfer line that traverses the annulus (i.e., transfer line passes through the annulus into/out of the primary waste tank). The consequences resulting from a waste tank wall leak do not challenge either the Offsite or Onsite EGs therefore; no SC/SS controls are required. The consequences resulting from a failure of a waste transfer line challenges the Onsite EGs, but not the Offsite EGs. The structural integrity of the waste transfer line core pipe (PC-3 seismically qualified) is credited as the primary control and is preventive in nature. To provide significant defense in depth, an additional mitigative control was selected in some cases depending upon the resulting consequences (see Attachment 2 for details). This additional control varies by tank type and whether the progression is seismically initiated. In the non-seismic case:

- The Type I and II waste tank annulus structure is credited to provide a passive confinement function. The annulus ventilation ductwork up to, and including, the HEPA filter, is also credited to provide a passive confinement function should the installed non-credited annulus ventilation system be operating at the time of a leak. The annulus ventilation system for these tanks is a positive pressure design thus, to avoid the spread of contamination, active ventilation was not credited.
- The Type III/IIIA waste tank annulus conductivity probes and associated control room alarms, as well as equipment required to stop a waste transfer, are credited to detect and stop a leak into the annulus from a waste transfer line. The annulus ventilation system was not credited since the design of these systems does not include an installed HEPA filter.

The passive gross airborne confinement capability of the primary waste tank is credited as an additional control to reduce the consequences of a seismically-initiated transfer line failure. Regardless of the

initiating event, waste accumulating in the annulus structure would most likely submerge the installed annulus ventilation supply ductwork within the annulus space (ductwork is physically located on floor of annulus space) thus rendering the installed system inoperable.

Aerosolization Events

Aerosolization resulting from transfer jet failures can be initiated during normal operations or as a result of NPH events. The primary control selected for these events is a preventor (i.e., mitigated consequences are equal to zero rem). To provide significant defense in depth, the Transfers from Waste Tank Annuli Program is credited as a significant defense in depth control for non-NPH events. This SAC ensures that a negative pressure, filtered ventilation system is installed and operating prior to initiating a jetted transfer from a waste tank annulus. The installed annulus ventilation systems do not meet these criteria (negative pressure and filtered). As discussed in Section 2.1.3, the installed annulus ventilation systems, including backup power, can not be qualified to remain functional during or following an NPH event. Therefore, these systems can not be credited when an NPH event is identified as the initiator for a specific aerosolization progression. Regardless of the initiating event, waste accumulating in the annulus structure (that would require the annulus transfer jet to be used) would most likely submerge the installed annulus ventilation supply ductwork within the annulus space thus rendering the installed system inoperable.

Explosion Events

The leak or spill of radioactive waste from either a through-wall tank leak or a transfer line failure can result in hydrogen being released into the annulus vapor space (from radiolytic generation and as a result of dissolved hydrogen released from jetted transfers). The bulk annulus vapor space will not reach 100% of the LFL within the ten day accident duration assumed in the analyses and therefore, no explosion will occur. However, with the exception of Tank 40, the annulus ventilation ductwork within the Type III/IIIA Waste Tanks annuli will exceed the LFL, but does not reach the Lower Explosive Limit (LEL) within this same timeframe in the event of a waste transfer line leak. The annulus ductwork within Tank 40 will exceed the LEL in the event of a waste transfer line leak during an Extended Sludge Processing (ESP) Sludge Slurry transfer. The annulus explosion consequences reported are therefore, associated with a ductwork deflagration (detonation Tank 40 only) in these tank annuli. The flammable vapor removal function of the installed Type III/IIIA annulus ventilation systems would be rendered ineffective due to the submergence of the annulus ductwork by the waste that is leaked into the annulus. Additionally the annulus ventilation system ductwork would not be expected to remain intact following a ductwork explosion.

For a non-ESP Sludge Slurry transfer, the unmitigated consequences of a transfer line leak into the annulus leading to an explosion do not challenge either the Onsite or Offsite EGs so that no SC/SS controls are required. However, this accident is prevented to reduce the overall consequences associated with a seismic event. For the seismic case, the first level of control (PC-3 seismically qualified) is the primary waste tank (tank wall leak case) and the transfer core pipe (core pipe leak case).

A Tank 40 ductwork explosion associated with an ESP Sludge Slurry leak is assumed to result in a gross failure of the primary waste tank. The consequences of the Tank 40 ductwork detonation and subsequent tank failure were judged to exceed both the Offsite and Onsite EGs (seismic and non-seismic cases). For this event, the first level of control is the Tank 40 annulus transfer core pipe (PC-3 seismically qualified) to ensure the structural integrity of this piping such that no leak will occur.

3.1.3 Diversion Boxes

The DBAs analyzed for the DBs can be grouped into four principal event categories: (1) Fire Events, (2) Explosion Events, (3) Leak/Spill Events, and (4) Aerosolization Events. The following summarizes each of these DBA groupings and associated controls. Refer to Attachment 3 for specific detailed information concerning consequences and safety functions/controls, including associated functional classifications.

Fire Events

The DBA analyses include the evaluation of a scenario in which combustible material is present in a DB coincident and an ignition source as well as radioactive waste from a leak. The waste is subsequently vaporized by the energy from the burning material (note that the waste itself is non-combustible). The unmitigated consequences of this scenario do not challenge either the Onsite or Offsite EGs so that no SC/SS controls are required with the exception of crediting the combustible control element of the SRS Fire Protection Program to protect the initial combustible loading assumed in the analyses.

Explosion Events

Two explosion scenarios were addressed in the DBA analyses: an explosion inside of a core pipe (jumper) within a DB and an explosion resulting from a leak of radioactive waste from a jumper, connector, or valve and associated radiolytic hydrogen generation and accumulation within the DB. In the later case, the DB vapor space explosion is also assumed to result in a failure of the installed HEPA filters due to the explosion overpressure as well as a subsequent 15,000 gallon spill of waste into the DB. The total DB vapor space explosion consequences include those directly from the explosion as well as those from the resulting spill and HEPA filter failures. For the core pipe explosion scenario the Transfer Control Program (SAC) is credited as the primary control to ensure that the core pipe is flushed following sludge slurry transfers to reduce the Inhalation Dose Potential (IDP) of the residual waste within the core pipe, thus mitigating the consequences of an explosion.

The analyses for the explosion scenario resulting from a leak demonstrate that the vapor space in HDB-7 (during non-ESP Sludge Slurry Transfers) and in HDB-8 do not reach 100% of the LFL within the assumed ten day accident duration therefore, no explosion will occur and no SC/SS controls are required. For all other DBs and HDB-7 (during ESP Sludge Slurry transfers) the integrity of the core pipe (PC-3 seismically qualified including jumpers, connectors, and valves) is credited as the primary control to prevent leaks from occurring. To provide significant defense in depth, an additional control was selected in some cases depending on the consequences (see Attachment 3 for details). In these cases, the installed active ventilation system is credited with limiting the accumulation of flammable vapors within the DB thus, preventing an explosive mixture from forming (non-seismic scenario). This safety function does not include any credit for confinement (i.e., no HEPA filtration). The passive gross airborne confinement capability of the DB structure is credited as a mitigative second level control to reduce the consequences of a seismically-initiated DB explosion.

Leak/Spill Events

This event involves a spill of 15,000 gallons of waste into a DB from a jumper, connector, or valve failure. FDB-2 and HDB-6 have an internal volume less than 15,000 gallons so that the event results in a ground level release. The remaining DBs have an internal volume greater than 15,000 gallons and thus, contain the waste such that no ground level release occurs. In each case the primary control is the core

pipe integrity (PC-3 seismically qualified) to prevent a leak of waste into the facility. No credit is taken in the analysis for an active confinement function.

Aerosolization Events

Aerosolization resulting from transfer jet failures can be initiated during normal operations or as a result of NPH events. The primary control selected for these events is the integrity of the steam/air supply piping and the transfer jet (PC-3 seismically qualified) to prevent an aerosolization event. To provide significant defense in depth, the installed DB ventilation system (including HEPA filtration) is credited as a mitigative second level of control (non-seismic scenario). As discussed in Section 2.2.3, the installed DB ventilation systems, including backup power, are not qualified to remain functional during or following an NPH event. Therefore, these systems can not be credited when an NPH event is identified as the initiator for a DB aerosolization scenario.

3.1.4 Pump Tanks

The DBAs analyzed for the PTs can be grouped into three principal event categories: (1) Explosion Events, (2) Aerosolization Events, and (3) Overheat Events. The following summarizes each of these DBA groupings and associated controls. Refer to Attachment 3 for specific detailed information concerning consequences and safety functions/controls, including associated functional classifications.

Explosion Events

The PTs are normally ventilated to prevent the accumulation of flammable vapors within the PT vapor space. Should ventilation be lost for any reason, an explosive mixture of hydrogen can form within the PT from radiolysis as well as from dissolved hydrogen released during incoming jetted transfers. This scenario involves an explosion within a PT due to the accumulation of flammable vapors resulting in a subsequent 15,000 gallon spill of waste into the affected PP. The total PT vapor space explosion consequences include those directly from the explosion as well as those from the resulting spill. The primary control selected for normal operations is the active installed ventilation system to provide the minimum required ventilation flow through the PT to prevent the accumulation of a flammable gas mixture. This safety function does not include any credit for confinement (i.e., no HEPA filtration). The following controls were also credited as part of the first level of control: Passive vents (non-HDB-8 PTs) to extend the time to LFL upon loss of ventilation; HDB-8 diesel generator; equipment to stop transfers on loss of ventilation to minimize dissolved hydrogen release associated with incoming jetted transfers; and the Pump Tank Backup Ventilation Systems Program (SAC). This program is credited for the non-HDB-8 PTs to ensure that backup portable ventilation (with power supply) is installed and functional for PTs receiving jetted transfers.

For a tornado/high winds, wildland fire, or loss of power initiated PT explosion, a SAC (Severe Weather Response Program or Event Response Program) is credited as the primary preventive control to terminate jetted transfers into PTs. For a loss of power initiated PT explosion, the HDB-8 PVV system and associated diesel generator as well as the non-HDB-8 passive vents are credited as additional preventive controls.

The DSA recognizes that sufficient time may not be available to respond to seismic event during a jetted transfer to prevent a PT explosion. Additionally, the DSA recognizes that trapped gas (from sludge heels) can be released into a PT during a seismic event at the same that the associated active ventilation system is rendered inoperable due a lack of seismic capability. Therefore, the DSA Section 3.4.2.18 reports

mitigated consequences for six coincident seismically-initiated PT explosions that may exceed the Onsite EGs. The HDB-8 PVV system and associated diesel generator as well as the non-HDB-8 passive vents are credited as the primary controls (all PC-2 seismically qualified) to prevent a seismically-initiated PT explosion.

Aerosolization Events

Aerosolization resulting from transfer jet failures or from failures of the FPT-1 PTA can be initiated during normal operations (PT aerosolization resulting from an NPH event is not credible given the unique design configuration of the PT transfer jets and the PTA). The primary controls selected for these events prevent aerosolization. To provide significant defense in depth, the installed PP ventilation system (including HEPA filtration) is credited as a mitigative second level of control.

Overheat Events

Certain initiating events are postulated that could cause boiling within the PTs resulting in an airborne release. The only credible mechanism that was identified that can lead to a PT overheat event is from steam transfer jet misoperation (discharge path is closed via valve closure or salt plug). The resulting consequences do not challenge either the Offsite or Onsite EGs therefore; no SC/SS controls are required. The design of the PT transfer jets is such that there are no credible means by which an NPH event can result in a PT overheat scenario.

3.1.5 Pump Pits

The DBAs analyzed for the PPs can be grouped into four principal event categories: (1) Fire Events, (2) Explosion Events, (3) Aerosolization Events, and (4) Leak/Spill Events. The following summarizes each of these DBA groupings and associated controls. Refer to Attachment 3 for specific detailed information concerning consequences and safety functions/controls, including associated functional classifications.

Fire Events

The DBA analyses include the evaluation of a scenario in which combustible material is present in a PP coincident with an ignition source and radioactive waste from a leak. The above DB Fire Events discussion is equally applicable to the PPs.

Explosion Events

Two explosion scenarios were addressed in the DBA analyses: an explosion inside of a core pipe (jumper) within a PP and an explosion resulting from a leak of radioactive waste from a PT, jumper, connector, or valve and associated hydrogen generation/release and accumulation. For the core pipe explosion scenario, the primary control described in the DB Explosion Events discussion is equally applicable to the PPs.

The analyses for the for the explosion scenario resulting from a leak demonstrate that the vapor space in PPs will not reach 100% of the LFL within the assumed ten day accident duration, therefore no explosion will occur and no SC/SS controls are required.

Aerosolization Events

Aerosolization resulting from transfer jet failures can be initiated during normal operations or as a result of NPH events. The controls described above in the DB Aerosolization Events discussion are equally applicable to the PPs (substitute PP ventilation for DB ventilation in the second level of control).

Leak/Spill Events

This event involves a spill of 15,000 gallons of waste into a PP from a PT overflow or from a jumper, connector, or valve failure. All PPs have an internal volume greater than 15,000 gallons and thus, contain the waste such that no ground level release occurs. For the jumper/connector/valve leak scenario during normal operations the primary control is the core pipe integrity (PC-3 seismically qualified) to prevent a leak of waste into the facility. For the PT overflow scenario during normal operations, the primary control includes the structural integrity of the PT, the PP sump CPs and associated control room alarm, as well as equipment to stop the incoming transfers. To prevent or mitigate Offsite consequence concerns, SC controls are credited for a tornado/high winds, seismic, or wildland fire initiated jumper/connector/valve leak or PT overflow. In no case does the analysis credit an active confinement function.

3.2 Control Selection

In establishing the required controls for each identified hazard, the control selection hierarchy guidance provided in DOE-STD-3009-94 (Ref. 6) and in the WSRC Functional Classification procedure (Ref. 7) was employed. This hierarchy recommends the following selection preferences:

- Passive over active
- Preventive over mitigative
- Engineered over administrative controls

Additionally, it is preferred that the control (i.e., barrier) be as close to the hazard as possible.

A summary of control selection and evaluation process used in the development of the Tank Farm DSA is depicted in Figure 10.

In the early 1950s, 12 carbon steel-walled, concrete-encased, underground tanks were constructed in F- and H-Areas for the storage of aqueous, radioactive wastes produced in the Separations processing of fuel and target material from the SRS nuclear production reactors. Over the next 30 years, 39 additional tanks of similar but improved design were constructed to store wastes from SRS separations and research facilities. During these time frames, the inter-connecting waste transfer piping and Transfer Facilities were also constructed. As such, many of the systems were not built to current design standards and in some instances there are not sufficient engineered controls available to prevent or mitigate all the DBAs analyzed in the DSA. Therefore, the control selection process resulted in identifying SC and SS functions for existing SSCs as well as identifying SC and SS functions for new SSCs (future designs). A formal backfit analysis process was used to assess the suitability of the existing SSCs to provide the SC/SS functions required by the DBA analyses. In some cases, the results of this process identified vulnerabilities (i.e., gaps) where the existing SSCs did not fully meet all applicable SC/SS design requirements. These vulnerabilities were subjected to a formal disposition process resulting in one of three disposition paths:

- Eliminate vulnerability via physical modification
- Mitigate vulnerability via compensatory measure
- Accept vulnerability

The results of the backfit and vulnerability analyses were fed back into the control selection process and adjustments were made as necessary. For example, a structural evaluation of the installed primary waste tank ventilation systems identified a vulnerability that, short of total replacement, these systems were incapable of being seismically qualified. Given the significant cost impact with achieving full qualification, this vulnerability was mitigated via compensatory measures. This decision was fed back into the control selection process so that the SC/SS control set specified for a seismic event reflected this vulnerability (i.e., no credit was taken for the installed primary waste tank ventilation systems).

3.3 Functional Classification Assessment

3.3.1 Existing Classification

As discussed in Section 3.1, the ventilation systems addressed in this report are functionally classified as follows:

- Primary Waste Tank Ventilation – Type I, II, III/IIIA Waste Tanks (excluding Tanks 48 and 50)
    - SC - control of flammable vapor accumulation during normal operations (primary control)
    - SS – active confinement during normal operations (defense in depth control)
- Primary Waste Tank Ventilation – Type IV Waste Tanks and Tanks 48 and 50
    - SS - control of flammable vapor accumulation during normal operations (primary control)
    - SS – active confinement during normal operations (defense in depth control)
- Waste Tank Annulus Ventilation – Type I and II Waste Tanks (up to and including HEPA filter)
    - SS – passive confinement during normal operations, only if the non-credited installed system is operating (defense in depth control)
- Waste Tank Annulus Ventilation (All portions of Type I, II, and III/IIIA except as discussed above)
    - No identified SC/SS function
- Transfer Facility Ventilation Systems
    - SS - control of flammable vapor accumulation within non-HDB-8 PTs during normal operations (primary control)
    - SS – control of flammable vapor accumulation within HDB-8 PTs during normal operations and during/following seismic event (primary control)
    - SS – control of flammable vapor accumulation within selected DBs (defense in depth control)
    - SS – active confinement during normal operations (defense in depth control)

3.3.2 Evaluation

The functional classification of the installed Waste Tank and Transfer Facility ventilation systems was performed in accordance with the requirements of DOE-STD-3009-94 (Ref. 6) as implemented by the WSRC Functional Classification procedure (Ref. 7). Together, these documents establish Offsite and Onsite EGs for the purposes of assigning functional classifications. The accident analysis consequence results were appropriately evaluated to determine whether the results challenged the EGs – the EGs were not used as strict acceptance criteria (i.e., EGs were not used as “speed limits”). The assigned

classifications accurately reflect the results of the accident analyses and the safety functions credited in the DSA for these ventilation systems.

3.3.3 Summary

The functional classifications of the installed Waste Tank and Transfer Facility ventilation systems are appropriate.

4.0 Backfit Analyses and Vulnerability Disposition

4.1 Backfit Analysis Process

WSRC Manual E7 Procedure 3.41 (Ref. 8) defines the responsibilities, requirements, specific guidelines, and methodology for conducting a backfit analysis at SRS. The backfit analysis process is used to evaluate the proposed incorporation of new or revised design requirements for an existing SSC and to determine the design modifications and/or compensating measures needed to comply with the new/revised requirements being imposed. It is used when the functional classification of an SSC is upgraded to SC or SS or for any other situation or event that imposes new design requirements on an SSC. The backfit analysis process is intended for existing facilities and does not apply to the design of new facilities, which must be designed and constructed in accordance with current codes and standards.

The backfit analysis process typically includes the following steps:

- Initiation
  - Identification of new/revised SC/SS functions for existing SSCs
  - Identification of conditions (e.g., seismic, high winds, loss of power) under which each SC/SS function is required to be remain available
- Design Adequacy Assessment
  - Review of existing SSC design bases
  - Identification of applicable SC/SS design criteria
  - Comparison and assessment of design bases against applicable SC/SS design criteria
- Backfit Analysis
  - Develop justifications of adequacy for design criteria that are not met
    - Cost Benefit analyses may be invoked
  - Establish set of SSC-specific design criteria that must be maintained
- Documentation of design adequacy assessment and backfit analysis within formal backfit analysis package

To the extent possible, acceptable combinations of SSCs, modifications to equipment, compensatory measures or replacement of existing equipment with new SC or SS equipment are considered as part of the backfit analysis process. However, the E7 3.41 procedure recognizes that the backfit analysis process "may result in SSCs being designated SC or SS without necessarily meeting all of the applicable design criteria; however, this philosophy is permitted by WSRC procedures, standards, and guidance."

In support of the Tank Farm DSA development effort, backfit analysis packages were developed, reviewed, and approved. Supporting analyses were performed as necessary to confirm SSC compliance

with applicable SC/SS design criteria (structural qualification, uncertainty calculations, etc.). Instances of non-compliance with the applicable SC/SS design requirements were subjected to a formal vulnerability assessment and disposition process as described in Section 4.3 of this report. This additional process provided for a rigorous vulnerability evaluation with input from all principal stakeholders. The resulting vulnerability disposition decisions were factored into the backfit analysis reports. The information contained in these reports was subsequently incorporated into Chapter 4 of the DSA. The design requirements used in the backfit analyses are provided in DSA Tables 4.2-1 and 4.2-2 (included herein as Attachments 4 and 5). The results of the backfit analyses are summarized in Section 4.3.X.3 for SC SSCs and Section 4.4.X.3 for SS SSCs (where "X" denotes a unique subsection associated for a specific SSC) including a discussion of any identified instances of non-compliance and associated justifications (including a discussion of compensatory measures, if applicable). DSA Tables 4.3-2 (SC SSCs) and 4.4-2 (SS SSCs) provide a summary of compliance for each SSC versus the applicable SC or SS design requirements. For the purposes of this report, the term "vulnerability" is synonymous with the term "gap" used in the DNFSB 2004-2 evaluation guidance document (Ref. 4).

In general, the backfit analysis process was not used for passive structural SC/SS items. These items were qualified for their intended safety functions by structural qualification analyses. These items are functionally classified as SC/SS and are included in the Structural Integrity Program to ensure their continued functionality.

4.2 Comparison of DNFSB 2004-2 Table 5.1 Performance Criteria to Tank Farm Backfit Analysis Design Requirements and TSRs

The DNFSB 2004-2 evaluation guidance document (Ref. 4) specifies a set of performance criteria to be used in evaluating confinement ventilation systems for the purposes of identifying performance gaps during the completion of DNFSB 2004-2 deliverable Table 5.1. These criteria include design criteria as well as operational performance criteria. The design requirements used in the Tank Farm backfit analysis process discussed in Section 4.1 are generally consistent with the Reference 4 design criteria. The Reference 4 operational performance criteria are typically defined in the Tank Farm TSRs, although some of these do affect the system design (e.g., necessary instrumentation provided to perform designated surveillance tests). Attachment 6 provides a comparison of the Reference 4 performance criteria to the Tank Farm Backfit Analysis Design Requirements and TSRs.

The only significant difference between the criteria provided in Reference 4 and that used in the Tank Farm backfit analyses or required by the TSRs is the criterion for post-accident indication of filter break-through. As discussed in Attachment 6, installed filter break-through monitoring capability is provided on all the ventilation systems addressed by this report. However, this instrumentation is provided for routine release monitoring only in compliance with applicable environmental permit requirements/commitments and serves no SC/SS function. The imposition of this post-accident monitoring criterion on the Tank Farm ventilation systems under the scope of this report is not practical given the very high likelihood for multiple radiological release paths to exist following a DBA in a waste tank (primary or annulus) or a Transfer Facility.

The waste tanks and Transfer Facilities are outdoor facilities and as such are not enclosed by containment structures (e.g., canyon building). There are multiple access openings directly into the waste tanks (primary and annulus) that are sealed off by riser plugs that are held in place by the dead weight of the plug. The DB/PP cell cover design uses a multi-segmented slab design that is likewise held in place by the dead weight of the covers. The tank riser plug joints and cell cover joints are not designed to be leak tight. Therefore, multiple release points would likely exist following an explosion, aerosolization,

leak/spill, fire, or overheat event. This would be particularly true for any NPH or loss of power initiated event since the installed systems are not qualified to operate during or following such events (with the sole exception of HDB-8 during a seismic or loss of power initiated event). The most significant mitigated releases are those associated with an explosion event that would likely not only render the ventilation systems inoperable, but would also lift riser plugs or cell covers. This situation is further exacerbated due to the potential for multiple accidents to occur as a result of a common mode initiator, in particular due to a seismic event (i.e., potential exists for multiple release mechanisms within the Tank Farm as well as multiple release points within a given waste tank or transfer facility). Because of the high potential for multiple post-accident release paths, the prudent post-accident monitoring approach is to rely on the use of portable survey equipment as a key element of the SRS Emergency Response Program (Ref. 15, TSR Administrative Control 5.8.2.2).

4.3 Vulnerability Assessment, Disposition, and Documentation

This section discusses the assessment, disposition, and documentation of the vulnerabilities identified in the backfit analysis process discussed in Section 4.1 above. The vulnerability assessment, disposition, and documentation effort was performed as part of the Safety Input Review Committee (SIRC) process governed by WSRC Manual S4 Procedure ENG.29 (Ref. 9). The SIRC process provided a rigorous review and approval process for various facets of the DSA development effort, including the review and approval of inputs and assumptions, analytical methodology, control selection, and vulnerability disposition.

4.3.1 Vulnerability Assessment

Vulnerabilities were identified for the installed Primary Waste Tank, Waste Tank Annulus, and Transfer Facility ventilation systems through the backfit analysis process as discussed in Section 4.1. Evaluation datasheets were developed for the identified vulnerabilities by the engineers responsible for each accident. Each datasheet included:

- Identification of the specific vulnerability (i.e., precise gap definition)
- Modification scope and rough order of magnitude estimate to eliminate vulnerability
- Compensatory measure that could mitigate the vulnerability along with a residual risk discussion, if possible
- Justification for accepting the vulnerability along with a residual risk discussion, if possible

The modification cost estimate provided a cost/benefit perspective during the disposition process. The residual risk discussions in the last two bulleted items above were qualitative or quantitative in nature depending on the particular vulnerability and were intended to provide an overall perspective of the risk associated with either disposition option so that an informed vulnerability disposition decision could be made. For example, as discussed in Sections 3.1.1 and 3.1.4 above, the mitigated consequences for a seismic event include the consequences for at least one waste tank explosion and six PT explosions. To assess the risk inherent in accepting this situation, a “realistic” evaluation of these two explosion events was performed to contrast “realistic” consequences against the conservative bounding DBA consequences reported in the DSA (e.g., waste tank explosion analysis assumes worst case bounding sludge slurry as the Material at Risk [MAR] even though the most likely MAR would be static supernate with a significantly lower IDP; PT explosion analysis assumes that trapped hydrogen is released from sludge heels resident in the PT even though this heel would be agitated either directly via a mixing device or the mixing forces associated with incoming/outgoing transfers through the PT).

4.3.2 Vulnerability Disposition

The vulnerability evaluation datasheets were subsequently subjected to the SIRC review and approval process discussed in Section 4.3 above. Voting members of the Senior SIRC include the Liquid Waste Operations Program Manager (Chairperson), Tank Farm Facility Operations Safety Committee chairpersons or the HTF/FTF Facility Managers, the Tank Farm Chief Engineer, a member of the Liquid Waste Operations Safety Basis Engineering group, and a senior manager from Washington Safety Management Solutions. Approval requires a unanimous decision. The DOE Waste Disposition Engineering Manager also participates in the Senior SIRC meetings. Although the DOE member is not a voting member, this representative does lend a DOE management perspective to the process to foster communication and understanding between the DOE and contractor personnel.

4.3.3 Vulnerability Documentation

SIRC vulnerability disposition approval was noted directly on each evaluation datasheet. This information was then reflected into the backfit analysis and control selection processes and reflected in Chapter 4 of the DSA as discussed in Section 4.1 above. Additionally, Section 3.3.3.1 was added to the DSA to specifically acknowledge the existence of vulnerabilities with some of the controls credited in the DSA. A tabulation of proposed facility upgrades to eliminate/mitigate these vulnerabilities was included in DSA Table 3.3-16. DSA Section 3.3.3.1 states:

> "The CSTF [Tank Farm] was constructed between the early 1950s and mid 1990s. As such, many of the systems were not built to the latest design standards and in some instances there are not sufficient controls to prevent or mitigate all the accidents discussed in Section 3.4. This section discusses the modifications recommended for DOE approval to improve/achieve compliance with the design standards and ensure sufficient controls for each of the accidents. This DSA, including mitigated consequences, does not credit or account for any of these improvements. The consequences quoted in this chapter credit the currently installed equipment for preventing or mitigating the given accident scenarios (i.e., no credit is given to the proposed improvements). This Section (3.3.3.3.1) is not required to be evaluated against while performing USQ reviews, except for the "Currently Credited Control(s)" as presented in Table 3.3-16. These improvements are being pursued in accordance with DOE Order 413.3. When these modifications are installed, the DSA will be revised to account for the new equipment."

Table 3.3-16 identifies the following accidents as having the highest residual risk for the Tank Farm and thus, includes proposed upgrades to prevent/mitigate these accidents:

- Transfer Facility Explosions
- Transfer Errors (leaks/spills/overflows – including PT overflow)
- Waste Tank Siphon/Pump Out
- Transfer Line Jacket/Encasement Explosions
- Waste Tank Explosions
- Seismic (specifically addresses lack of Control Room seismic qualification)

Therefore, this listing identifies those modifications that can be pursued by the facility as funding permits to reduce the residual risk associated with Tank Farm operations. These modifications are prioritized in the Table 3.3-16 Implementation Plan (Ref. 10) based upon an assessment of residual risk and future waste processing plans. This plan identifies the Waste Tank Explosion modifications as the high priority upgrade followed by the PT explosion modifications as these events have the highest mitigated consequences reported in the DSA. The waste tank and PT upgrades were proposed to substantially

reduce the risk associated with a vapor space explosion in these tanks (i.e., upgrades are proposed for explosion prevention, not active confinement). Applicable excerpts from DSA Table 3.3-16 are included herein as Attachment 7.

Of these accidents listed above, the only accident for which an active confinement ventilation function would be meaningful would be the transfer error event. However, the proposed modification is appropriately aimed at preventing a PT overflow event in keeping with the control selection hierarchy.

As noted in the excerpt from DSA Section 3.3.3.1 above, the DOE approval of the Tank Farm DSA was not contingent upon the implementation of the Table 3.3-16 upgrades. As a condition of its continued approval, the DOE requires WSRC to prepare and submit an annual report (in concert with the annual DSA review/update effort) concerning the Table 3.3-16 upgrades. This report includes the following main elements:

- Assessment of operational experience with existing controls, including compensatory measures
- Scope definition statement for each proposed upgrade
- Rough cost estimate for each proposed upgrade
- Priority listing for implementation of the proposed upgrades
- Recommendations on additions, deletions, or revisions to the proposed upgrade listing

The most recent assessment was performed in support of the FY07 annual DSA update and documented in Reference 10. DOE is required to review and address this report in its Safety Evaluation Report for the annual update.

4.4 Summary of Backfit Results

The following discussion summarizes the principal vulnerabilities identified in the backfit analysis for the systems of interest.

4.4.1 Primary Waste Tank Ventilation Systems

The results of the backfit analyses for the primary waste tank ventilation systems are summarized in DSA Table 4.3-2 (included herein as Attachment 8) for Type I, II, and III/IIIA waste tanks (excluding Tank 50) and in DSA Table 4.4-2 (included herein as Attachment 9) for Type IV waste tanks and Tank 50. As discussed in Section 3.1.1, the primary waste tank ventilation systems serve a SC function (SS for Type IV Waste Tanks and Tank 50) to prevent an explosion during normal operations and an SS function to mitigate the consequences of an aerosolization event during normal operations. Therefore, the Type I, II, and III/IIIA waste tanks systems (excluding Tank 50) were evaluated against SC design criteria (Attachment 4) while the Type IV waste tanks and Tank 50 systems were evaluated against SS design criteria (Attachment 5). As discussed in Sections 2.1.2 and 3.1.1, the installed systems, including backup power, are not qualified to operate during or following an NPH event so that no credit is taken for these systems in any NPH-initiated accident scenario. This situation is reflected in the backfit analyses results presented in Attachments 8 and 9 such that the evaluations did not identify any gaps between the credited safety function and the NPH-related design criteria (i.e., system designs are consistent with the requirements of the DSA).

The following vulnerabilities were identified in the backfit analyses performed for the primary waste tank ventilation systems:

- systems lack explosion/fire resistance

- systems are susceptible to single active failures (including associated power supplies)
- Type I, II, III/IIIA systems do not meet SC electrical design requirements (e.g., separation, redundancy)
- systems lack internal hazard resistance

The acceptance of these vulnerabilities is documented in DSA Sections 4.3.12.3 (Type I, II, III/IIIA systems – excluding Tank 50) and 4.4.24.3 (Type IV and Tank 50 systems) and is predicated on the following compensatory measures/considerations:

- The Fire Protection Program provides control of combustible loading throughout the facility.
- The Flammability Control Program (SAC) ensures that a minimum of seven days is available following a loss of ventilation during normal operations before the waste tank vapor space would reach 100% of the LFL.
- The TSR requires that these systems be periodically surveilled to provide adequate time to detect a failure and restore equipment operability or to install and operate portable ventilation equipment.
- Multiple non-credited indicators (e.g., control room alarms and vacuum/pressure/differential pressure indicators) are available to alert the operator to a loss of ventilation.
- Loss of power could involve a localized loss of power, such as to an individual substation or motor control center, or could involve complete loss of offsite power. Operating experience at SRS has shown that, historically, complete loss of power events are of short duration. Power is available from other sources (e.g., diesel generators). Power is restored well within the seven days provided by the Flammability Control Program.

Achieving full compliance with the 2004-2 Table 5.1 SC/SS performance criteria would require the total replacement of the installed primary waste tank ventilation systems. Such an action was considered during the development of the Tank Farm DSA however, as discussed above, the identified vulnerabilities were judged to be acceptable. The principal vulnerability associated with the primary waste tank ventilation systems is their inability to accommodate a seismically-initiated release of trapped hydrogen within the waste tank. This vulnerability is recognized in DSA Table 3.3-16 (Attachment 7) which includes a proposed modification involving the design and installation of new SC waste tank ventilation systems, including flow instrumentation and interlocks, seismic qualification, and backup power, for those waste tanks that could become flammable within 7 days following a seismic event. This modification is estimated to cost $15,000,000-$20,000,000 per tank (Ref. 10). DSA Table 3.3-16 recognizes that even such a drastic modification may not prevent a post-seismic explosive mixture from forming within the waste tank vapor space, but could reduce the time at risk (i.e., the forced vapor exchange would minimize the time that the tank vapor space is at or above 100% of the LFL following a significant trapped gas release event). Thus, the proposed upgrade is targeted at minimizing the potential for an explosion, not at providing an active confinement function. This is appropriate given the relative residual risks associated with a waste tank explosion vice the other postulated release mechanisms. As discussed in Section 4.3.3, the DOE approval of the Tank Farm DSA is not contingent on the implementation of this modification.

4.4.2 Waste Tank Annulus Ventilation Systems

As discussed in Section 3.1.2 the installed annulus ventilation systems serve no active SC/SS function. The only credited safety function served by any of these systems is the SS defense in depth passive confinement capability (up to and including HEPA filters) of the Type I and II systems following a spill of waste into the annulus (non-seismic initiator). No backfit analysis was performed for the SS portion of

Type I and II annulus ventilation systems since the credited function is passive in nature (See Section 4.1 for a further discussion concerning this approach). All remaining portions of the Type I and II systems (including fan, motor, power supply, instrumentation, etc.) as well as the entire Type III/IIIA systems are not SC/SS. As such, the installed annulus ventilation systems do not meet a significant number of the DNFSB 2004-2 Table 5.1 SC or SS performance criteria. Achieving full compliance with these criteria would require the total replacement of the installed annulus ventilation systems. The cost of a fully compliant SS active confinement system would be approximately $10,000,000 per tank (based Transfer Facility SS ventilation system estimate in Ref. 10). Such an action was not contemplated during the development of the Tank Farm DSA given the very limited role that these systems serve in any of the postulated DBA events, and the presence of robust SC SSCs that serve as the primary control to prevent/mitigate the consequences of a release event.

During the development of this report a reviewer questioned whether the Tank Farm should consider modifying the Type I & II annulus ventilation systems to provide for a negative ventilation design and the Type III/IIIA annulus ventilation systems to provide for installed HEPA filtration capability. Such modifications would be very difficult, at best, to justify. For the case of a transfer line failure within the annulus space, a defense in depth control is required only for High Rem transfers. Such transfers are very rare. No High Rem transfer has been made since the current DSA was initially implemented in 2003 and it is estimated that no more than approximately ten such transfers may be made during the life of the High Level Waste system during future sludge removal campaigns (i.e., an exceedingly small fraction of the total number of planned transfers). For the case of an aerosolization event due to an annulus transfer jet failure, the current controls include the installation of a temporary ventilation system with HEPA filtration as a prerequisite to initiating a transfer from an annulus. Annulus transfers are very rare activities since the annulus normally contains no waste. Such transfers would require a significant failure of the SC PC-3 seismically qualified transfer piping or waste tank walls. Given this low frequency, the decision to rely on temporary equipment is appropriate. An additional consideration for Type III/IIIA waste tanks is that these waste tanks have never experienced any through wall leakage into the annulus. Therefore these annuli are radiologically clean resulting in no need for an installed annulus ventilation system HEPA. The lack of a HEPA filter in the Type III/IIIA systems has the beneficial effect of making the installed exhaust radiation monitors (Continuous Air Monitors) very effective leak detection devices. It is likely that a leak into the annulus would be detected by the installed exhaust monitor well before being detected by the annulus leak detection CPs, unless a catastrophic pipe/wall failure were to occur. This would provide for more timely detection and operator response. An installed HEPA filter would mask the monitors from an airborne release, thus rendering them less sensitive (in effect the monitors would provide a measure of HEPA filter bypass/break though versus a direct measure of annulus leak detection). Therefore, modifying the annulus ventilation systems in the manner described above would not result in any appreciable reduction in the residual risk associated with Tank Farm operations.

4.4.3 Diversion Box/ Pump Tank/Pump Pit Ventilation Systems

The results of the backfit analyses for the DB/PT/PP ventilation systems are summarized in DSA Table 4.4-2 (included herein as Attachment 9). As discussed in Sections 3.1.3, 3.1.4, and 3.1.5, the DB/PT/PP ventilation systems serve a SS function to prevent an explosion event during normal operations and to mitigate the consequences of an aerosolization or a leak/spill event during normal operations. Therefore, the DB/PT/PP ventilation systems were evaluated against SS design criteria (Attachment 5). As discussed in Section 2.2.3, the HDB-8 PVV system is the only DB/PT/PP ventilation system that has been qualified and credited to operate during or following an NPH event (PC-2 seismic). This situation is reflected in the backfit analyses results presented in Attachment 9 such that the

evaluations do not identify any gaps between the credited safety function and the NPH-related design criteria (i.e., system designs are consistent with the requirements of the DSA).

The backfit analyses for the DB/PT/PP ventilation systems identified the susceptibility to a single active failure (including a loss of power). The acceptance of this vulnerability is documented in DSA Sections 4.4.5.3, 4.4.9.3, and 4.4.10.3 and is predicated on the following compensatory measures/considerations:

- On loss of power to the ventilation systems, there will be sufficient time to restore power prior to a flammable mixture developing in a DB/PP that would reach 100% of the LFL, assuming that the transfer through the facility is terminated on a loss of ventilation (Non-HDB-8 DBs/PPs).
- The HDB-8 PVV system is provided with backup power to the exhaust fans by a SS standby diesel generator.
- The HDB-8 PVV system is provided with redundant fans and a SS interlock that ensures that the backup exhaust fan starts and dampers reposition following a low ventilation flow signal.
- The DBs/PPs normally contain little or no liquid. Barometric breathing alone will prevent exceeding 25% of the LFL for liquid volumes as great as 1.29% of the structure volume (0.39% for HDB-7 when the liquid is ESP Sludge Slurry).
- DBs/PPs are equipped with a leak detection system; an indication of a leak would require initiating operator investigation and securing associated transfers.
- There is a non-credited indication/alarm in the control room of ventilation fan status. Any loss of power to the fan would be identified and the necessary response actions initiated.
- Operators periodically monitor ventilation flow indication (TSR surveillances for non-HDB-8 facilities, not required for HDB-8 Complex due to SS low flow interlock) and HEPA differential pressure indication. Loss of power to or failure of the ventilation fan would result in a low flow/differential pressure condition and alert the operators to a potential problem.
- Mechanical failure would most likely be preceded by a long period of indications that the fan was failing. A relatively small amount of ventilation is required to maintain the DB/PP vapor space below 25% of the LFL. Even if a fan's flow were severely degraded, as long as the fan was rotating, ventilation would most likely be sufficient to prevent reaching 100% of the LFL.
- The manual dampers are passive in nature; once set, they will not move without operator action. In addition, periodic monitoring of the local flow indication would detect an improper damper alignment and operations would correct the problem.
- The HDB-8 air-operated fan suction dampers fail open of a loss of power or instrument air (causing purge bypass flow). The Event Response Program (SAC) requires operators to verify suction damper position as a post event response.
- When a non-HDB-8 PT is receiving a jetted transfer greater than 1200 gallons, a backup portable ventilation system will be installed and available for immediate use in case of a failure of the installed active ventilation system (See Section 3.1.4 for a further discussion of this compensatory measure).

Achieving full compliance with the 2004-2 Table 5.1 SS performance criteria would require the total replacement of the installed DB/PT/PP ventilation systems. Such an action was considered during the development of the Tank Farm DSA, however as discussed above, the identified vulnerabilities were judged to be acceptable. As discussed in Section 3.1.4, the principal vulnerability associated with the DB/PT/PP ventilation systems is their inability to prevent an explosion within a PT following a seismic event. This vulnerability is recognized in DSA Table 3.3-16 (Attachment 7) which includes a proposed modification involving the design and installation of new SS PT ventilation systems, including flow instrumentation and interlocks, seismic qualification, and backup power. The cost of a fully compliant SS active confinement system would be approximately $10,000,000 per transfer facility (Ref. 10). Additionally, DSA Table 3.3-16 includes a proposed modification to design and install passive ventilation for the DBs, PTs, and PPs to prevent the accumulation of flammable vapors within these facilities. Thus,

the proposed upgrades are targeted at providing a safety-related explosion prevention function, not an active confinement function. This is appropriate given the relative residual risks associated with a Transfer Facility explosion vice the other postulated release mechanisms. As discussed in Section 4.3.3, the DOE approval of the Tank Farm DSA is not contingent on the implementation of this modification.

5.0 Conclusions and Recommendations

5.1 Conclusions

The backfit analysis and vulnerability disposition efforts performed during the development of the Tank Farm DSA are fundamentally equivalent to the 2004-2 ventilation system evaluation requirements prescribed by the DOE in Reference 4. The DSA development effort included the identification and analysis of a broad spectrum of facility hazards resulting in the identification of SC and SS preventive and mitigative safety functions. Where existing SSCs were credited with performing these functions, a formal backfit analysis process was followed to assess the adequacy of the existing systems to comply with the applicable SC/SS design criteria. Vulnerabilities (i.e., gaps) that were identified by the backfit analyses were further subjected to a disposition process in which the vulnerabilities were eliminated, mitigated, or accepted. The results of these backfit and vulnerability disposition evaluations are clearly documented in the DSA and, as such, were fully considered by the DOE in their approval of the DSA.

As demonstrated in Attachment 6, the design criteria utilized in the backfit analyses, together with the TSR Surveillance Requirements and Administrative Controls, are consistent with the performance criteria specified in 2004-2 Table 5.1 with the exception of a post-accident release monitor as discussed in Section 4.2. Any differences in the criteria are minor and have no significant affect on the conclusions of the analyses. The existing primary waste tank and DB/PT/PP ventilation systems were found to have vulnerabilities, especially with respect to single failure tolerance and NPH capabilities. To fully overcome these vulnerabilities would require the replacement of the existing systems with new fully qualified SC/SS systems at a very significant cost. The conclusion, documented in the DSA and addressed on a continuing basis in the required annual Table 3.3-16 assessment, is that the existing systems are adequate to perform their intended safety functions and that the residual risk to the public, to SRS workers, and to the environment is acceptable.

Given the nature of the vulnerabilities and the modifications that would be needed to overcome them, there is no defined subset of the upgrades that would provide any meaningful reduction in risk at a reasonable cost. Therefore, the systems would have to be replaced in total. Selectively implementing partial modifications (e.g., providing redundant fans or seismically qualified instrumentation/ductwork) would be costly, but would not provide any substantive risk reduction. Furthermore, DSA Table 3.3-16 and its associated Implementation Plan define the prioritized listing of future modifications within the Tank Farms to address those vulnerabilities that have the highest residual risk. The expenditure of funds for active confinement ventilation system upgrades solely in response to 2004-2 issues would be inconsistent with the current upgrade priority listing already reviewed and approved by DOE. It is noted that the scope of the proposed Table 3.3-16 waste tank and PT ventilation upgrades would also satisfy many of the performance requirements for an active confinement ventilation system, but are intended to address explosion risk.

5.2 Recommendations

It is recommended that no further evaluations be performed to address DNFSB Recommendation 2004-2 for the Tank Farm Primary Waste Tank, Waste Tank Annulus, and Transfer Facility ventilation systems. The existing evaluations and documentation are sufficient to meet the intent and requirements of Reference 4. The Table 3.3-16 Implementation Plan (Ref. 10) provides an approved prioritized listing of Tank Farm facility upgrades to reduce the residual risk associated with Tank Farm operations. Therefore, it is further recommended that no facility modifications be made at this time and that the required annual DSA Table 3.3-16 assessment process be used to assess the adequacy of the existing SC/SS controls and proposed upgrades on a continuing basis.

6.0 References

1. WSRC-SA-2002-00007, *Concentration, Storage, and Transfer Facilities Documented Safety Analysis*, Revision 6, October 2006

2. Defense Nuclear Facilities Safety Board Recommendation 2004-2, *Active Confinement Systems*, December 7, 2004

3. U. S. Department of Energy, *Implementation Plan for Defense Nuclear Facilities Safety Board Recommendation 2004-2, Active Confinement Systems*" Revision 1, July 2006

4. U. S. Department of Energy, *Deliverables 8.5.4 and 8.7 of Implementation Plan for Defense Nuclear Safety Board Recommendation 2004-2, Ventilation System Evaluation Guidance for Safety-Related and Non-Safety-Related Systems*, Revision 0, January 2006

5. U. S. Department of Energy Memorandum, *Transmittal of Exclusion Reports for Office of Environmental Management Facilities*, I. R. Triay to R. L. Black, December 27, 2005

6. U. S. Department of Energy, DOE-STD-3009-94, *Preparation Guide for U. S. Department of Energy Nonreactor Nuclear Facility Safety Analysis Reports*, Change Notice No. 2, April 2002

7. WSRC Conduct of Engineering and Technical Support Manual E7, Procedure 2.25, *Functional Classifications*, Revision 14, August 31, 2004

8. WSRC Conduct of Engineering and Technical Support Manual E7, Procedure 3.41, *Backfit Analysis Process*, Revision 2, January 3, 2003

9. WSRC Liquid Waste Operations Manual S4 Procedure ENG.29, *Accident Analysis Input*, Revision 1, October 16, 2006

10. WSRC Memorandum LWO-LWE-2007-00042, *T. L. Ortner to R. L. Salizzoni, Annual Review of Documented Safety Analysis (DSA) Table 3.3-16 Equipment Modifications*, February 15, 2007

11. U. S. Department of Energy, DOE-HDBK-1169-2003, *Nuclear Air Cleaning Handbook*, November 2003

12. U. S. Department of Energy, DOE-STD-1027-92, *Hazard Categorization and Accident Analysis Techniques for Compliance With DOE Order 5480.23, Nuclear Safety Analysis Reports*, Change Notice No. 1, September 1997

13. U. S. Department of Energy, DOE-STD-1021-93, *Natural Phenomena Hazards Performance Categorization Guidelines for Structures, Systems, and Components*, Reaffirmed with Errata April 2002

14. WSRC ENG-STD-15888, *HEPA Filter Requirements*, Revision 4, April 15, 2004

15. S-TSR-G-00001, *Technical Safety Requirements, Savannah River Site Concentration, Storage, and Transfer Facilities*, Revision 13, October 2006

16. S-CLC-00260, *Accident Analysis of Aerosolization Events in CST Facilities*, Revision 0, May 2002

17. S-CLC-G-00207, *Tank Farm – Tank 5F, 12H, and 15H LPF During Seismic Event and Normal Operations*, Revision 0, April 2002

18. S-CLC-G-00257, *Accident Analysis of Tank Overheating Event*, Revision 0, May 2002

19. S-CLC-G-00236, *Transfer Errors, Overflows, Spills, Breaks, Leaks, Siphons, and Vehicle Crashes in the CST Transfer Facilities*, Revision 0, May 2002

20. WSRC Letter WSR-2005-0024, R. A. Pedde to J. M. Allison, *DNFSB 2004-2 Implementation Plan Deliverables 8.3, 8.4, 8.6, and 8.8*, December 8, 2005

21. S-CLC-G-00234, Explosion in a Transfer Line (CST SAR DBA Analysis) (U), Revision 0, May 2002

7.0 Attachments

1 DNFSB 2004-2 Table 4.3 - Primary Waste Tanks
2 DNFSB 2004-2 Table 4.3 - Waste Tank Annuli
3 DNFSB 2004-2 Table 4.3 - Transfer Facilities
4 Tank Farm DSA Table 4.2-1 - Design Requirements for Safety Class Structures, Systems, and Components
5 Tank Farm DSA Table 4.2-2 - Design Requirements for Safety Significant Structures, Systems, and Components
6 Comparison of DNFSB 2004-2 Table 5.1 Performance Criteria and Tank Farm Backfit Analysis Design/TSR Requirements
7 Applicable Excerpts from Tank Farm DSA Table 3.3-16 - Planned Equipment Upgrades
8 Tank Farm DSA Table 4.3-2 - Safety Class Evaluations - Type I, II, III/IIIA Primary Waste Tank Ventilation Systems (Excluding Tank 50)
9 Tank Farm DSA Table 4.4-2 – Safety Significant Evaluations – Diversion Box/Pump Pit Ventilation Systems & Tank 50/Type IV Primary Waste Tank Ventilation Systems

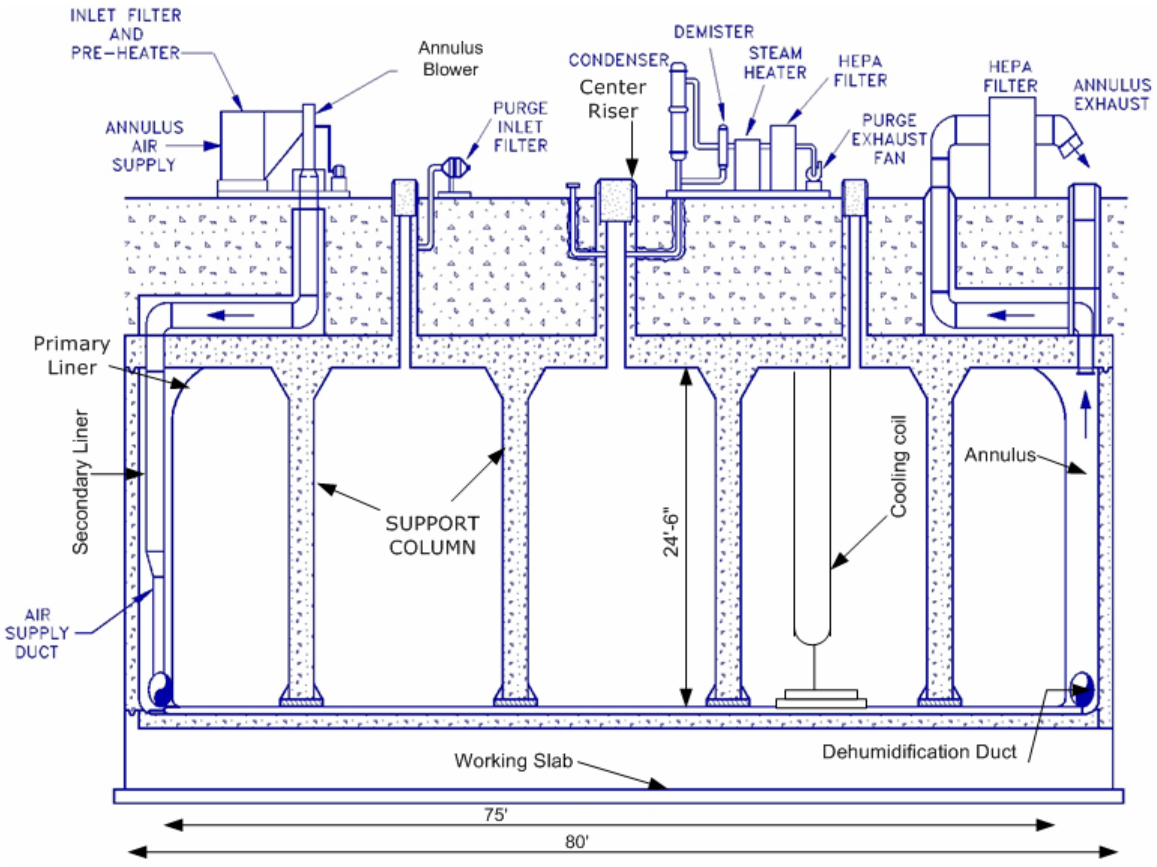

Figure 1

Type I Waste Tanks (Typical)

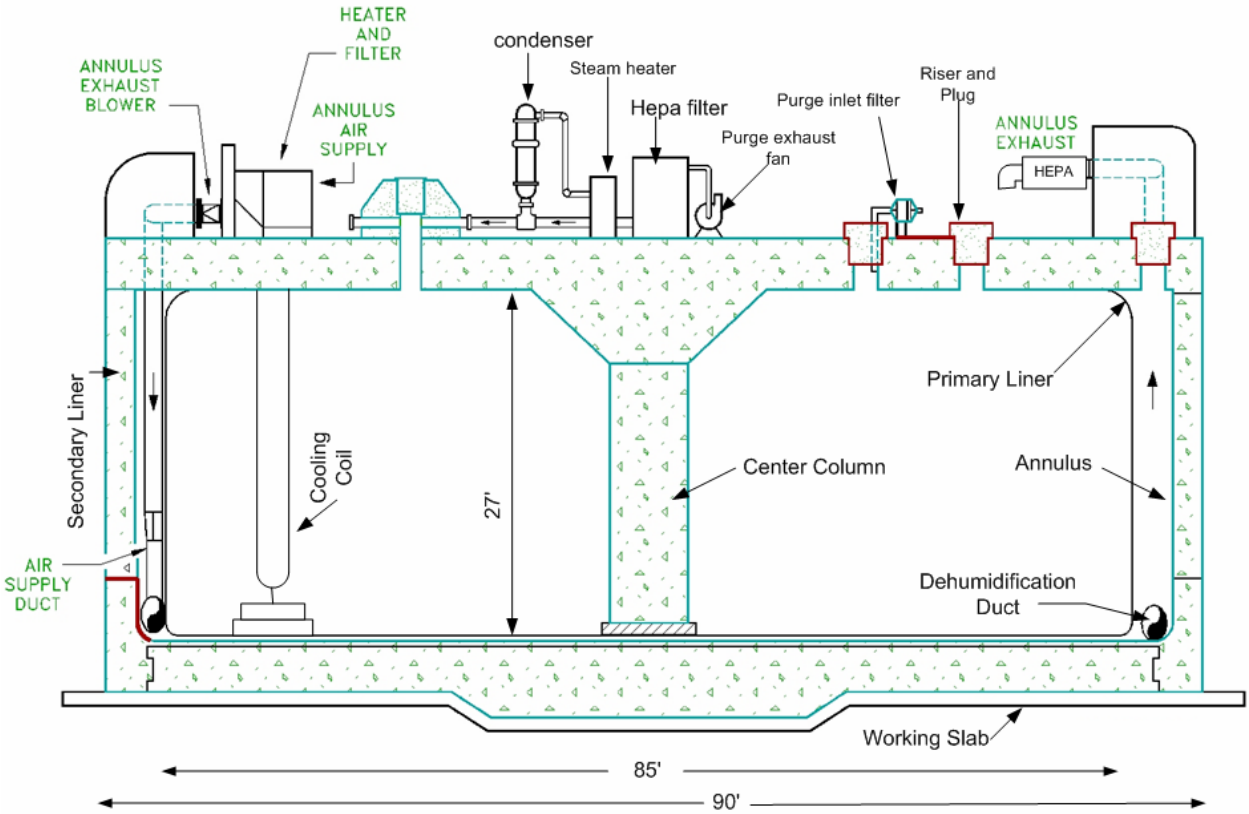

Figure 2

Type II Waste Tanks (Typical)

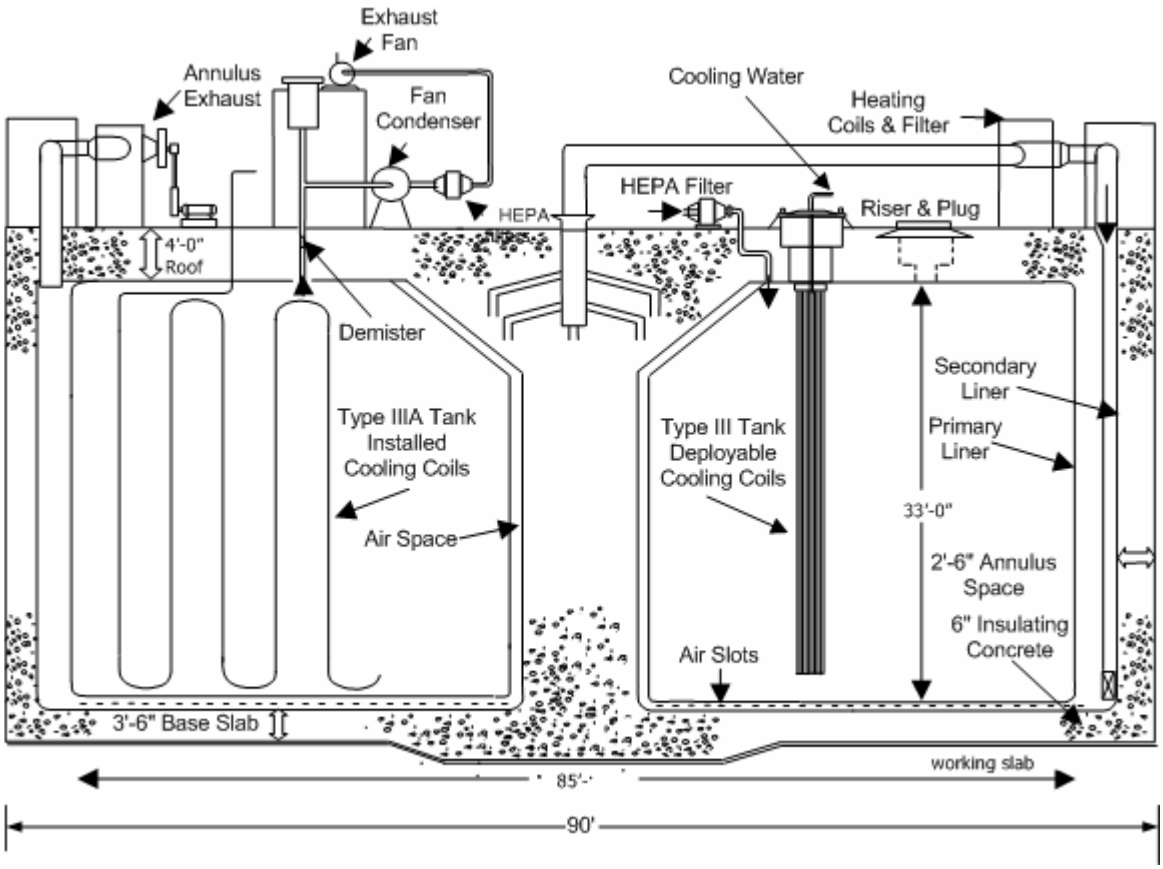

Figure 3

Type III/IIIA Waste Tanks (Typical)

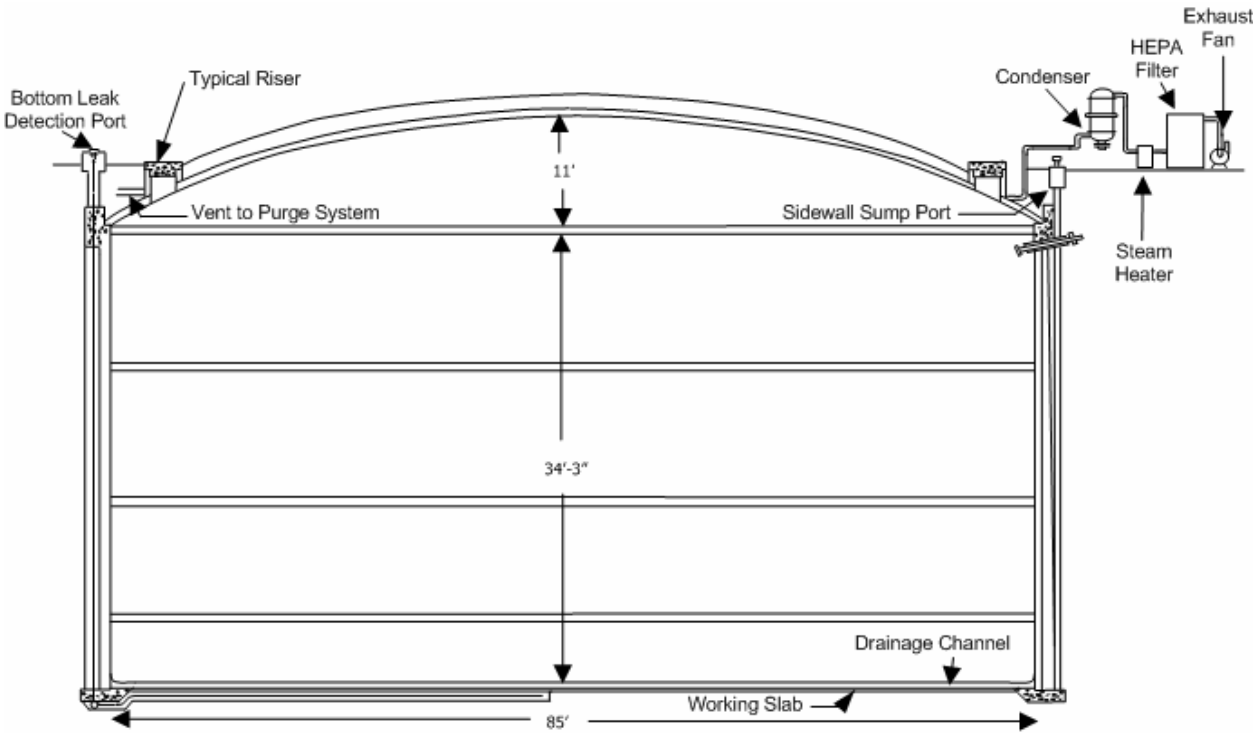

Figure 4

Type IV Waste Tanks (Typical)

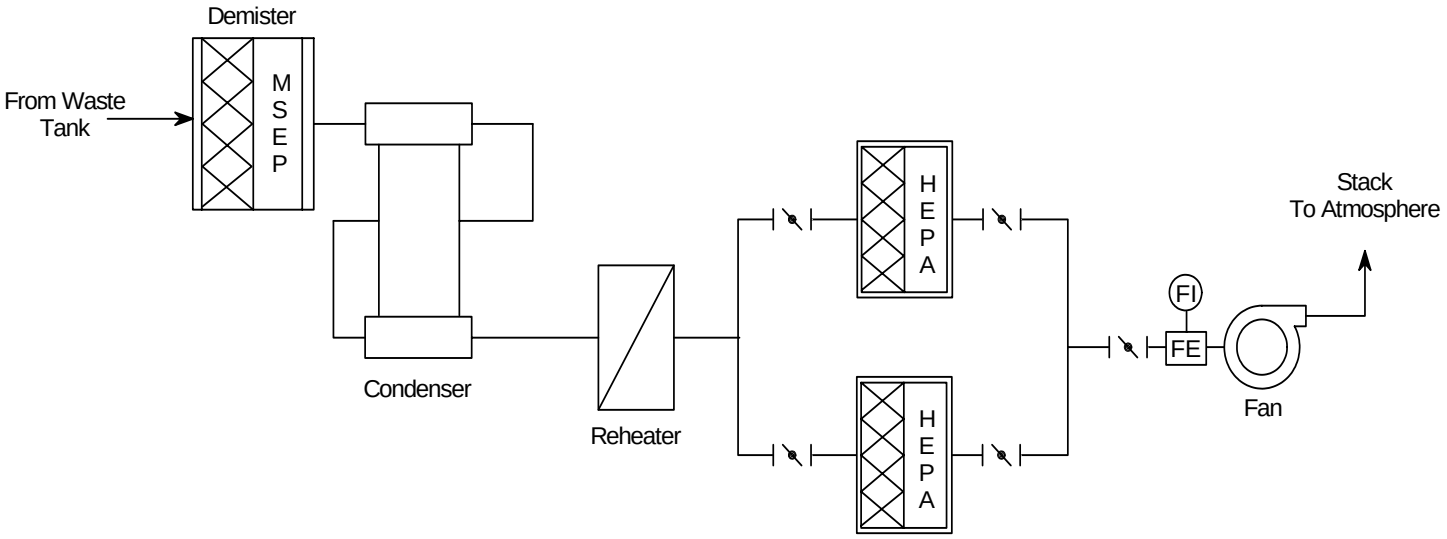

Figure 5

Primary Waste Tank Ventilation System (Typical)

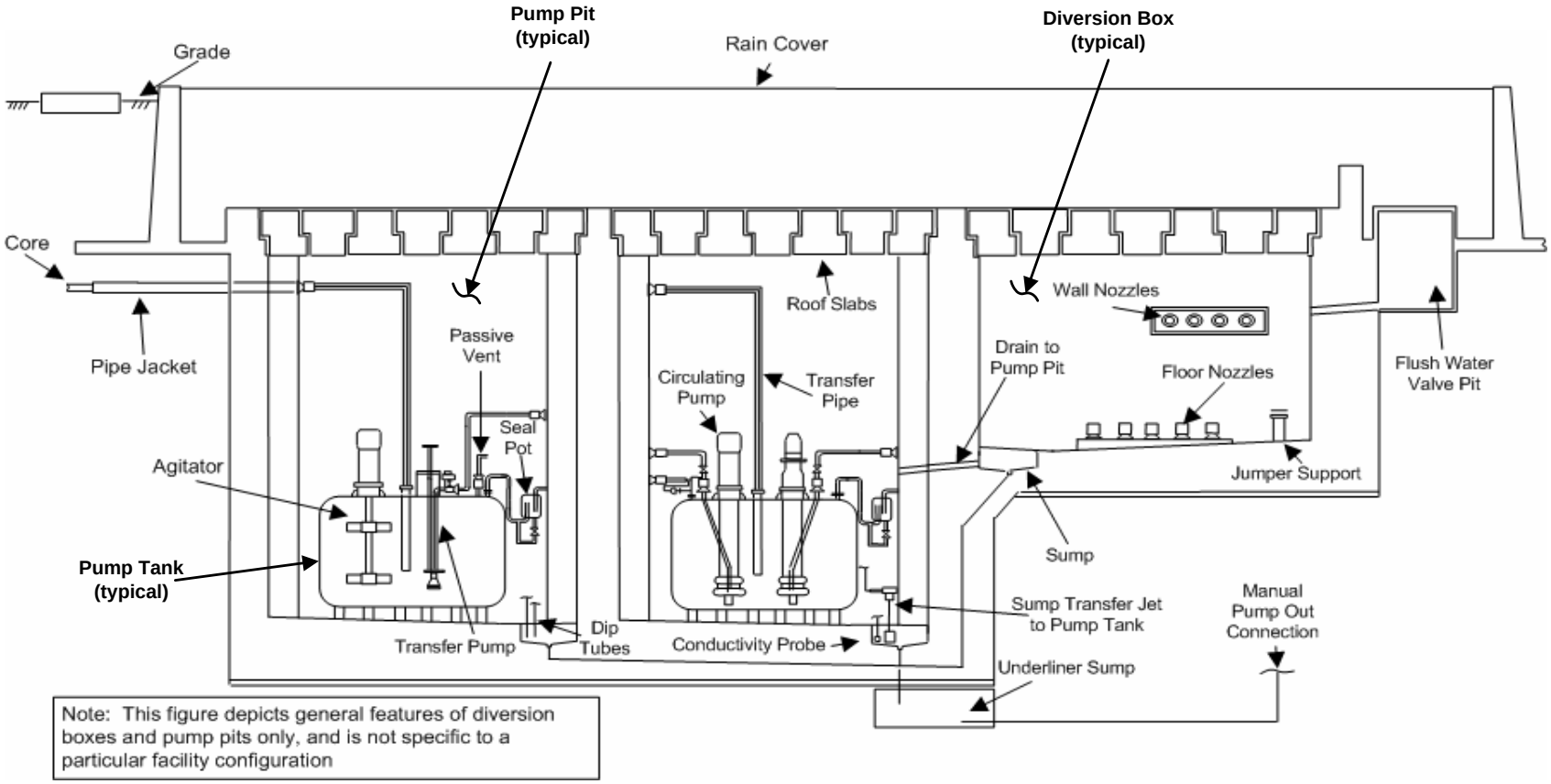

Figure 6

Diversion Box and Pump Pit (Typical)

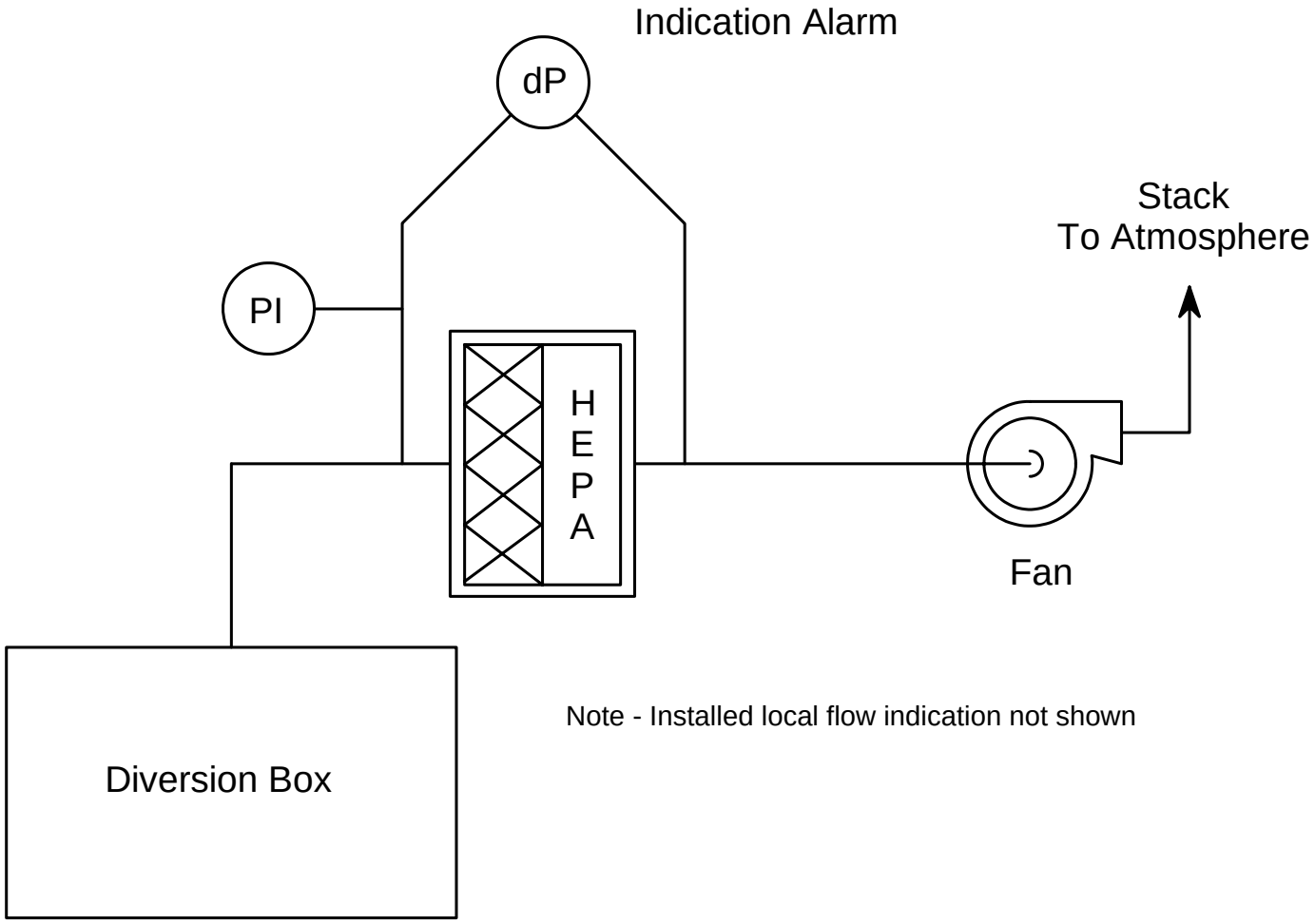

Figure 7

HDB-6 & 7 Ventilation Systems

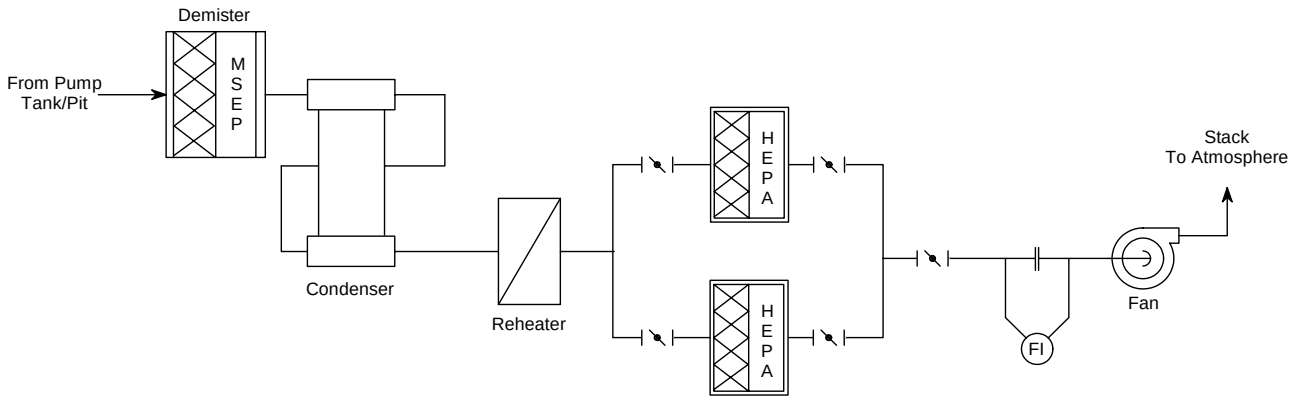

Figure 8

Pump Tank/Pump Pit/Diversion Box Ventilation System (Typical)

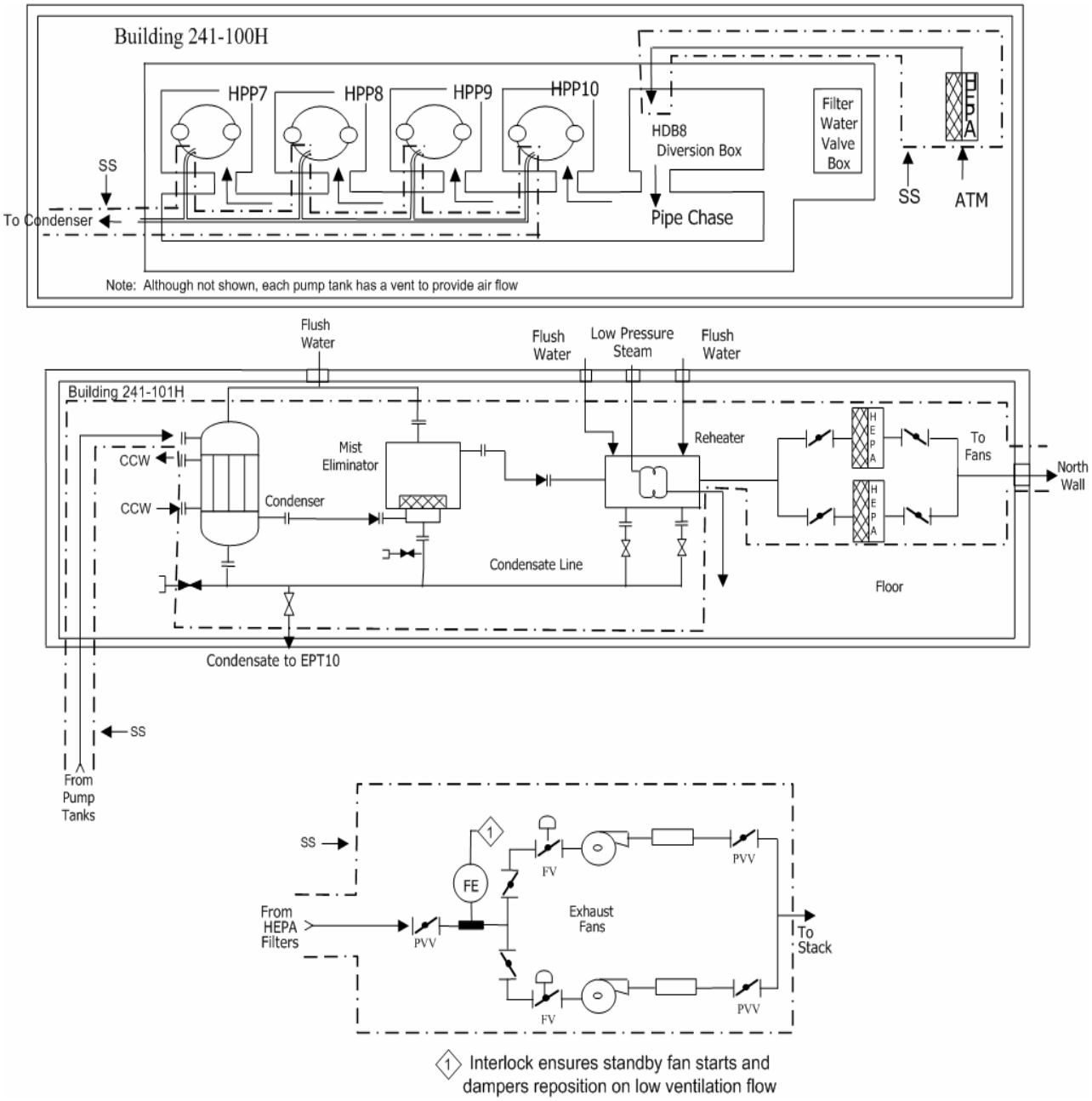

Figure 9

HDB-8 PVV System

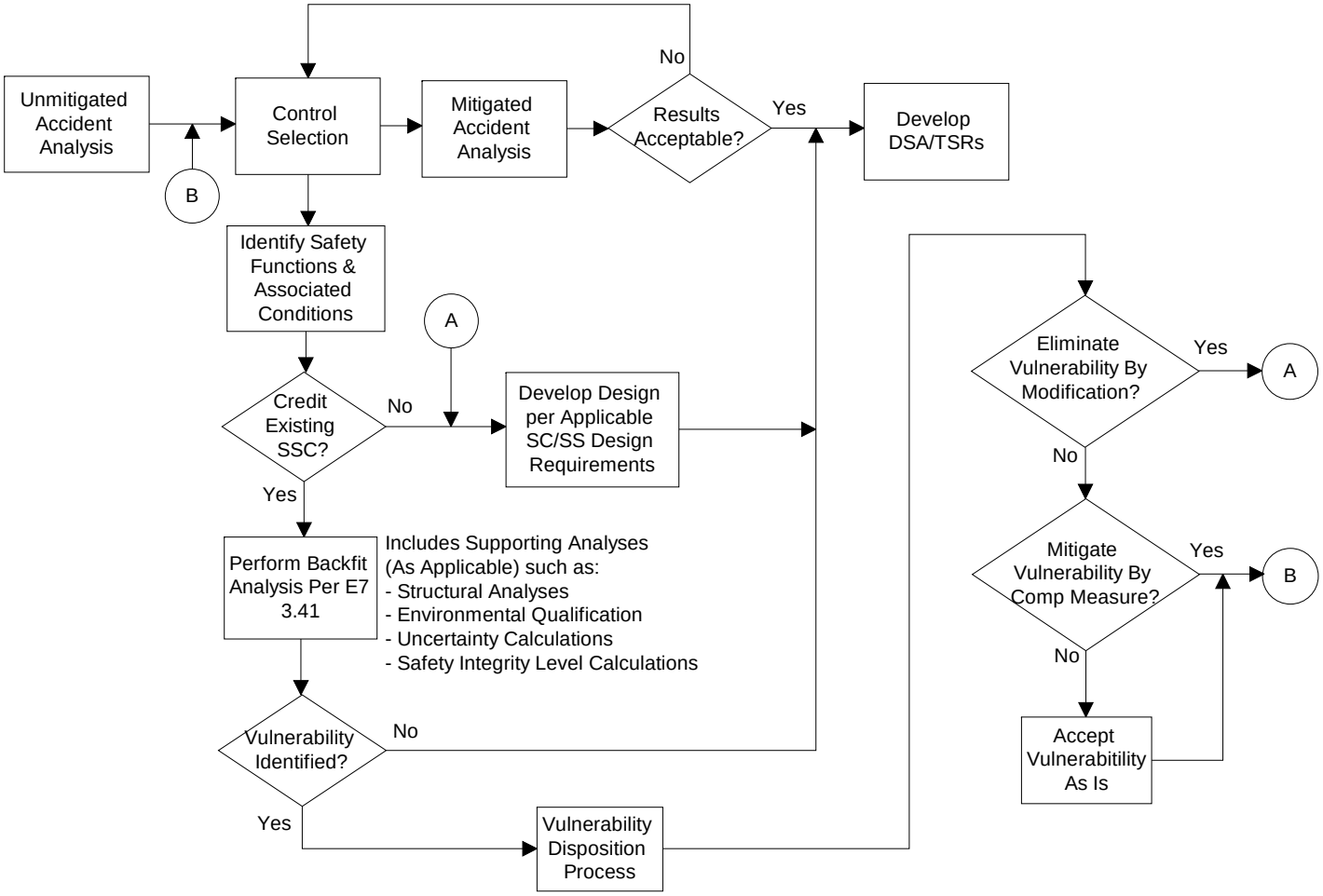

Figure 10

Tank Farm DSA Control Selection and Evaluation Process

Attachment 1

DNFSB 2004-2 Table 4.3
Primary Waste Tanks

Confinement Documented Safety Analysis Information[27]										
Tank Farms – Primary Waste Tanks				**Hazard Category 2**				**Performance Expectations**		
Bounding Accidents	**Type Confinement**		**Doses Bounding unmitigated / mitigated[1, 2]**	**Confinement Classification**			**Safety Function**	**Functional Requirements**	**Performance Criteria**	**Compensatory Measures**
	Active	**Passive**		**SC**	**SS**	**DID**				
Type I, II, III & IIIA Waste Tank Aerosolization Due to Steam Jet Failure (3.4.2.10)	X		Unmitigated[23] MOI ≤ 23 rem CW > 100 rem Mitigated MOI = 0 rem CW = 0 rem		X		Ventilation system provides confinement for public and collocated worker protection[3, 4]	Provide filtered ventilation pathway to mitigate radioactive releases during normal operations	Remain functional during normal operations with a minimum efficiency of 99.5%	None
Type IV Waste Tank Aerosolization Due to Steam Jet Failure (3.4.2.10)	X		Unmitigated[23] MOI ≤ 0.4 rem CW < 78 rem Mitigated MOI ≤ 0.4 rem CW = 0 rem		X		Ventilation system provides confinement for collocated worker protection[3, 4]	Provide filtered ventilation pathway to mitigate radioactive releases during normal operations	Remain functional during normal operations with a minimum efficiency of 99.5%	None
Waste Tank Aerosolization Due to Steam Jet Failure – Tornado and High Winds (3.4.2.17)			Unmitigated[23] MOI ≤ 23 rem CW > 100 rem Mitigated MOI = 0 rem CW = 0 rem				No credit is taken for confinement in this scenario[5]			

Confinement Documented Safety Analysis Information[27]										
Tank Farms – Primary Waste Tanks				**Hazard Category 2**				**Performance Expectations**		
Bounding Accidents	**Type Confinement**		**Doses Bounding unmitigated / mitigated[1, 2]**	**Confinement Classification**			**Safety Function**	**Functional Requirements**	**Performance Criteria**	**Compensatory Measures**
	Active	**Passive**		**SC**	**SS**	**DID**				
Waste Tank Aerosolization Due to Steam Jet Failure – Seismic (3.4.2.18)		X	Unmitigated[23] MOI ≤ 48 rem CW > 100 rem Mitigated MOI = 0 rem CW = 0 rem		X		Waste tank structure provides confinement for collocated worker protection[6]	Provide gross airborne confinement capability	Maintain structural integrity during and after a PC-3 seismic event	None
Waste Tank Aerosolization Due to Steam Jet Failure – Wildland Fire (3.4.2.19)			Unmitigated[23] MOI ≤ 23 rem CW > 100 rem Mitigated MOI = 0 rem CW = 0 rem				No credit is taken for confinement in this scenario[7]			
Type I, II, III, & IIIA Waste Tank Mixing Device Rooster Tailing (3.4.2.10) [11]	X		Unmitigated[23] MOI ≤ 3.6 rem CW > 100 rem Mitigated MOI ≤ 3.6 rem CW = 12.2 rem[8]		X		Ventilation system provides confinement for collocated worker protection[4, 9]	Provide filtered ventilation pathway to mitigate radioactive releases during normal operations	Remain functional during normal operations with a minimum efficiency of 99.5%	None

Confinement Documented Safety Analysis Information[27]										
Tank Farms – Primary Waste Tanks				**Hazard Category 2**				**Performance Expectations**		
Bounding Accidents	**Type Confinement**		**Doses Bounding unmitigated / mitigated[1, 2]**	**Confinement Classification**			**Safety Function**	**Functional Requirements**	**Performance Criteria**	**Compensatory Measures**
	Active	**Passive**		**SC**	**SS**	**DID**				
Type IV Waste Tank Mixing Device Rooster Tailing (3.4.2.10)[11]			Unmitigated[23] MOI < 3.6 rem CW ≤ 10 rem Mitigated[29] MOI < 3.6 rem CW ≤ 10 rem				No credit is taken for confinement in this scenario[10]			
Waste Tank Mixing Device Rooster Tailing – Tornado and High Winds (3.4.2.17)			Unmitigated[23] MOI ≤ 3.6 rem CW > 100 rem Mitigated MOI = 0 rem CW = 0 rem				No credit is taken for confinement in this scenario[5]			
Waste Tank Mixing Device Rooster Tailing – Wildland Fire (3.4.2.19)			Unmitigated[23] MOI ≤ 3.6 rem CW > 100 rem Mitigated MOI = 0 rem CW = 0 rem				No credit is taken for confinement in this scenario[7]			

Confinement Documented Safety Analysis Information[27]										
Tank Farms – Primary Waste Tanks				**Hazard Category 2**				**Performance Expectations**		
Bounding Accidents	**Type Confinement**		**Doses Bounding unmitigated / mitigated[1, 2]**	**Confinement Classification**			**Safety Function**	**Functional Requirements**	**Performance Criteria**	**Compensatory Measures**
	Active	**Passive**		**SC**	**SS**	**DID**				
Advanced Design Mixing Pump Column Air Leak (3.4.2.10)[12]	X		Unmitigated[23] MOI = 0.4 rem CW > 100 rem Mitigated MOI = 0.4 rem CW = 70 rem		X		Ventilation system provides confinement for collocated worker protection[4, 13]	Provide filtered ventilation pathway to mitigate radioactive releases during normal operations	Remain functional during normal operations with a minimum efficiency of 99.5%	None
Diaphragm Pump Aerosolization (3.4.2.10)[12]			Unmitigated[23] MOI = 0.05 rem CW = 52 rem Mitigated MOI = 0.05 rem CW = 52 rem				No credit is taken for confinement in this scenario[10]			
Aerosolization in a Dry Sludge Tank (3.4.2.10)	X	X	Unmitigated[24] MOI ≤ 0.2 rem CW > 100 rem Mitigated MOI ≤ 0.2 rem CW = 0.3 rem[14]		X		Ventilation system(s) provide confinement for collocated worker protection[15]	Provide filtered ventilation pathway to mitigate radioactive releases when large liquid additions are made during normal operations	Remain functional during normal operations with a minimum efficiency of 99.5%	None

Confinement Documented Safety Analysis Information[27]										
Tank Farms – Primary Waste Tanks				**Hazard Category 2**				**Performance Expectations**		
Bounding Accidents	**Type Confinement**		**Doses Bounding unmitigated / mitigated[1, 2]**	**Confinement Classification**			**Safety Function**	**Functional Requirements**	**Performance Criteria**	**Compensatory Measures**
	Active	**Passive**		**SC**	**SS**	**DID**				
Aerosolization in a Dry Sludge Tank – Tornado and High Winds (3.4.2.17)			Unmitigated[24] MOI ≤ 0.2 rem CW > 100 rem Mitigated MOI = 0 rem CW = 0 rem				No credit is taken for confinement in this scenario[5]			
Aerosolization in a Dry Sludge Tank - Seismic (3.4.2.18)			Unmitigated[24] MOI ≤ 0.2 rem CW > 100 rem Mitigated MOI < 0.01 rem CW = 0.3 rem				No credit is taken for confinement in this scenario[16]			
Aerosolization in a Dry Sludge Tank – Wildland Fire (3.4.2.19)			Unmitigated[24] MOI ≤ 0.2 rem CW > 100 rem Mitigated MOI = 0 rem CW = 0 rem				No credit is taken for confinement in this scenario[7]			

Confinement Documented Safety Analysis Information[27]										
Tank Farms – Primary Waste Tanks				**Hazard Category 2**				**Performance Expectations**		
Bounding Accidents	**Type Confinement**		**Doses Bounding unmitigated / mitigated[1, 2]**	**Confinement Classification**			**Safety Function**	**Functional Requirements**	**Performance Criteria**	**Compensatory Measures**
	Active	**Passive**		**SC**	**SS**	**DID**				
Type I, II, III, & IIIA Waste Tank Explosion (Excluding Tanks 48 & 50) (3.4.2.11)	X	X	Unmitigated[17] MOI > 25 rem CW > 100 rem Mitigated MOI = 0 rem CW = 0 rem	X	X		Ventilation system provides exhaust of explosive mixtures (SC). Waste tank structure provides confinement for public and collocated worker protection (SS)[18]	See Note 18	See Note 18	See Note 18
Tank 50 Waste Tank Explosion (3.4.2.11)	X		Unmitigated MOI < 0.1 rem CW = 41.4 rem Mitigated MOI < 0.1 rem CW = 0 rem		X		Exhaust of explosive mixtures for collocated worker protection[18]	See Note 18	See Note 18	See Note 18
Type IV Waste Tank Explosion (3.4.2.11)	X	X	Unmitigated MOI = 1.1 rem CW > 100 rem Mitigated MOI = 1.1 rem CW = 0 rem		X		Ventilation system provides exhaust of explosive mixtures. Waste tank structure provides confinement for collocated worker protection[18]	See Note 18	See Note 18	See Note 18

Confinement Documented Safety Analysis Information[27]										
Tank Farms – Primary Waste Tanks				**Hazard Category 2**				**Performance Expectations**		
Bounding Accidents	**Type Confinement**		**Doses Bounding unmitigated / mitigated[1, 2]**	**Confinement Classification**			**Safety Function**	**Functional Requirements**	**Performance Criteria**	**Compensatory Measures**
	Active	**Passive**		**SC**	**SS**	**DID**				
Waste Tank Explosion – Tornado and High Winds (3.4.2.17)		X	Unmitigated[17] MOI > 25 rem CW > 100 rem Mitigated MOI = 0 rem CW = 0 rem		X		Waste tank structure provides confinement for public and collocated worker protection[19]	Provide gross airborne confinement capability	See Note 19	See Note 19
Waste Tank Explosion - Seismic (3.4.2.18)		X	Unmitigated[17] MOI > 25 rem CW > 100 rem Mitigated[20] MOI > 25 rem CW > 100 rem		X		Waste tank structure provides confinement for public and collocated worker protection[21]	Provide gross airborne confinement capability	See Note 21	See Note 21
Waste Tank Explosion – Wildland Fire (3.4.2.19)		X	Unmitigated[17] MOI > 25 rem CW > 100 rem Mitigated MOI = 0 rem CW = 0 rem		X		Waste tank structure provides confinement for public and collocated worker protection[19]	Provide gross airborne confinement capability	See Note 19	See Note 19
Waste Tank Explosion – Loss Of Offsite Power (3.4.2.20)		X	Unmitigated[17] MOI > 25 rem CW > 100 rem Mitigated MOI = 0 rem CW = 0 rem		X		Waste tank structure provides confinement for public and collocated worker protection[19]	Provide gross airborne confinement capability	See Note 19	See Note 19

Confinement Documented Safety Analysis Information[27]										
Tank Farms – Primary Waste Tanks				**Hazard Category 2**				**Performance Expectations**		
Bounding Accidents	**Type Confinement**		**Doses Bounding unmitigated / mitigated[1, 2]**	**Confinement Classification**			**Safety Function**	**Functional Requirements**	**Performance Criteria**	**Compensatory Measures**
	Active	**Passive**		**SC**	**SS**	**DID**				
Waste Tank Overheat (3.4.2.13)			Unmitigated[28] MOI ≤ 0.1 rem CW ≤ 17 rem Mitigated MOI ≤ 0.1 rem CW ≤ 17 rem				No credit is taken for confinement in this scenario[10]			
Waste Tank Overheat – Tornado and High Winds (3.4.2.17)			Unmitigated[28] MOI < 0.01 rem CW = 8.7 rem Mitigated MOI < 0.01 rem CW = 8.7 rem				No credit is taken for confinement in this scenario[22]			
Waste Tank Overheat - Seismic (3.4.2.18)			Unmitigated[28] MOI < 0.01 rem CW = 8.7 rem Mitigated MOI < 0.01 rem CW = 8.7 rem				No credit is taken for confinement in this scenario[22]			
Waste Tank Overheat – Wildland Fire (3.4.2.19)			Unmitigated[28] MOI < 0.01 rem CW = 8.7 rem Mitigated MOI < 0.01 rem CW = 8.7 rem				No credit is taken for confinement in this scenario[22]			

Confinement Documented Safety Analysis Information[27]										
Tank Farms – Primary Waste Tanks				**Hazard Category 2**				**Performance Expectations**		
Bounding Accidents	**Type Confinement**		**Doses Bounding unmitigated / mitigated[1, 2]**	**Confinement Classification**			**Safety Function**	**Functional Requirements**	**Performance Criteria**	**Compensatory Measures**
	Active	**Passive**		**SC**	**SS**	**DID**				
Tank 48 Vapor Explosion (18.3.1)	X		Unmitigated MOI < 100 mrem CW < 100 mrem Mitigated MOI < 100 mrem CW = 0 rem		X		Inerting of tank vapor space[25]	Provide capability to inert tank vapor space with nitrogen	Maintain vapor space below Minimum Oxygen Concentration (8%) during specified evolutions	None
Tank 48 Vapor Explosion - Seismic (18.3.6)	X		Unmitigated MOI < 100 mrem CW < 100 mrem Mitigated MOI < 100 mrem CW = 0 rem		X		Portable ventilation equipment provides exhaust of explosive mixtures[26]	See Note 26	See Note 26	See Note 26

Notes for Primary Waste Tank Table 4.3:

1. MOI – Maximally Exposed Offsite Individual; CW – Collocated Worker (100 meters).
2. A Leak Path Factor (LPF) of 1.0 was used in the unmitigated analyses unless otherwise noted. All consequence dose and LPF values were taken from the DSA unless otherwise noted.
3. For these Waste Tank Aerosolization Due to Steam Jet Failure events, the first level of control (SC-Type I, II,III & IIIA Waste Tanks & SS – Type IV Waste Tanks) includes: (1) steam/air supply piping and transfer jets; (2) Transfer Control Program (Specific Administrative Control – SAC) to ensure independent verification of transfer jet discharge valve position prior to a jetted transfer; and (3) Transfer Control Program (SAC) to evaluate the possibility of core pipe pluggage due to salt solids formation following transfer shutdown.
4. For these waste tank aerosolization events, the primary waste tank ventilation system is credited as the second level of control (SS) to provide an active confinement function as a significant defense in depth control.
5. For the waste tank aerosolization events resulting from a tornado/high winds scenario, the first level of control (SC) is the Severe Weather Response Program (SAC) to ensure that all transfers, waste tank mixing devices, dry sludge tank large liquid additions, and Critical Lift activities are secured upon receipt of a high wind warning or a tornado watch/warning. This action eliminates the initiators for an aerosolization event.
6. For this scenario, the first level of control (SC – all Waste Tanks) is PC-3 seismically qualified steam/air supply and transfer jets. To provide significant defense in depth (SS), the primary waste tank is credited as the second level of control to provide passive gross airborne confinement capability.
7. For the waste tank aerosolization events resulting from a wildland fire scenario, the first level of control (SC) is the Event Response Program (SAC) to ensure that all transfers and waste tank mixing devices are secured in response to a wildland fire event. This action eliminates the initiators for an aerosolization event.
8. The mitigated onsite consequences for this event is zero for all scenarios except for operating two Submersible Mixing Pumps (SMPs) with only the motor cooling nozzles exposed. For this SMP scenario the unmitigated and mitigated onsite consequences (12.2 rem) do not challenge the Onsite Evaluation Guideline (EG) of 100 rem for the CW so that no controls are required.
9. For this event, the first level of control (SS) is the Waste Tank Mixing Device Operation Program (SAC) to ensure that waste tank mixing device operation in Type I, II, III, and IIIA waste tanks is controlled such that the waste tank mixing device discharge is sufficiently below the waste surface to prevent waste aerosolization.
10. No SC/SS controls are required for these events since the Offsite and Onsite EGs are not challenged.
11. A seismic event is not a credible initiator for a Waste Tank Mixing Device Rooster Tailing scenario.
12. Tornado/high winds, seismic, and wildland fire events are not credible initiators for an Advance Design Mixing Pump Column Air Leak or Diaphragm Pump scenario.
13. For this scenario, the first level of control (SS) is the air supply orifice to restrict air flow to the Advance Design Mixing Pump column.
14. There are two scenarios analyzed for the Aerosolization in a Dry Sludge Tank event. The bounding scenario (excessive addition of liquid) is prevented by SS controls (i.e., mitigated onsite consequences are zero). The unmitigated onsite consequences for the remaining scenario (dropped object) are 0.3 rem and, as such, no SC/SS controls are required. Therefore, the mitigated consequences for the dropped object scenario are the same as the unmitigated consequences.
15. For this scenario, the first level of control (SS) is the Liquid Addition Program (SAC) to ensure that planned liquid additions are controlled to minimize the potential for the release of dry sludge materials. Additionally this program shall include verification that active filtered ventilation is in place prior to making such additions. To provide significant defense in depth (SS), the primary waste tank and ventilation system up to and including the HEPA filter is credited to provide a passive confinement capability.

Notes for Primary Waste Tank Table 4.3: (Continued)

16. A seismic event is not a credible initiator for the liquid addition scenario, but is a credible initiator for the dropped object scenario. The unmitigated consequences for this scenario (<0.01 rem offsite & 0.3 rem onsite) do not challenge the applicable EGs and, as such, no controls are required. Therefore, the mitigated consequences for the dropped object scenario are the same as the unmitigated consequences.
17. No unmitigated analysis was performed for this scenario. Based upon past evaluations, the consequences of a Type I, II, III & IIIA Waste Tank explosion event (excluding Tanks 48 & 50) were judged to exceed both the Offsite and Onsite EGs.
18. During normal operations, a combination of SC and SS controls are credited to prevent a waste tank explosion event. The first level of control [SC - Type I, II, III & IIIA Waste Tanks (excluding Tank 50), SS - Type IV Waste Tanks and Tank 50] includes the: primary waste tank ventilation system to provide minimum required ventilation flow to maintain bulk vapor space flammable vapor concentration below the safety analysis limit; the Flammability Control Program (SAC) to ensure that the required minimum time to LFL following a loss of ventilation is established and tracked for each waste tank; the High Liquid Level Conductivity Probe (HLLCP) and control room alarm to protect the minimum vapor space volume assumed in the Flammability Control Program; and the Tank Fill Limit Program (SAC) to ensure that a fill limit is established and tracked for each waste tank (i.e., HLLCP setpoint). For Tank 50, periodic waste temperature monitoring is also credited as part of the first level of control to protect the maximum Isopar® L vapor space concentration assumed in the analysis. For all Tanks except Tank 50, addition levels of control are provided to provide significant defense in depth (Tank 50 consequences required only one level of control since on the immediate facility worker is at risk during the postulated event). These additional SS controls include periodic hydrogen monitoring along with the Flammability Control Program (SAC) to establish the flammable vapor concentration safety analysis limit and the gross airborne confinement capability of the primary waste tank. During certain evolutions that have the potential to release a significant quantity of trapped hydrogen (i.e., certain sludge agitation and salt removal activities), additional controls are required (excluding Tank 50), including a low ventilation flow interlock to automatically terminate these activities on low flow (SC – Type I, II, III, & IIIA Waste Tanks, SS – Type IV Waste Tanks) and a high hydrogen interlock to likewise automatically terminate these activities if high hydrogen levels are detected (SS). The tank ventilation systems and low flow interlocks are required to remain functional during normal operations. The low flow interlocks are required to be fail safe (i.e., interlock action occurs upon loss of power to the interlock loop). To account for single failure vulnerabilities in the installed ventilation systems, the Flammability Control Program will ensure that a minimum of at least seven days to LFL is maintained in each waste tank following a loss of ventilation. This provides sufficient time for Operations to diagnose the situation and take corrective action (repair the installed system or install and operate portable ventilation equipment) to prevent an explosive vapor concentration from accumulating within the tank vapor space.
19. For these events, Waste Tank Explosions are prevented by a combination of SC and SS controls. The installed equipment credited for explosion prevention during normal operation (e.g., waste tank ventilation) is assumed to fail during a tornado/high winds, wildland fire, or loss of power event. The first level of control (SC) is the Flammability Control Program (SAC) to ensure that a minimum of seven days to LFL is maintained in each waste tank. This provides sufficient time for Operations to diagnose the situation and take the appropriate corrective action to prevent an explosive vapor concentration from accumulating within the tank vapor space. The Loss of Power scenario is defined as a 12 hour duration event therefore, the seven days provides significant margin to LFL for this case. The HLLCP and control room alarm and the Tank Fill Limit Program (SAC) are also credited as part of the first level of control to protect the initial tank level conditions assumed in the Flammability Control Program. To provide significant defense in depth, the gross airborne confinement capability of the primary waste tank is credited as the second level of control (SS). The installed ventilation system is not required to remain functional during or following a tornado/high winds, wildland fire, or loss of power event.
20. Significant amounts of hydrogen can be trapped within the sludge or saltcake waste forms within the waste tanks. A seismic event can impart sufficient energetic motion within the waste, such that this trapped gas can be released during a seismic event. Given the potential release rates and seismic vulnerabilities associated with the installed ventilation and support equipment, it is assumed that at least one waste tank will reach LFL and explode. See Section 3.1.1 of this report for a more detailed discussion.

Notes for Primary Waste Tank Table 4.3: (Continued)

21. The controls for a seismically-initiated waste tank explosion event vary depending upon certain considerations. In every case however, the installed equipment credited for explosion prevention during normal operations (e.g., waste tank ventilation) is assumed to fail. Therefore no credit is taken for an active ventilation system during or following this event and the system and support equipment is not required to remain functional during or following a seismic event. In each case credit is taken for the gross airborne confinement capabilities of the primary waste tank to provide significant defense in depth (SS). For those tanks that are required to have the credited SC low ventilation flow interlocks (see Note 18), these interlocks are required to remain functional during and following a seismic event. These interlocks are required to be fail-safe should power be lost as a result of the seismic event.
22. During these events it is assumed that five waste tanks (four static tanks and one evaporator drop tank) are initially at saturated conditions and boil without any operator intervention. The four static tanks are assumed to boil due to radiolytic decay heat while the drop tank is assumed to boil due to the elevated temperature and high specific gravity of the evaporator drop material as well as radiolytic decay heat. The consequences represent the cumulative consequences for all five tanks and are included in the total consequences reported for the Tornado/High Winds, Seismic, and Wildland Fire events. Given the relatively low consequences associated with the overheat scenarios; no controls are required for these events. Note that the reported onsite consequences are very conservative since it is not expected that the same onsite individual would receive the entire 8.7 rem given the physical layout of the Tank Farms (i.e., it is very unlikely that all five tanks assumed to boil would be adjacent to one another such that a single receptor could physically be located 100 meters from all five tanks).
23. For these waste tank aerosolization events, an LPF of less than 1.0 was used in the unmitigated analyses. The LPFs used in the analyses accounted for particulate removal via deposition. Deposition is an aerosol removal process that does not depend on any engineered feature other than the physical presence of the structure into which the aerosol is released. The model used in the analyses was taken from Engelman, R. J., “Effectiveness of Sheltering in Buildings and Vehicles for Plutonium,” DE-90-016697 (or DOE/EH-0159T, UC-160), U. S. Department of Energy, Washington, DC, July 30, 1990. The model determines the LPF as a function of the deposition velocity of the aerosol, the air exchange rate of the area into which the aerosol is released, and the volume and surface area of the area into which the aerosol is release. See DSA Section 3.4.1.1.1 and Reference 16 for a more detailed discussion. Using this approach the following LPFs were calculated and used in the unmitigated analysis for each waste tank type: Type I = 0.67, Type II = 0.62, Type III/IIIA = 0.61, and Type IV = 0.56 (S-CLC-G-00260, Ref. 16).
24. For the dry sludge aerosolization events an LPF of 0.074 was used in the unmitigated analysis. This LPF was calculated using the CONTAIN code assuming that the dry sludge material impacted during the event could be modeled as sand with a density of 2 g/cc. See DSA Section 3.4.10.3 and Reference 17 for a more detailed discussion.
25. Although the consequences of a Tank 48 explosion event are well below the Offsite and Onsite Evaluation Guidelines, a set SS controls were credited to prevent such an event. During certain defined evolutions with the potential to release benzene from the waste (e.g., slurry pump operation), the first level of control is the Normal Nitrogen Purge Ventilation system to maintain an inert atmosphere within the tank vapor space. This system includes a nitrogen supply system to provide the inerting medium as well as a purge exhaust ventilation system that provides a filtered exhaust path out of the tank to sweep out flammable vapors. To provide significant defense in depth, continuous flammable vapor concentration monitoring (with control room alarm) is credited as the second level of control.

Notes for Primary Waste Tank Table 4.3: (Continued)

26. As discussed in Note 25 above, a set of SS controls were credited to prevent this event even though the consequences are well below the Evaluation Guidelines. The installed Normal Nitrogen Purge Ventilation system is not seismically qualified. To accommodate this vulnerability, the first level of control the Quiescent Time program (SAC) that requires slurry pumps to be periodically operated within Tank 48 to limit the benzene inventory within the waste. This program ensures that a minimum of nine days to LFL exists following a seismic event. To provide significant defense in depth, the Emergency Purge Ventilation Equipment is credited as the second level of control to provide a means to actively ventilate the tank vapor space thereby limiting the buildup of flammable vapors. The Emergency Purge Ventilation Equipment is stored locally and transported, installed, and operated on the tank following a seismic event and provides a filtered release path with a dedicated portable power supply.
27. For the purposes of this table the “confinement” information reflects any case in which a confinement function is credited for a DBA regardless of whether that confinement function is passive (e.g., gross airborne confinement capability of a structure is credited) or active (e.g., active ventilation system with HEPA filtration is credited) in nature.
28. The onsite consequence for the non-NPH case (17 rem) was taken from calculation S-CLC-G-00257 (Ref. 18). For these waste tank overheat events, an LPF of less than 1.0 was used in the unmitigated analyses. The LPF used in the analyses accounted for particulate removal via deposition. Deposition is an aerosol removal process that does not depend on any engineered feature other than the physical presence of the structure into which the aerosol is released. The model used in the analyses was taken from Engelman, R. J., “Effectiveness of Sheltering in Buildings and Vehicles for Plutonium,” DE-90-016697 (or DOE/EH-0159T, UC-160), U. S. Department of Energy, Washington, DC, July 30, 1990. The model determines the LPF as a function of the deposition velocity of the aerosol, the air exchange rate of the area into which the aerosol is released, and the volume and surface area of the area into which the aerosol is release. See DSA Section 3.4.1.1.1 and Reference 18 for a more detailed discussion. Using this approach an LPF of 0.67 was calculated and used in the unmitigated analysis (this bounding value was used for all waste tank types).
29. The unmitigated Offsite consequence of 3.6 rem for this event was judged not to challenge the 25 rem Offsite EG given the very conservative nature of the analysis.

Attachment 2

DNFSB 2004-2 Table 4.3
Waste Tank Annuli

Confinement Documented Safety Analysis Information[15]										
Tank Farms – Waste Tank Annuli				**Hazard Category 2**				**Performance Expectations**		
Bounding Accidents	**Type Confinement**		**Doses Bounding unmitigated / mitigated[1, 2]**	**Confinement Classification**			**Safety Function**	**Functional Requirements**	**Performance Criteria**	**Compensatory Measures**
	Active	**Passive**		**SC**	**SS**	**DID**				
Type I & II Waste Tank Annulus Spill Due to Core Pipe Failure (3.4.2.9)[13]		X	Unmitigated[14] MOI ≤ 0.19 rem CW > 100 rem Mitigated MOI ≤ 0.19 rem CW = 0 rem		X		See Note 3	See Note 3	See Note 3	None
Type III/IIIA Waste Tank Annulus Spill Due to Core Pipe Failure (3.4.2.9)[13]			Unmitigated[14] MOI ≤ 0.19 rem CW > 100 rem Mitigated MOI ≤ 0.19 rem CW = 0 rem				No credit is taken for confinement in this scenario[3]			
Waste Tank Annulus Spill Due to Core Pipe Failure - Seismic (3.4.2.18)		X	Unmitigated[14] MOI ≤ 0.19 rem CW > 100 rem Mitigated MOI < 0 rem CW = 0 rem	X			Waste tank annulus structure provides confinement for collocated worker protection[4]	Provide gross airborne confinement capability	Maintain structural integrity during and after a PC-3 seismic event	None

Confinement Documented Safety Analysis Information[15]										
Tank Farms – Waste Tank Annuli				**Hazard Category 2**				**Performance Expectations**		
Bounding Accidents	**Type Confinement**		**Doses Bounding unmitigated / mitigated[1, 2]**	**Confinement Classification**			**Safety Function**	**Functional Requirements**	**Performance Criteria**	**Compensatory Measures**
	Active	**Passive**		**SC**	**SS**	**DID**				
Waste Tank Annulus Aerosolization Due to Steam Jet Failure (3.4.2.10)	X		Unmitigated MOI ≤ 5 rem CW > 100 rem Mitigated MOI ≤ 5 rem CW = 0 rem		X		Portable ventilation system provides confinement for collocated worker protection[5]	See Note 5	See Note 5	See Note 5
Waste Tank Annulus Aerosolization Due to Steam Jet Failure – Tornado and High Winds (3.4.2.17)			Unmitigated MOI ≤ 5 rem CW > 100 rem Mitigated MOI = 0 rem CW = 0 rem				No credit is taken for confinement in this scenario[6]			
Waste Tank Annulus Aerosolization Due to Steam Jet Failure - Seismic (3.4.2.18)		X	Unmitigated MOI ≤ 5 rem CW > 100 rem Mitigated MOI = 0 rem CW = 0 rem	X			Waste tank annulus structure provides confinement for collocated worker protection[7]	Provide gross airborne confinement capability	Maintain structural integrity during and after a PC-3 seismic event	None

Confinement Documented Safety Analysis Information[15]										
Tank Farms – Waste Tank Annuli				**Hazard Category 2**				**Performance Expectations**		
Bounding Accidents	**Type Confinement**		**Doses Bounding unmitigated / mitigated[1, 2]**	**Confinement Classification**			**Safety Function**	**Functional Requirements**	**Performance Criteria**	**Compensatory Measures**
	Active	**Passive**		**SC**	**SS**	**DID**				
Waste Tank Annulus Aerosolization Due to Steam Jet Failure – Wildland Fire (3.4.2.19)			Unmitigated MOI ≤ 5 rem CW > 100 rem Mitigated MOI = 0 rem CW = 0 rem				No credit is taken for confinement in this scenario[8]			
Waste Tank Annulus Explosion (Non ESP Sludge Slurry) (3.4.2.12)[13]			Unmitigated MOI = 0.1 rem CW = 46 rem Mitigated MOI = 0.1 rem CW = 46 rem				No credit is taken for confinement in this scenario[9]			
Waste Tank Annulus Explosion (ESP Sludge Slurry) (3.4.2.12)[13]			Unmitigated[10] MOI > 25 rem CW > 100 rem Mitigated MOI = 0 rem CW = 0 rem				No credit is taken for confinement in this scenario[10]			

Confinement Documented Safety Analysis Information[15]										
Tank Farms – Waste Tank Annuli				**Hazard Category 2**				**Performance Expectations**		
Bounding Accidents	**Type Confinement**		**Doses Bounding unmitigated / mitigated[1, 2]**	**Confinement Classification**			**Safety Function**	**Functional Requirements**	**Performance Criteria**	**Compensatory Measures**
	Active	**Passive**		**SC**	**SS**	**DID**				
Waste Tank Annulus Explosion (Non-ESP Sludge Slurry) - Seismic (3.4.2.18)		X	Unmitigated MOI = 0.1 rem CW = 46 rem Mitigated MOI = 0 rem CW = 0 rem		X		Waste tank annulus structure provides confinement for collocated worker protection[9]	Provide gross airborne confinement capability	Maintain structural integrity during and after a PC-3 seismic event	None
Waste Tank Annulus Explosion (ESP Sludge Slurry) - Seismic (3.4.2.18)			Unmitigated[10] MOI > 25 rem CW > 100 rem Mitigated MOI = 0 rem CW = 0 rem				No credit is taken for confinement in this scenario[10]			
Waste Tank Wall Failure (3.4.2.14)[13]			Unmitigated MOI < 0.1 rem CW = 2.6 rem Mitigated MOI < 0.1 rem CW = 2.6 rem				No credit is taken for confinement in this scenario[11]			

Confinement Documented Safety Analysis Information[15]										
Tank Farms – Waste Tank Annuli				**Hazard Category 2**				**Performance Expectations**		
Bounding Accidents	**Type Confinement**		**Doses Bounding unmitigated / mitigated[1, 2]**	**Confinement Classification**			**Safety Function**	**Functional Requirements**	**Performance Criteria**	**Compensatory Measures**
	Active	**Passive**		**SC**	**SS**	**DID**				
Waste Tank Wall Failure – Seismic (3.4.2.18)			Unmitigated MOI < 0.1 rem CW = 8 rem Mitigated MOI < 0.1 rem CW = 8 rem				No credit is taken for confinement in this scenario[12]			

Notes for Waste Tank Annuli Table 4.3:

1. MOI – Maximally Exposed Offsite Individual; CW – Collocated Worker (100 meters)
2. The unmitigated analysis assumed a LPF = 1.0 for all waste tank annulus events. Additionally, the consequence dose and LPF values were taken from the DSA unless otherwise noted.
3. For these events, the first level of control (SS) is the core pipe integrity to prevent the spill from occurring. To provide significant defense in depth (SS) for High Rem transfers (i.e., waste with an inhalation dose potential > 2.0 E+08 rem/gal), the waste tank annulus structure is credited to provide a passive gross airborne confinement function as the second level of control for Type I and II waste tanks while the annulus conductivity probes, control room alarms, and equipment need to stop waste transfers are credited as the second level of control for Type III/IIIA waste tanks. For Type I and II waste tanks the annulus ventilation ductwork up to, and including, the HEPA filter, is also credited as part of the second level of control should the installed non-credited annulus ventilation system be operating at the time of the leak. No significant defense in depth controls were judged to be required for Low Rem transfers (i.e., waste with an inhalation dose potential ≤ 2.0 E+08 rem/gal). The difference in the controls for between Type I & II and Type III/IIIA waste tanks is an artifact of the design of the Type III/IIIA annulus ventilation system (no installed HEPA filters).
4. For this event, the first level of control (SC) is the PC-3 seismically qualified core pipe to prevent the spill from occurring. To provide significant defense in depth (SC), the gross airborne confinement capability of the waste tank annulus structure is credited as the second level of control. Annuli structures are PC-3 seismically qualified as an integral part of the waste tank structures.
5. For this event, the first level of control (SS) includes the integrity of the steam/air supply piping and transfer jets. The Transfers from Waste Tank Annuli Program (SAC) is credited as a significant defense in depth control (SS). This program ensures that a negative pressure, filtered ventilation system is installed and operating prior to initiating a jetted transfer from a waste tank annulus. The installed annulus ventilation systems do not meet these criteria (negative pressure and filtered).

Notes for Waste Tank Annuli Table 4.3: (Continued)

6. For this event, the first level of control (SC) is the Severe Weather Response Program (SAC) to ensure that all transfers are secured upon receipt of a high wind warning or a tornado watch/warning. This action eliminates the initiators for an aerosolization event.
7. For this scenario, the first level of control (SC – all Waste Tanks) includes PC-3 seismically qualified steam/air supply and transfer jets. To provide significant defense in depth (SC), the waste tank annulus structure is credited to provide gross airborne confinement capability. Annuli structures are PC-3 seismically qualified as an integral part of the waste tank structures.
8. For this scenario, the first level of control (SC) is the Event Response Program (SAC) to ensure that all transfers and waste tank mixing devices are secured in response to a wildland fire event. This action eliminates the initiators for an aerosolization event.
9. In this scenario, the bulk annulus vapor space does not reach LFL within the 10 day accident duration timeframe. However, the ventilation ductwork within the Type III/IIIA Waste Tanks annuli does exceed LFL, but does not reach the Lower Explosive Limit (LEL) within this same timeframe (bounding case is a leak from a waste transfer line that traverses the annulus space). The consequences reported are therefore, associated with a ductwork deflagration in these tanks (Due to design configuration differences, the Type I and II Waste Tanks are not vulnerable to this specific scenario and thus, do reach LFL). The flammable vapor removal function of the installed Type III/IIIA annulus ventilation systems would be rendered ineffective due to the submergence of the annulus ductwork by the waste that is leaked into the annulus. No SC/SS controls are required for the non-seismic case since the Offsite and Onsite EGs are not challenged. For the seismic case, the first level of control (SC PC-3 seismically qualified) is the primary waste tank (tank wall leak case) and the transfer core pipe (core pipe leak case). To provide significant defense in depth the gross airborne confinement capability of the annulus waste tank structure is credited as the second level of control (SC PC-3 seismically qualified).
10. In this scenario, the Tank 40 bulk annulus vapor space does not reach LFL within the 10 day accident duration timeframe. However, the Tank 40 annulus ventilation ductwork does exceed LEL within this same timeframe (bounding case is a leak from a waste transfer line that traverses the annulus space). The consequences reported are therefore, associated with a ductwork detonation (Due to Safety Basis restrictions on allowable transfer paths associated with the ESP Sludge Slurry MAR, this event is only applicable to the Tank 40 annulus). The detonation is assumed to result in a gross failure of the primary waste tank. The consequences of the Tank 40 ductwork detonation and subsequent tank failure were judged to exceed both the Offsite and Onsite EGs (i.e., no specified quantitative analyses were performed). The flammable vapor removal function of the installed Tank 40 annulus ventilation system would be rendered ineffective due to the submergence of the annulus ductwork by the waste that is leaked into the annulus. For this event, the first level of control is the transfer core pipe (SC PC-3 seismically qualified) to ensure the structural integrity of this piping such that no leak will occur. To provide significant defense in depth (SS) the transfer pipe jacket (PC-3 seismically qualified) is also credited to contain a potential leak from the core pipe.
11. No SC/SS controls are required for this event since the Offsite and Onsite EGs are not challenged. However, to provide initial condition assumption protection those SC controls associated the integrity of the Type I, II, III & IIIA Waste Tanks are credited (Waste Tanks, HLLCPs & associated control room alarms, and the Waste Tank Fill Limits Program [SAC]).

Notes for Waste Tank Annuli Table 4.3: (Continued)

12. In this scenario it is assumed that the seismic event results in the reinitiation of leaks from pre-existing leak sites in Type I and II Waste Tanks (total of 4 gpm per tank). The Offsite consequences reflect the cumulative consequences from 15 tank wall failures (i.e., all Type I and II Waste Tanks). The Onsite consequences reflect the cumulative consequences from eight tank wall failures (i.e., all Type I and II Waste Tanks in F Tank Farm – no single individual can be 100 meters from both F and H Tank Farms). The only controls credited for this event are those associated with the integrity of the Type I, II, III & IIIA Waste Tanks as discussed above in Note 11. The unmitigated analysis also considered the consequences of a tank top collapse scenario for Type IV Waste Tanks (not PC-3 seismically qualified) and waste tanks that are in the Removed From Service Mode (maintenance of structural integrity for tanks in this mode is not required). The scenario is not included in this table since an annulus ventilation system would have no effect on the consequences resulting from a Type I, II, III or IIIA tank top collapse (assumes gross structural failure) or would not be applicable (Type IV Waste Tanks have no annuli).
13. Tornado/High Winds and Wildland Fire events are not credible initiators for a waste tank annulus spill (Due to Core Pipe Failure), waste tank annulus explosion, or a waste tank wall failure event.
14. The Offsite consequence dose value for the waste tank annulus spill (Due to Core Pipe Failure) event was taken from S-CLC-G-00236 (Ref. 19), Revision 0 (consequence associated with High Rem transfer in H Tank Farm). As discussed in Note 3 above, no SC controls are required for the non-seismic cases; therefore the unmitigated and mitigated Offsite consequences are the same. The Onsite consequence dose values for this event were taken from the DSA.
15. For the purposes of this table the “confinement” information reflects any case in which a confinement function is credited for a DBA regardless of whether that confinement function is passive (e.g., gross airborne confinement capability of a structure is credited) or active (e.g., active ventilation system with HEPA filtration is credited) in nature.

Attachment 3

DNFSB 2004-2 Table 4.3
Transfer Facilities

Confinement Documented Safety Analysis Information[35]										
Tank Farms – Transfer Facilities[1]				**Hazard Category 2**				**Performance Expectations**		
Bounding Accidents	**Type Confinement**		**Doses Bounding unmitigated / mitigated[2, 3]**	**Confinement Classification**			**Safety Function**	**Functional Requirements**	**Performance Criteria**	**Compensatory Measures**
	Active	**Passive**		**SC**	**SS**	**DID**				
Transfer Facility Fire (3.4.2.5)			Unmitigated MOI < 1 rem CW = 28.5 rem Mitigated MOI < 1 rem CW = 28.5 rem				No credit is taken for confinement in this scenario[4]			
Transfer Core Pipe Explosion (3.4.2.6)		X	Unmitigated[33] MOI < 1 rem CW > 100 rem Mitigated MOI < 1 rem CW = 26.5 rem		X		Diversion Box/ Pump Pit structure provides confinement for collocated worker protection[5]	Provide gross airborne confinement capability	Maintain structural integrity during normal operations	None
Diversion Box Explosion (3.4.2.7)	X		Unmitigated MOI = 0.54 rem CW > 100 rem Mitigated MOI = 0.54 rem CW = 0 rem		X		Ventilation system provides active exhaust of explosive mixtures[6]	See Note 6	See Note 6	None
Diversion Box Explosion – Tornado/High Winds (3.4.2.17)		X	Unmitigated MOI = 0.54 rem CW > 100 rem Mitigated MOI = 0 rem CW = 0 rem		X		Diversion Box structure provides confinement for public and collocated worker protection[7]	Provide gross airborne confinement capability	Maintain structural integrity during normal operations[8]	None

Confinement Documented Safety Analysis Information[35]										
Tank Farms – Transfer Facilities[1]				**Hazard Category 2**				**Performance Expectations**		
Bounding Accidents	**Type Confinement**		**Doses Bounding unmitigated / mitigated[2, 3]**	**Confinement Classification**			**Safety Function**	**Functional Requirements**	**Performance Criteria**	**Compensatory Measures**
	Active	**Passive**		**SC**	**SS**	**DID**				
Diversion Box Explosion – Seismic (3.4.2.18)		X	Unmitigated MOI = 0.54 rem CW > 100 rem Mitigated MOI = 0 rem CW = 0 rem	X			Diversion Box structure provides confinement for public and collocated worker protection[9]	Provide gross airborne confinement capability	Maintain structural integrity during and following a PC-3 seismic event	None
Diversion Box Explosion– Wildland Fire (3.4.2.19)		X	Unmitigated MOI = 0.54 rem CW > 100 rem Mitigated MOI = 0 rem CW = 0 rem		X		Diversion Box structure provides confinement for public and collocated worker protection[10]	Provide gross airborne confinement capability	Maintain structural integrity during and following a wildland fire event	None
Pump Pit Explosion – Tornado/High Winds (3.4.2.17)		X	Unmitigated See Note 11 Mitigated MOI = 0 rem CW = 0 rem		X		Pump Pit structure provides confinement for public and collocated worker protection[12]	Provide gross airborne confinement capability	Maintain structural integrity during normal operations[8]	None

Confinement Documented Safety Analysis Information[35]										
Tank Farms – Transfer Facilities[1]				**Hazard Category 2**				**Performance Expectations**		
Bounding Accidents	**Type Confinement**		**Doses Bounding unmitigated / mitigated[2, 3]**	**Confinement Classification**			**Safety Function**	**Functional Requirements**	**Performance Criteria**	**Compensatory Measures**
	Active	**Passive**		**SC**	**SS**	**DID**				
Pump Pit Explosion – Seismic (3.4.2.18)		X	Unmitigated See Note 11 Mitigated MOI = 0 rem CW = 0 rem	X			Pump Pit structure provides confinement for public and collocated worker protection[13]	Provide gross airborne confinement capability	Maintain structural integrity during and following a PC-3 seismic event	None
Pump Pit Explosion – Wildland Fire (3.4.2.19)		X	Unmitigated See Note 11 Mitigated MOI = 0 rem CW = 0 rem		X		Pump Pit structure provides confinement for public and collocated worker protection[14]	Provide gross airborne confinement capability	Maintain structural integrity during and following a wildland fire event	None
Pump Tank Explosion (3.4.2.8)	X	X	Unmitigated MOI = 0.66 rem CW > 100 rem Mitigated MOI = 0.66 rem CW = 0 rem		X		Ventilation system provides active exhaust of explosive mixtures. Pump Pit structure provides passive confinement for collocated worker protection[15]	See Note 15	See Note 15	See Note 15

Confinement Documented Safety Analysis Information[35]										
Tank Farms – Transfer Facilities[1]				**Hazard Category 2**				**Performance Expectations**		
Bounding Accidents	**Type Confinement**		**Doses Bounding unmitigated / mitigated[2, 3]**	**Confinement Classification**			**Safety Function**	**Functional Requirements**	**Performance Criteria**	**Compensatory Measures**
	Active	**Passive**		**SC**	**SS**	**DID**				
Pump Tank Explosion – Tornado/High Winds (3.4.2.17)		X	Unmitigated MOI = 0.66 rem CW > 100 rem Mitigated MOI = 0 rem CW = 0 rem		X		Pump Pit structure provides confinement for public and collocated worker protection[12]	Provide gross airborne confinement capability	Maintain structural integrity during normal operations[8]	None
Pump Tank Explosion – Seismic (3.4.2.18)	X	X	Unmitigated[16] MOI = 3.96 rem CW > 100 rem Mitigated[16] MOI = 3.96 rem CW > 100 rem	X	X		PVV system provides active exhaust of explosive mixtures (HDB-8 Pump Tanks). Passive vents provide passive exhaust of explosive mixtures (non HDB-8 Pump Tanks). Pump Pit structure provides passive confinement for collocated worker protection[17]	See Note 17	See Note 17	None

Confinement Documented Safety Analysis Information[35]										
Tank Farms – Transfer Facilities[1]				**Hazard Category 2**				**Performance Expectations**		
Bounding Accidents	**Type Confinement**		**Doses Bounding unmitigated / mitigated[2, 3]**	**Confinement Classification**			**Safety Function**	**Functional Requirements**	**Performance Criteria**	**Compensatory Measures**
	Active	**Passive**		**SC**	**SS**	**DID**				
Pump Tank Explosion – Wildland Fire (3.4.2.19)		X	Unmitigated MOI = 0.66 rem CW > 100 rem Mitigated MOI = 0 rem CW = 0 rem		X		Pump Pit structure provides confinement for collocated worker protection[14]	Provide gross airborne confinement capability	Maintain structural integrity during and following a wildland fire event	None
Pump Tank Explosion – Loss of Power (3.4.2.20)	X	X	Unmitigated MOI = 0.66 rem CW > 100 rem Mitigated MOI = 0 rem CW = 0 rem		X		Active exhaust of explosive mixtures and passive confinement for collocated worker protection[18]	See Note 18	See Note 18	See Note 18
Transfer Error (Pump Tank Overflow) (3.4.2.9)		X	Unmitigated[34] MOI ≤ 0.19 rem CW > 100 rem Mitigated MOI ≤ 0.19 rem CW = 15.4 rem		X		Pump Pit structure provides confinement for collocated worker protection[19]	Provide gross airborne confinement capability	Maintain structural integrity during normal operations	None

Confinement Documented Safety Analysis Information[35]										
Tank Farms – Transfer Facilities[1]				**Hazard Category 2**				**Performance Expectations**		
Bounding Accidents	**Type Confinement**		**Doses Bounding unmitigated / mitigated[2, 3]**	**Confinement Classification**			**Safety Function**	**Functional Requirements**	**Performance Criteria**	**Compensatory Measures**
	Active	**Passive**		**SC**	**SS**	**DID**				
Transfer Error (Pump Tank Overflow) – Tornado/High Winds (3.4.2.17)			Unmitigated[34] MOI ≤ 0.19 rem CW > 100 rem Mitigated MOI = 0 rem CW = 0 rem				No credit is taken for confinement in this scenario[20]			
Transfer Error (Pump Tank Overflow) – Seismic (3.4.2.18)			Unmitigated[34] MOI ≤ 0.19 rem CW > 100 rem Mitigated MOI = 0.07 rem CW = 27.7 rem				No credit is taken for confinement in this scenario [21]			
Transfer Error (Pump Tank Overflow) – Wildland Fire (3.4.2.19)			Unmitigated[34] MOI ≤ 0.19 rem CW > 100 rem Mitigated MOI = 0 rem CW = 0 rem				No credit is taken for confinement in this scenario[22]			
Transfer Error (Core Pipe Failure in a Secondary Containment) (3.4.2.9)		X	Unmitigated[34] MOI ≤ 0.19 rem CW > 100 rem Mitigated MOI = 0.19 rem CW = 0 rem		X		Diversion Box/ Pump Pit structure provides confinement for collocated worker protection[23]	Provide gross airborne confinement capability	Maintain structural integrity during normal operations	None

Confinement Documented Safety Analysis Information[35]										
Tank Farms – Transfer Facilities[1]				**Hazard Category 2**				**Performance Expectations**		
Bounding Accidents	**Type Confinement**		**Doses Bounding unmitigated / mitigated[2, 3]**	**Confinement Classification**			**Safety Function**	**Functional Requirements**	**Performance Criteria**	**Compensatory Measures**
	Active	**Passive**		**SC**	**SS**	**DID**				
Transfer Error (Core Pipe Failure in a Secondary Containment) – Tornado/ High Winds (3.4.2.17)			Unmitigated[34] MOI ≤ 0.19 rem CW > 100 rem Mitigated MOI = 0 rem CW = 0 rem				No credit is taken for confinement in this scenario[20]			
Transfer Error (Core Pipe Failure in a Secondary Containment) – Seismic (3.4.2.18)		X	Unmitigated[34] MOI ≤ 0.19 rem CW > 100 rem Mitigated MOI = 0 rem CW = 0 rem		X		Diversion Box/ Pump Pit structure provides confinement for collocated worker protection[24]	Provide gross airborne confinement capability	Maintain structural integrity during and following a PC-3 seismic event	None
Transfer Error (Core Pipe Failure in a Secondary Containment) – Wildland Fire (3.4.2.19)			Unmitigated[34] MOI ≤ 0.19 rem CW > 100 rem Mitigated MOI = 0 rem CW = 0 rem				No credit is taken for confinement in this scenario[22]			

Confinement Documented Safety Analysis Information[35]										
Tank Farms – Transfer Facilities[1]				**Hazard Category 2**				**Performance Expectations**		
Bounding Accidents	**Type Confinement**		**Doses Bounding unmitigated / mitigated[2, 3]**	**Confinement Classification**			**Safety Function**	**Functional Requirements**	**Performance Criteria**	**Compensatory Measures**
	Active	**Passive**		**SC**	**SS**	**DID**				
Pump Tank Aerosolization Due to Transfer Jet Failure (3.4.2.10)[25]	X		Unmitigated[32] MOI ≤ 9.1 rem CW > 100 rem Mitigated MOI = 0 rem CW = 0 rem		X		Ventilation system provides confinement for public and collocated worker protection[26]	Provide filtered ventilation pathway to mitigate radioactive releases during normal operations	Remain functional during normal operations with a minimum efficiency of 99.5%	None
Pump Pit Sump Aerosolization Due To Steam Jet Failure (3.4.2.10) [27]	X		Unmitigated[32] MOI ≤ 11 rem CW > 100 rem Mitigated MOI = 0 rem CW = 0 rem		X		Ventilation system provides confinement for public and collocated worker protection[28]	Provide filtered ventilation pathway to mitigate radioactive releases during normal operations	Remain functional during normal operations with a minimum efficiency of 99.5%	None
Pump Pit Sump Aerosolization Due To Steam Jet Failure – Seismic (3.4.2.18)		X	Unmitigated[32] MOI > 25 rem CW > 100 rem Mitigated MOI = 0 rem CW = 0 rem		X		Pump Pit structure provides confinement for public and collocated worker protection[29]	Provide gross airborne confinement capability	Maintain structural integrity during and following a PC-3 seismic event	None

Confinement Documented Safety Analysis Information[35]										
Tank Farms – Transfer Facilities[1]				**Hazard Category 2**				**Performance Expectations**		
Bounding Accidents	**Type Confinement**		**Doses Bounding unmitigated / mitigated[2, 3]**	**Confinement Classification**			**Safety Function**	**Functional Requirements**	**Performance Criteria**	**Compensatory Measures**
	Active	**Passive**		**SC**	**SS**	**DID**				
Diversion Box Sump Aerosolization Due To Steam Jet Failure (3.4.2.10) [27, 30]	X		Unmitigated[32] MOI ≤ 15.1 rem CW > 100 rem Mitigated MOI = 0 rem CW = 0 rem		X		Ventilation system provides confinement for public and collocated worker protection[28]	Provide filtered ventilation pathway to mitigate radioactive releases during normal operations	Remain functional during normal operations with a minimum efficiency of 99.5%	None
Diversion Box Sump Aerosolization Due To Steam Jet Failure – Seismic (3.4.2.18)[30]		X	Unmitigated[32] MOI ≤ 52 rem CW > 100 rem Mitigated MOI = 0 rem CW = 0 rem		X		Diversion Box structure provides confinement for public and collocated worker protection[29]	Provide gross airborne confinement capability	Maintain structural integrity during and following a PC-3 seismic event	None
Pulse Tube Agitator (PTA) Aerosolization (3.4.2.10)[25]	X		Unmitigated[32] MOI = 7.6 rem CW > 100 rem Mitigated[37] MOI = 7.6 rem CW = 0 rem		X		Ventilation system provides confinement for collocated worker protection[31]	Provide filtered ventilation pathway to mitigate radioactive releases during normal operations	Remain functional during normal operations with a minimum efficiency of 99.5%	None

Confinement Documented Safety Analysis Information[35]										
Tank Farms – Transfer Facilities[1]				**Hazard Category 2**				**Performance Expectations**		
Bounding Accidents	**Type Confinement**		**Doses Bounding unmitigated / mitigated[2, 3]**	**Confinement Classification**			**Safety Function**	**Functional Requirements**	**Performance Criteria**	**Compensatory Measures**
	Active	**Passive**		**SC**	**SS**	**DID**				
Pump Tank Overheat (3.4.2.13)[25]			Unmitigated[36] MOI < 0.1 rem CW = 47 rem Mitigated MOI < 0.1 rem CW = 47 rem				No credit is taken for confinement in this scenario[4]			

Notes for Transfer Facilities Table 4.3:

1. Includes the following Transfer Facilities: FDB-2 & 4; HDB-2, 6, 7 & 8; FPP-1, 2 & 3; and HPP-2 through 10 (Note that each PP contains a PT with the same number, e.g., HPT-10 is located within HPP-10). All other Transfer Facilities were excluded from further 2004-2 evaluation per Reference 20.
2. MOI – Maximally Exposed Offsite Individual; CW – Collocated Worker (100 meters).
3. An LPF of 1.0 was used in the unmitigated analyses unless otherwise noted. Additionally, all consequence dose and LPF values are taken directly from the DSA unless otherwise noted.
4. No SC/SS controls are required for this event since the Offsite and Onsite EGs are not challenged.
5. This scenario involves a core pipe explosion within a DB or PP (all other locations excluded per Note 1 above). The first level of control (SS) for this event is the Transfer Control Program (SAC) that ensures that transfer lines are flushed after sludge slurry transfers to reduce the residual material left in the line such that the resulting IDP is less than or equal to that of bounding supernate. To provide significant defense in depth (SS) the gross airborne confinement capability of the DB/PP structure is credited as the second level of control.

Notes for Transfer Facilities Table 4.3: (Continued)

6. This scenario involves an explosion within a DB (all other transfer facilities excluded per Note 1 above, except for PPs which are addressed in a separate DSA Accident Analysis – 3.4.2.8) due to the accumulation of flammable vapors resulting in a coincident 15,000 gal spill of waste into the affected facility. The analysis assumes that any installed HEPA filters are ejected from the explosion overpressure transient further contributing to the overall radioactive release and resulting consequences. Therefore, the unmitigated consequences reported for this event include those resulting from the explosion as well as those resulting from the spill and the HEPA failures. The flammable vapor concentration in HDB-7 (non-ESP Sludge Slurry transfers) and in HDB-8 do not reach LFL within the 10 day timeframe assumed in the analysis and do not explode. Thus, no SC/SS controls are required for these facilities. In all other DBs, the first level of control (SS) credited for this event is the integrity of the transfer line core piping located within the DB box to prevent a leak of waste into the facility. To provide significant defense in depth for High Rem transfers (i.e., waste with an inhalation dose potential > 2.0 E+08 rem/gal), additional SS controls are credited. The installed active ventilation system [FDB-2 & 4 and HDB-2, 6 & 7 (during ESP Sludge Slurry Transfers)] is credited as the second level of control to prevent the accumulation of flammable vapors in the event of a leak of waste into the facility. No significant defense in depth controls were judged to be required for Low Rem transfers (i.e., waste with an inhalation dose potential $\leq$ 2.0 E+08 rem/gal) since the consequences present a hazard to the immediate facility worker only (i.e., consequences did not challenge either the Offsite or Onsite EGs).
7. The progression for this event is the same as that described above in Note 6 except that a tornado/high winds event is the initiator. In this event the first level of control (SC) is the Severe Weather Response Program (SAC) which ensures that all waste transfers are shutdown in response to a High Wind Warning or a Tornado Watch/Warning. To provide significant defense in depth (SS) the gross airborne confinement capability of the DB structure is credited as the second level of control.
8. For this scenario, the DB structures are not required to be capable of withstanding a PC-2 high winds event. If the structure fails during such an event, flammable vapors can not accumulate within the structure and an explosion will not occur. If they remain intact, they will provide gross airborne confinement capability in the event that an explosion occurs within the structure.
9. The progression for this event is the same as that described above in Note 6 except that a seismic event is the initiator. In this event the first level of control (SC) is the PC-3 seismically qualified core piping located within the DB to prevent a leak of waste into the facility. To provide significant defense in depth the gross airborne confinement capability of the DB structure is credited as the second level of control (SC PC-3 seismically qualified).
10. The progression for this event is the same as that described above in Note 6 except that a wildland fire event is the initiator. In this event the first level of control (SC) is the Event Response Program (SAC) which ensures that all waste transfers are shutdown prior to a Wildland Fire reaching a DB. To provide significant defense in depth (SS) the gross airborne confinement capability of the DB structure is credited as the second level of control (structures are constructed of non-combustible material – reinforced concrete).
11. The flammable vapor concentration in the PPs do not reach LFL within the 10 day timeframe assumed in the analysis and do not explode. Thus, no SC/SS controls are required for the PPs during normal operations. To provide a conservative treatment of a PP explosion during an NPH event it was assumed that such an event could lead to an explosion even though a timeframe of 10 days would have to be exceeded to reach LFL. As such no analysis was performed to determine the unmitigated consequences of such an event. To preclude any mitigated Offsite consequence concerns, a SC preventor is credited as the first level of control for a Tornado/High Winds, Seismic, or Wildland Fire initiated PP Explosion. To provide significant defense in depth, additional SS levels of control are also credited (See Notes 12 - 14 for details).
12. For these scenarios the first level of control (SC) is the Severe Weather Response Program (SAC) which ensures that all waste transfers are shutdown in response to a High Wind Warning or a Tornado Watch/Warning. To provide significant defense in depth (SS) the gross airborne confinement capability of the PP structure is credited as the second level of control.

Notes for Transfer Facilities Table 4.3: (Continued)

13. For this scenario the first level of control (SC) is the PC-3 seismically qualified core piping and pump tanks located within the PP to prevent a leak of waste into the facility. To provide significant defense in depth the gross airborne confinement capability of the PP structure is credited as the second level of control (SC PC-3 seismically qualified).
14. For these scenarios the first level of control (SC) is the Event Response Program (SAC) which ensures that all waste transfers are shutdown prior to a Wildland Fire reaching a PP. To provide significant defense in depth (SS) the gross airborne confinement capability of the PP structure is credited as the second level of control (structures are constructed of non-combustible material – reinforced concrete). For the non-HDB-8 PTs, the passive vents are also credited as part of the first level of control for a PT explosion event to extend the time to LFL.
15. This scenario involves an explosion within a PT due to the accumulation of flammable vapors resulting in a subsequent 15,000 gal spill of waste into the affected facility. Therefore, the unmitigated consequences reported for this event include those resulting from the explosion as well as those resulting from the spill. For each PT the active installed ventilation system is credited as the first level of control (SS) to provide the minimum required ventilation flow through the PT to prevent the accumulation of a flammable mixture of hydrogen. The following controls were also credited as part of the first level of control:
    a. Passive vents (Non-HDB-8 PTs) to extend time to LFL on loss of ventilation
    b. HDB-8 diesel generator
    c. Equipment to stop transfers on loss of ventilation to minimize dissolved hydrogen release due associated with jetted transfers
    d. Pump Tank Backup Ventilation Systems Program (SAC) is credited for the non-HDB-8 PTs to ensure that backup portable ventilation (with power supply) is installed and functional for pump tanks receiving jetted transfers (compensatory measure to address identified vulnerabilities with non-HDB-8 Pump Tank ventilation systems – single failure vulnerability and lack of SS backup diesel generators)

    To provide significant defense in depth (SS) the gross airborne confinement capability of the PP structure is credited as the second level of control.
16. A jetted supernate transfer is assumed to be in progress when a seismic event occurs. The seismic event renders the non-PC-3 seismically qualified ventilation system inoperable. The dissolved hydrogen release from the incoming jetted transfer and the relatively small PT vapor space results in a very short time to LFL and a subsequent PT explosion. Other PTs that are not part of an ongoing transfer at the time of the seismic event will not have a dissolved hydrogen release concern, but could release hydrogen from trapped gas in the PT sludge heel. Because of the trapped gas release, five additional PTs are conservatively assumed to explode. Thus, the unmitigated and mitigated consequences reflect the cumulative effect of six PT explosions resulting from a seismic event. See Section 3.1.4 of this report for a more detailed discussion.
17. The first level of control (SS) credited for this event includes:
    a. HDB-8 Complex PTs - the HDB-8 active ventilation system (including its associated diesel generator [PC-2 seismically qualified]) to prevent the accumulation of a flammable mixture of hydrogen during a PC-2 seismic event
    b. Non-HDB-8 PTs – passive vents to extend the time to LFL

    To provide significant defense in depth the gross airborne confinement capability of the PP structure is credited as the second level of control (SC PC-3 seismically qualified).

Notes for Transfer Facilities Table 4.3: (Continued)

18. The first level of control (SS) credited for this event is the Event Response Program (SAC) to ensure that PT transfers and agitation is secured following a Loss of Offsite Power. This action minimizes the contribution of hydrogen accumulation due to dissolved hydrogen releases from jetted transfers and due to trapped gas release from sludge heel agitation. To provide significant defense in depth (SS) the second level of control includes:
    a. HDB-8 Complex PTs - the HDB-8 active ventilation system (including its associated diesel generator) to prevent the accumulation of a flammable mixture of hydrogen.
    b. Non-HDB-8 PTs – passive vents to extend the time to LFL (As discussed in Note 15 above, the Pump Tank Backup Ventilation Systems Program (SAC) serves as a compensatory measure to address identified vulnerabilities with the non-HDB-8 PT ventilation systems)

    To provide additional significant defense in depth (SS) the gross airborne confinement capability of the PP structure is credited as the third level of control.
19. The first level of control (SS) credited for this event is the PT, instrumentation to detect an increase in the pump pit sump (conductivity probe & associated control room alarm), and equipment to stop the increase. To provide significant defense in depth (SS) the gross airborne confinement capability of the PP structure is credited as the second level of control for High Rem transfers (defined in Note 6 above). No significant defense in depth controls were judged to be required for Low Rem transfers (defined in Note 6 above) since the consequences present a hazard to the immediate facility worker, but did not challenge either the Offsite or Onsite EGs. To prevent or mitigate Offsite consequence concerns, a SC control is credited for a Tornado/High Winds, Seismic, or Wildland Fire initiated Pump Tank Overflow event. To provide significant defense in depth, an additional SS level of control is also credited (See Notes 20 - 22 for details).
20. For these scenarios the first level of control (SC) is the Severe Weather Response Program (SAC) which ensures that all waste transfers are shutdown in response to a High Wind Warning or a Tornado Watch/Warning. This action eliminates the initiators for a transfer error event.
21. The first level of control (SC) for this event is the Event Response Program (SAC) to ensure that PT transfers are secured following a seismic event. This action eliminates the initiators for a transfer error event.
22. For these scenarios the first level of control (SC) is the Event Response Program (SAC) which ensures that all waste transfers are shutdown prior to a Wildland Fire reaching a PP. This action eliminates the initiators for a transfer error event.
23. This scenario involves a spill of 15,000 gallons of waste into a DB or PP. Some DBs (FDB-2 and HDB-6) have an internal volume less than 15,000 gallons thus, the scenario results in a ground level release. The remaining DBs (FDB-4 and HDB-2, 7 & 8) and all PPs have an internal volume greater than 15,000 gallons and thus, contain the waste such that no ground level release occurs. In each case the first level of control (SS) is the core pipe integrity to prevent a leak of waste into the facility. To provide significant defense in depth for High Rem transfers (defined in Note 6 above), additional SS controls are credited and depend on whether the facility volume is greater than 15,000 gallons. For those facilities with an internal volume greater than 15,000 the gross airborne confinement capability of the DB/PP structure is credited as the second level of control. For those facilities with an internal volume less than or equal to 15,000 gallons the leak detection conductivity probes (and associated control room alarms) and equipment needed to stop waste transfers is credited as the second level of control. No significant defense in depth controls were judged to be required for Low Rem transfers (defined in Note 6 above) since the consequences present a hazard to the immediate facility worker only (i.e., consequences did not challenge either the Offsite or Onsite EGs).
24. The progression for this event is the same as that described above in Note 23 except that a seismic event is the initiator. In this event the first the first level of control (SC) is the PC-3 seismically qualified core piping located within the DB/PP to prevent a leak of waste into the facility. To provide significant defense in depth (SS) the gross airborne confinement capability of the DB/PP structure is credited as the second level of control.

Notes for Transfer Facilities Table 4.3: (Continued)

25. Tornado/high winds, seismic, and wildland fire events are not credible initiators for these aerosolization scenarios.
26. For this scenario the first level of control (SC) includes: (1) the Pump Tank Jet Control Program (SAC) to ensure that PT transfer jets are manually isolated from steam and air while not in use; and (2) the Transfer Control Program (SAC) to ensure independent verification of transfer jet discharge valve position prior to a jetted transfer. The installed PT/PP ventilation system is credited as the second level of control (SS) to provide an active confinement function as a significant defense in depth control.
27. Tornado/high winds and wildland fire events are not credible initiators for these aerosolization scenarios.
28. For these scenarios the first level of control (SC) is the DB/PP box sump jet piping integrity to prevent air/steam leakage into the sump. The installed DB/PT/PP ventilation system is credited as the second level of control (SS) to provide an active confinement function as a significant defense in depth control.
29. For these scenarios the first level of control (SC PC-3 seismically qualified) is the DB/PP sump jet piping to prevent air/steam leakage into the DB/PP sump. To provide significant defense in depth (SS) the gross airborne confinement capability of the DB/PP structure is credited as the second level of control.
30. This table addresses an aerosolization due to transfer jet failure scenario for HDB-6, 7 & 8 only. No other DBs within the scope of this report are either equipped with a transfer jet.
31. This scenario involves aerosolization (either via sparging or aspiration) due to a malfunction of the PTA equipment installed in FPT-1. The first level of control (SS) includes the low PT level interlock (sparging) and the PTA suction side relief valves (aspiration) to eliminate the potential for aerosolization. The installed PP ventilation system is credited as the second level of control (SS) to provide an active confinement function as a significant defense in depth control.
32. For these aerosolization events, an LPF of less than 1.0 was used in the unmitigated analyses. The LPFs used in the analyses accounted for particulate removal via deposition. Deposition is an aerosol removal process that does not depend on any engineered feature other than the physical presence of the structure into which the aerosol is released. The model used in the analyses was taken from Engelman, R. J., “Effectiveness of Sheltering in Buildings and Vehicles for Plutonium,” DE-90-016697 (or DOE/EH-0159T, UC-160), U. S. Department of Energy, Washington, DC, July 30, 1990. The model determines the LPF as a function of the deposition velocity of the aerosol, the air exchange rate of the area into which the aerosol is released, and the volume and surface area of the area into which the aerosol is release. See DSA Section 3.4.1.1.1.and Reference 16 for a more detailed discussion. Using this approach the following LPFs were calculated and used in the unmitigated analysis: Diversion Boxes – LPF ranged from 0.54 to 0.91; Pump Pits – ranged from 0.30 to 0.66; and Pump Tanks = 0.92. (S-CLC-G-00260, Ref. 16). The range in the LPF values for the diversion boxes and pump pits reflect differences in the physical size of the facilities and in ventilation flow rates.
33. The Mitigated Onsite Consequence dose for this event was taken directly from the DSA. All other consequence doses for this event were taken from S-CLC-G-00234 (Ref. 21).
34. The unmitigated offsite consequence dose values for these events were taken from S-CLC-G-00236 (Ref. 19) and are associated with High Rem transfers in HTF. The mitigated offsite consequence dose value for the non-NPH scenario is equal to the unmitigated offsite dose value since no SC controls are specified for this event. All other consequence doses for these events were taken directly from the DSA.

Notes for Transfer Facilities Table 4.3: (Continued)

35. For the purposes of this table the “confinement” information reflects any case in which a confinement function is credited for a DBA regardless of whether that confinement function is passive (e.g., gross airborne confinement capability of a structure is credited) or active (e.g., active ventilation system with HEPA filtration is credited) in nature.
36. For this overheat event, an LPF of less than 1.0 was used in the unmitigated analyses. The LPF used in the analyses accounted for particulate removal via deposition. Deposition is an aerosol removal process that does not depend on any engineered feature other than the physical presence of the structure into which the aerosol is released. The model used in the analyses was taken from Engelman, R. J., “Effectiveness of Sheltering in Buildings and Vehicles for Plutonium,” DE-90-016697 (or DOE/EH-0159T, UC-160), U. S. Department of Energy, Washington, DC, July 30, 1990. The model determines the LPF as a function of the deposition velocity of the aerosol, the air exchange rate of the area into which the aerosol is released, and the volume and surface area of the area into which the aerosol is release. See DSA Section 3.4.1.1.1 for a more detailed discussion. Using this approach an LPF of 0.93 was calculated and used in the unmitigated analysis.
37. The unmitigated Offsite consequence of 7.6 rem for this event was judged not to challenge the 25 rem Offsite EG given the very conservative nature of the analysis.

Attachment 4

Tank Farm DSA Table 4.2-1
Design Requirements for Safety Class Structures, Systems, and Components

Design Requirements for Safety Class Structures, Systems, and Components

DESIGN REQUIREMENTS	REMARKS
1. Design Basis Earthquake (DBE) Resistance	Safety functions must not be compromised by Seismic Events up to and including the DBE for the site. To include seismic II/I considerations. For the purpose of determining design requirement compliance, for SSCs contained in non-qualified control rooms (including associated MCCs), it is assumed that: 1) the control room is intact, and 2) the equipment within is accessible.
2. Design Basis Tornado (DBT) Resistance	Safety functions must not be compromised by the DBT for the site. To include tornado II/I considerations.
3. Probable Maximum Flood (PMF) Resistance	Safety functions must not be compromised by the PMF for the site.
4. Probable Maximum Precipitation (PMP) Resistance	Safety functions must not be compromised by the PMP for the site.
5. Explosion/Fire Resistance	Safety functions must not be compromised by external fires or explosions (including the effects of explosion generated missiles).
6. Single Active Failure Resistance	Applies to active mechanical items. Assured by providing redundancy, independence, separation, and/or diversity.
7. Equipment Environment Consideration	SC items must be qualified to function under the most limiting accident conditions of interest at end of life.
8. SC Electrical Requirements	Applies to the design of SC electrical systems and components.
9. ASME Sect. III or Other Applicable Requirements	Applies to the design of SC piping, pumps, and pressure vessels.
10. QA Requirements	Additional QA requirements are applied to SC items to ensure that they will perform as designed.
11. Internal Hazard Resistance	Safety functions must not be compromised by internal hazards including missiles, fires, explosions, smoke, fire suppression agents, flooding, and damage caused by non-SC items and other external impacts.
12. Maintenance Requirements	SC items shall be designed to allow inspection, maintenance, and testing to ensure their continued functioning, readiness for operation, and accuracy.
13. Test Requirements	SC items shall be designed to include appropriate provisions for periodic testing. This testing must be capable of being performed in-place and on a regular schedule.
14. Functionality	SC items must be capable of performing the required safety function.

Attachment 5

Tank Farm DSA Table 4.2-2
Design Requirements for Safety Significant Structures, Systems, and Components

Design Requirements for Safety Significant Structures, Systems, and Components

DESIGN REQUIREMENTS	REMARKS
1. NPH Resistance	Safety functions must not be compromised by NPH seismic, high wind, and flooding events. For the purpose of determining design requirement compliance with respect to NPH seismic, for SSCs contained in non-qualified control rooms (including associated MCCs), it is assumed that: 1) the control room is intact, and 2) the equipment within is accessible.
2. Equipment Environment Consideration	SS items must be designed to withstand the effects of, and be compatible with, the environmental conditions associated with operation, maintenance, shutdown, testing, and accidents.
3. Functionality	Functionality requirements are based on reliability of the SSC to perform its function and QA controls.
4. Test Requirements	SS items shall be designed to include appropriate provisions for periodic testing. This testing must be capable of being performed in-place and on a regular schedule.
5. Maintenance Requirements	SS items shall be designed to allow inspection, maintenance, and testing to ensure their continued functioning, readiness for operation, and accuracy.

Attachment 6

Comparison of DNFSB 2004-2 Table 5.1 Performance Criteria and Tank Farm Backfit Analysis Design/TSR Requirements

2004-2 Table 5.1 Evaluation Criteria	Addressed by Tank Farm Backfit Analysis Design Requirements/TSRs?	Comments
Ventilation System – General Criteria		
Pressure differential should be maintained between zones and atmosphere.	Yes – Addressed under "Functionality" requirement	Criteria have limited applicability. The primary waste tank and DB ventilation systems are single zone systems that maintained the vapor space pressure negative relative to the atmosphere. The waste tank annulus ventilation systems are also single zone systems, however no credit is taken for the installed systems to serve an active confinement safety function for any DBA. The PP ventilation systems each have two basic zones, the PPs and the PTs. Ventilation flow is from the PPs through the PTs.
Materials of construction should be appropriate for normal, abnormal, and accident conditions.	Yes – Addressed under "Equipment Environmental Consideration" requirement	None
Exhaust system should withstand anticipated normal, abnormal, and accident systems conditions and maintain confinement integrity.	Yes – Addressed under "Equipment Environmental Consideration" requirement	None
Confinement ventilation systems shall have appropriate filtration to minimize release.	Yes – Addressed under "Functionality" requirement	No credit is taken for the installed waste tank annulus systems to serve an active confinement safety function for any DBA.
Ventilation System – Instrumentation and Control		
Provide system status instrumentation and/or alarms.	Yes – Addressed under "Functionality" and "Test" requirements	None
Interlock supply and exhaust fans to prevent positive pressure differential.	Yes – Addressed under "Functionality" requirement	Not applicable to any primary/annulus waste tank or Transfer Facility ventilation system. None of these systems employ both supply and exhaust fans.

2004-2 Table 5.1 Evaluation Criteria	Addressed by Tank Farm Backfit Analysis Design Requirements/TSRs?	Comments
Post-accident indication of filter break-through.	No	No credit is taken in any DBA for post-accident filter break-through indication. However, in compliance with applicable Tank Farm permit requirements, filter break-through indication is provided during normal operations by either an installed air sampler or a Continuous Air Monitoring system for each ventilation discharge point.
Reliability of control system to maintain confinement function under normal, abnormal, and accident conditions.	Yes – Addressed under "Equipment Environmental" requirement. Also addressed by "SC Electrical" requirement for SC control systems	None
Control components shall be fail-safe.	Yes – Addressed under "Functionality" requirement and "Single Active Failure Resistance" and "SC Electrical" requirements for SC control systems	None
Resistance to Internal Events - Fire		
Confinement ventilation systems should withstand credible fire events and be available to operate and maintain confinement.	Yes – Addressed by "Functionality" requirement and by "Explosion/Fire Resistance" and "Internal Hazard Resistance" requirements for SC systems	Fires are not credible within the primary or annulus waste tank structures due to the lack of combustible material. Additionally, as stated in Table 3.3-11 of the DSA, the waste material itself is not combustible. Fires within Transfer Facilities are evaluated as a DBA in Section 3.4.2.5 of the DSA however; the consequences do not challenge either the Offsite or Onsite EGs so that no SC/SS controls are required. Therefore there is no DSA requirement for a ventilation system to withstand the effects of an internal fire.
Confinement ventilation systems should not propagate spread of fire.	Yes – Addressed by "Functionality" requirement and by "Explosion/Fire Resistance" and "Internal Hazard Resistance" requirements for SC systems	Fires are not credible within the primary or annulus waste tank structures due to the lack of combustible material. Additionally, as stated in Table 3.3-11 of the DSA, the waste material itself is not combustible. Although fires are credible within Transfer Facilities (DSA Section 3.4.2.5), the design of the structures with a DB/PP complexes are such that a fire in one cell can spread into another cell due to openings between the cells regardless of ventilation system operation.

2004-2 Table 5.1 Evaluation Criteria	Addressed by Tank Farm Backfit Analysis Design Requirements/TSRs?	Comments
Resistance to External Events – Natural Phenomena - Seismic		
Confinement ventilation systems should safely withstand earthquakes.	Yes – Addressed by "Design Basis Earthquake Resistance" requirement for SC SSCs and by "NPH Resistance" requirement for SS SSCs	The only installed ventilation system within the scope of this report that is credited with remaining functional during and following a seismic event is the HDB-8 PVV system.
Resistance to External Events – Natural Phenomena – Tornado/Wind		
Confinement ventilation system should safely withstand tornado depressurization.	Yes – Addressed by Yes – Addressed by "Design Basis Tornado Resistance" requirement for SC SSCs and by "NPH Resistance" requirement for SS SSCs	No installed ventilation system within the scope of this report is credited with remaining functional during or following a tornado event.
Confinement ventilation system should withstand design wind effects on system performance.	Yes – Addressed by "Design Basis Tornado Resistance" requirement for SC SSCs and by "NPH Resistance" requirement for SS SSCs	No installed ventilation system within the scope of this report is credited with remaining functional during or following a high winds event.
Other NPH Events (e.g., flooding, precipitation)		
Confinement ventilation system should withstand other NPH events considered credible in the DSA where the confinement ventilation system is credited.	Yes – Addressed by "Probable Maximum Flood Resistance" and "Probable Maximum Precipitation Resistance" requirements for SC SSCs and the "NPH Resistance" requirement for SS SSCs	Flooding is not a credible hazard event for the Tank Farm facilities.

2004-2 Table 5.1 Evaluation Criteria	Addressed by Tank Farm Backfit Analysis Design Requirements/TSRs?	Comments
Range Fires/Dust Storms		
Administrative controls should be established to protect confinement ventilation systems from barrier threatening events.	Yes – Addressed by "Functionality" requirement and by "Explosion/Fire Resistance" requirement for SC SSCs	The Wildland Fire DBA evaluated in Section 3.4.2.19 of the DSA recognizes that such an external fire event may render the installed ventilation systems inoperable. Event Response (SAC) is credited with placing the facility in a stable and safe shutdown condition upon notification of a wildland fire event at the SRS.
Testability		
Design supports the periodic inspection & testing of filters and housing, and tests and inspections are conducted periodically.	Design Criteria – Yes – Addressed by "Test" requirement Operational Criteria – Yes – Addressed by TSR Surveillance Requirements and Administrative Controls (Structural Integrity Program and HEPA Filter Program)	None
Instrumentation required to support system operability is calibrated.	Design Criteria – Yes – Addressed by "Test" requirement Operational Criteria – Yes-Addressed by TSR Surveillance Requirements and Administrative Controls (Installed Process Instrumentation, Measuring and Test Equipment, and Other TSR Measuring Devices Program and Preventive Maintenance Program)	None
Integrated system performance testing is specified and performed.	Design Criteria – Yes – Addressed by "Test" requirement Operational Criteria – Yes-Addressed by TSR Surveillance Requirements for Waste Tanks and Transfer Facility systems.	None

2004-2 Table 5.1 Evaluation Criteria	Addressed by Tank Farm Backfit Analysis Design Requirements/TSRs?	Comments
Maintenance		
Filter service life program should be established.	Design Criteria – Yes – Addressed by "Maintenance" requirement Operational Criteria – Yes – Addressed by TSR Surveillance Requirements and Administrative Controls	The HEPA filter service life program for the Tank Farm conforms to the SRS program governed by ENG-STD-15888 (Ref. 14). This program is implemented via a combination of TSR Surveillance Requirements and the Preventative Maintenance Program. The filter service life program ensures that filters are tested prior to installation and periodically during service. Additionally this program ensures that the filters are periodically replaced on a specified schedule.
Single Failure		
Failure of one component (equipment or control) shall not affect continuous operation. (SC only)	Yes – Addressed by "Single Active Resistance" requirement	None
Automatic backup electrical power shall be provided to all critical instruments and equipment required to operate and monitor the confinement ventilation system. (SC only)	Yes – Addressed by "Single Active Resistance" and "SC Electrical" requirements	The only SC ventilation systems under the scope of this report are the Type I, II, III/IIIA primary waste tank ventilation systems (excluding Tanks 48 & 50). The SC function is for preventing the accumulation of flammable vapors during normal operation. These systems serve no credited SC confinement function therefore; this criterion does not apply to any Tank Farm ventilation system.
Backup electrical power shall be provided to all critical instruments and equipment required to operate and monitor the confinement ventilation system. (SS only)	Yes – Addressed by "Functionality" requirement	The only SS ventilation system for which a Diesel Generator is credited to provide a backup power supply is the HDB-8 PVV system. This backup power function is credited for preventing the accumulation of flammable vapors within the associated PTs during normal operations and during/following a seismic or loss of power event. No other installed SS ventilation system is credited with performing an active confinement function during a loss of power event.
Other Credited Functional Requirements		
Address any specific functional requirements for the confinement ventilation system (beyond the scope of those above) credited in the DSA.	Yes – Addressed by "Functionality" requirement	None

Attachment 7

Applicable Excerpts from Tank Farm DSA Table 3.3-16
Planned Equipment Upgrades

Applicable Excerpts from Tank Farm DSA Table 3.3-16
Planned Equipment Upgrades

Proposed Improvement Description	Functional Classification	DBA DSA Section(s)	Currently Credited Control(s)	DSA Section(s) Addressing Vulnerability of Existing Control(s)	Justification for Proposed Improvements
Pump Tank Ventilation with flow interlocks supplied by Diesel Generator power to prevent Pump Tank Explosions	SS	3.4.2.8	Pump Tank Ventilation System and supporting Diesel Generator	4.4.9 4.4.10 4.4.11	2, 3, 4
Passive ventilation for Pump tanks, pump pits, DBs to prevent explosions from leaked material into the boxes. Passive ventilation should be sized to address dissolved and trapped gas release and radiolytically generated hydrogen	SS	3.4.2.7 3.4.2.8	Active pump tank/PP ventilation system	4.4.9 4.4.10	2, 3, 4, 5
Waste tank ventilation upgrades including flow instrumentation and interlocks, seismic qualification, and backup power, for Waste Tanks which become flammable in 7 days following a seismic event	SC	3.4.2.11	Waste tank ventilation system	4.3.12	2, 3, 4, 5, 6

DSA Table 3.3-16 BENEFIT NOTES:

1. Not used for the purposes of this report

2. Eliminates operator intense controls

3. Brings controls in compliance with DOE Order 420.1 design requirements

4. Overcomes major equipment vulnerabilities

5. Brings control scheme for affected scenarios in compliance with DOE-STD-3009-94 control selection hierarchy (preventor over mitigator, passive over active, SSC over administrative control, etc.)

6. Reduces time at risk

Attachment 8

Tank Farm DSA Table 4.3-2 – Safety Class Evaluations
Type I, II, III/IIIA Primary Waste Tank Ventilation Systems (Excluding Tank 50)

Design Criteria Assessment Matrix 4.3.12 Type I, II, III, IIIA Waste Tank Ventilation System (Excluding Tank 50)		
Design Requirements	**Requirement Met**	**Basis/References**
1. DBE Resistance	NA	Waste Tank Ventilation Systems are not credited during a DBE.
2. DBT Resistance	NA	Waste Tank Ventilation Systems are not credited during a DBT.
3. PMF Resistance	NA	Waste Tank Ventilation Systems are not credited during a PMF.
4. PMP Resistance	NA	Waste Tank Ventilation Systems are not credited during a PMP.
5. Explosion/Fire Resistance	Yes	Waste Tank Ventilation Systems are susceptible to failure as a result of an explosion or fire event. Based on the compensatory actions given in Section 4.3.12.3, this DR has been accepted.
6. Single Active Failure Resistance	Yes	Waste Tank Ventilation Systems are susceptible to failure as a result of loss of power or component failure. Based on the compensatory actions given in Section 4.3.12.3, this DR has been accepted.
7. Equipment Environment Consideration	Yes	Waste Tank Ventilation Systems operate reliably in the environment to which they were designed.
8. SC Electrical Requirements	Yes	Waste Tank Ventilation Systems were not designed or installed to 1E requirements. Based on the compensatory actions given in Section 4.3.12.3, this DR has been accepted.
9. ASME Sect. III or Other Applicable Requirements	Yes	Waste Tank Ventilation Systems were designed and constructed to DuPont or SRS Standards which have been determined to be consistent with applicable national consensus codes at the time of construction.
10. QA Requirements	Yes	Waste Tank Ventilation Systems met the DuPont standards of the time. Current QA requirements are met based on the compensatory actions given in Section 4.3.
11. Internal Hazard Resistance	Yes	Waste Tank Ventilation Systems are susceptible to failure as a result of internal hazards. Based on the compensatory actions given in Section 4.3.12.3, this DR has been satisfied.
12. Maintenance Requirements	Yes	Waste Tank Ventilation Systems are capable of being maintained.
13. Test Requirements	Yes	Waste Tank Ventilation Systems are capable of being tested.
14. Functionality	Yes	Waste Tank Ventilation Systems operate as required by the conditions given in Chapter 3.

Attachment 9

Tank Farm DSA Table 4.4-2 – Safety Significant Evaluations
Diversion Box/Pump Pit Ventilation Systems & Tank 50/Type IV Primary Waste Tank Ventilation Systems

Design Criteria Assessment Matrix 4.4.5 Diversion Box Ventilation Systems (HDB-6 and 7)		
Design Requirements	**Requirement Met**	**Basis/References**
1. NPH Resistance	NA	The DB Ventilation Systems are not credited for NPH events.
2. Equipment Environment Consideration	Yes	The environmental conditions the DB Ventilation Systems are exposed to during service will not impact the equipment's ability to perform its intended safety function.
3. Functionality	Yes	The DB Ventilation Systems meet the SS QA requirements, however there are vulnerabilities associated with the system. Based on the compensatory actions given in Section 4.4.5.3, this DR has been satisfied.
4. Test Requirements	Yes	The DB Ventilation Systems are capable of being tested.
5. Maintenance Requirements	Yes	The DB Ventilation Systems are capable of being maintained.

Design Criteria Assessment Matrix 4.4.9 Pump Pit Ventilation Systems with Passive Vents		
Design Requirements	**Requirement Met**	**Basis/References**
1. NPH Resistance	Yes	The Passive Vents were evaluated to meet current SS seismic and high winds requirement. The remaining portions of the Pump Pit ventilation systems are not credited for NPH events.
2. Equipment Environment Consideration	Yes	The Pump Pit Ventilation Systems located under rain covers or located inside and instrumentation is hermetically sealed.
3. Functionality	Yes	The Pump Pit Ventilation Systems do meet SS QA requirements, however there are vulnerabilities associated with the system. Based on the compensatory actions given in Section 4.4.9.3, this DR has been satisfied.
4. Test Requirements	Yes	The Pump Pit Ventilation Systems are capable of being tested.
5. Maintenance Requirements	Yes	The Pump Pit Ventilation Systems are capable of being maintained.

Design Criteria Assessment Matrix 4.4.10 HDB-8 Process Vessel Ventilation System		
Design Requirements	**Requirement Met**	**Basis/References**
1. NPH Resistance	Yes	The HDB-8 PVV System was evaluated to meet current SS seismic requirements. It is not credited for other NPH events.
2. Equipment Environment Consideration	Yes	The HDB-8 PVV System is located inside a building enclosure.
3. Functionality	Yes	The HDB-8 PVV System does not meet the reliability and SS QA requirements. Based on the compensatory actions given in Section 4.4.10.3, this DR has been satisfied.
4. Test Requirements	Yes	The HDB-8 PVV System is capable of being tested.
5. Maintenance Requirements	Yes	The HDB-8 PVV System is capable of being maintained.

Design Criteria Assessment Matrix 4.4.25 Tank 50 and Type IV Waste Tank Ventilation Systems		
Design Requirements	**Requirement Met**	**Basis/References**
1. NPH Resistance	NA	Tank 50 and Type IV Waste Tank Ventilation Systems are not credited for NPH events.
2. Equipment Environment Consideration	Yes	Tank 50 and Type IV Waste Tank Ventilation Systems operate reliably in the environment for which they were designed.
3. Functionality	Yes	Tank 50 and Type IV Waste Tank Ventilation Systems are susceptible to failure because of a loss of power, external fire/explosion, and internal fire/explosion hazards. Based on the compensatory actions given in Section 4.4.25.3, this DR has been satisfied.
4. Test Requirements	Yes	Tank 50 and Type IV Waste Tank Ventilation Systems are capable of being tested.
5. Maintenance Requirements	Yes	Tank 50 and Type IV Waste Tank Ventilation Systems are capable of being maintained.