SRNL
SAVANNAH RIVER NATIONAL LABORATORY

OCT 2 3 2007

SRNL-DIR-2007-00108

Mr. Carl A. Everatt, Director
Office of Safety and Quality Assurance
U. S. Department of Energy
Savannah River Operations Office
P.O. Box A
Aiken, South Carolina 29802

Dear Mr. Everatt:

SAVANNAH RIVER NATIONAL LABORATORY BUILDING 773-A DNFSB 2004-2 ACTIVE CONFINEMENT EVALUATION (FINAL REPORT)

This letter transmits the final report of DNFSB Recommendation 2004-2, Active Confinement Systems for the Savannah River National Laboratory 773-A Facility located at the Savannah River Site. This report is submitted for Site Evaluation Team and Independent Review Panel review and concurrence. The attached report has been generated in accordance with the guidance provided in "Ventilation System Evaluation Guidance for Safety-Related and Non-Safety-Related Systems", Revision 0, January 2006. The Facility Evaluation Team has concurred with the information contained in this transmittal.

If you have any questions or need additional information, please contact Freddie Grimm at 725-5237.

Sincerely,

Cheryl C. Cabbil

Cheryl C. Cabbil
Acting Laboratory Director

ds:ccc
Atts.
c: Mark A. Smith, 730-B, 2431
Donald J. Blake, 707-H, 33
John A. Smartt, 703-H, 133
Jerry L. Hansen, 707-F, 39
Michael J. Swain, 773-43A, 202A
Frederick M. Grimm, 773-43A, 221C
J. Scott MacMurray, 773-43A, 148
Kenneth W. Stephens, 730-4B, 313
Andrew M.Vincent, III, 703-H, 17

OCT 2 3 2007

Facility Evaluation Team Concurrence:

10/23/07

John A. Smartt Date
DOE Safety System Oversight

10/23/07

J. Scott MacMurray Date
WSRC SRNL FET Lead

SRNL Chief Engineer Concurrence:

10/23/07

Frederick M. Grimm Date
SRNL Chief Engineer

:

SRNL-DIR-2007-00108
Revision 0

SAVANNAH RIVER NATIONAL LABORATORY

BUILDING 773-A

DNFSB 2004-2 ACTIVE CONFINEMENT EVALUATION

FINAL REPORT

Revision 0
October, 2007

UNCLASSIFIED
DOES NOT CONTAIN
UNCLASSIFIED CONTROLLED
NUCLEAR INFORMATION
ADC & Reviewing Official C.A. BAPTISTE DESIGN AUTHORITY ENGINEER
(Name and Title)
Date: 10/23/07 (SR-IC-50)

Washington Savannah River Company
Savannah River Site
Aiken, SC 29808

Prepared for the U.S. Department of Energy Under Contract Number DEAC09-96-SR18500

SRNL
SAVANNAH RIVER NATIONAL LABORATORY

Table of Contents

TERMS and DEFINITIONS 2
ACRONYMS 3
ACRONYMS 4
EXECUTIVE SUMMARY 5
1.0 Introduction 8
1.1 Facility Overview 8
1.2 Confinement Ventilation Systems and Strategy 9
1.3 Major Modifications 12
2.0 Functional Classification Assessment 13
2.1 Existing Classification 13
2.2 Evaluation 13
2.3 Summary 13
3.0 System Evaluation 14
3.1 GAP Identification 15
3.2 GAP Evaluations 19
3.3 Modifications and Upgrades 23
4.0 Conclusion 25
5.0 References 27
Attachment 1 - List of Figures A1-1
Attachment 2 - Table 4-3 Attachment 1 from SRNL-ROE-2007-00063 A2-1
Attachment 3 - Radiological Dose Criteria from Consolidate Hazards Analysis Manual (Ref. D) A3-1
Attachment 4 - Table 1 - Events Excluded from Evaluation as Part of Table 5-1 A4-1
Attachment 5 - Justification for Sections and Systems Excluded by 4-3 Report A5-1
Attachment 6 - Description of Discretionary Gaps Identified in Table 5-1 Evaluation A6-1
Attachment 7 - 2004-2 Table 5-1 Ventilation System Performance Evaluation A7-1
Attachment 8 - Scope, Estimate and Recommendation for Gap Closure A8-1
Attachment 9 - Cross-Walk of Gaps Recommended for Closure that would Reduce the Probabilty and/or Consequences of Events Evaluated A9-1
Attachment 10 - FET Composition & Biographical Sketches A10-1

TERMS and DEFINITIONS

Active Confinement Ventilation System	A ventilation system that uses mechanical means (e.g., blower) to circulate air within, and remove air from a building or building space through filtration. (DOE-HDBK-1169-2003, DOE Nuclear Air Cleaning Handbook)
Confinement	A building, building space, room, cell, glovebox, or other enclosed volume in which air supply and exhaust are controlled, and typically filtered. (DOE-HDBK-1169-2003, DOE Nuclear Air Cleaning Handbook)
Confinement System	The barrier and its associated systems (including ventilation) between areas containing hazardous materials and the environment or other areas in the facility that are normally expected to have levels of hazardous material lower than allowable concentration limits. (DOE-HDBK-1169-2003, DOE Nuclear Air Cleaning Handbook)
Discretionary Gap	A condition where a specific system feature does not meet the DNFSB 2004-2 Evaluation Guidance expectation but does meet the expectations assumed in the DSA.
Estimate Class	The level of project definition and associated accuracy range for an estimate. Estimate range from Class 5 with 2% project definition and an accuracy range of -30% to +50% to Class 1 estimates with 100% project definition and an accuracy range of -10% to +10%. (AACE.05)
Hazard Category	Designation for facilities after they are categorized by hazard inventory to determine safety document requirements.
Mitigative Function	A feature associated with a system, structure, or component (SSC) or an administrative control (AC) which reduces the negative consequences of an adverse event to ensure adequate protection of workers, the public, and the environment.
Performance Category	A classification based on a graded approach used to establish the NPH design and evaluation requirements for structures, systems and components. (DOE-STD-1021-93, Natural Phenomena Hazards Performance Categorization Guidelines for Structures, Systems and Components)
Preventive Function	A feature associated with a system, structure, or component (SSC) or an administrative control (AC) which reduces the probability of occurrence of an adverse event to ensure adequate protection of workers, the public, and the environment.
Tape-in-place HEPA Filters	HEPA filters that are installed between two ducts that once taped in place, serve as the contaminated ductwork system pressure boundary without an outer protective housing.
Ventilation System	The ventilation system includes the structures, systems, and components required to supply air to, circulate air within, and remove air from a building/facility space by natural or mechanical means. (DOE-HDBK-1169-2003, DOE Nuclear Air Cleaning Handbook).

ACRONYMS

AM	Air Monitoring
ARP	Actinide Removal Project
CA	Contamination Area
CAM	Continuous Air Monitor
CE	Cell Exhaust
CFM	Cubic Feet per Minute
CHEX	Central Hood Exhaust
CPF	Californium Processing Facility
CVS	Confinement Ventilation System
CW	Co-located Worker (100 meters)
D&D	Deactivation & Decommissioning
DF	Decontamination Factor
D/G	Diesel Generator
DNFSB	Defense Nuclear Facilities Safety Board
DOE	Department of Energy
DOE-SR	Department of Energy Savannah River
DSA	Documented Safety Analysis
ΔP	Differential Pressure
EC	Evaluation Criteria
EG	Evaluation Guideline
FET	Facility Evaluation Team
FHSF	Sand Filter Exhaust
HA	Hazard Analysis
HAD	High Activity Drain Exhaust
HC	Hazards Category
HEPA	High Efficiency Particulate Air
HLC	High Level Cell
HV	Heating and Ventilating
HVAC	Heating Ventilation & Air Conditioning (supply system)
ILC	Intermediate Level Cell
I/O	Input/Output
IRP	Independent Review Panel
KAPL	Knolls Atomic Power Laboratory
LAD	Low Activity Drain Exhaust
LHEX	Local Hood Exhaust
MAR	Material at Risk
MCC	Motor Control Center
MREM	Milliroentgen Equivalent Man
MOI	Maximally Exposed Offsite Individual
MSF	Medical Source Facility
NPH	Natural Phenomena Hazard
OGE	Off-Gas Exhaust
OPC	Other Project Costs
OPEX	Operating Expense

ACRONYMS

PC	Performance Category
PHEX	Process Hood Exhaust
RBA	Radiological Buffer Area
REM	Roentgen Equivalent Man
R&D	Research and Development
ROM	Rough Order of Magnitude
RREX	Regulated Room Exhaust
SAAM	Stack Air Activity Monitoring
SC	Safety Class
SED	Separations Equipment Development
SET	Site Evaluation Team
SRNL	Savannah River National Laboratory
SRS	Savannah River Site
SS	Safety Significant
SSC	Structures, Systems and Components
SST	Stainless Steel
TEC	Total Estimated Cost
TPC	Total Project Cost
TSR	Technical Safety Requirements
VAC	Building Central Vacuum
VOC	Volatile Organic Compound
WG	Water Gauge
WSRC	Washington Savannah River Company

EXECUTIVE SUMMARY

Savannah River National Laboratory (SRNL), Department of Energy (DOE) Environmental Management's Corporate Laboratory, provides R&D, analytical, process support and enabling technologies in support of DOE Environmental Management (waste operations, environmental restoration, decontamination and decommissioning, site cleanup and closure), National Nuclear Security Administration (tritium, plutonium disposition, and homeland security), DOE Energy Production and Conservation (hydrogen economy), and other government agencies and commercial customers. SRNL receives and uses limited quantities of radiological and hazardous chemicals as described in the Documented Safety Analysis (DSA) and supporting program documentation in order to provide the requisite services.

This report presents the results of an analysis of the Savannah River National Laboratory Building 773-A active confinement ventilation systems performed by the Facility Evaluation Team (FET). The FET performed this evaluation to satisfy commitments made in response to Defense Nuclear Facilities Safety Board (DNFSB) recommendation 2004-2 in accordance with the guidance provided by DOE.

Based on the Table 4-3 Evaluation Criteria, the FET identified six events that exceeded the 1 rem criteria for the Maximally Exposed Offsite Individual (MOI). No events were identified that exceed the 100 rem criteria for the Co-located Worker (CW). Subsequent application of Table 5-1 screening criteria along with DOE guidance to exclude Natural Phenomena Hazard (NPH) and full facility fire events resulted in the elimination of all but one event (glovebox overpressurization). However, to develop a more complete understanding of the hazards that can be mitigated by an active confinement ventilation system as part of the assessment, the FET elected to include four additional process events in the Table 5-1 Evaluation process.

Using the Safety Class (SC) performance criteria per the DOE evaluation guidance, the FET performed a functional review of 15 active ventilation systems (773-A B/C-CHEX, B/C-PHEX, B/C-HVAC, B/C-RREX, B/C-HV, B/C/F-OGE, E-CE, E-HVAC, E-RREX, E-LHEX, E-HV, F-PHEX, F-HVAC, F-LHEX, and FHSF) serving four of six sections of Building 773-A.

The Table 5-1 evaluation resulted in the identification of 58 gaps for further evaluation. All gaps were determined to be discretionary since they did not constitute a discrepancy between the DSA and field conditions. Scopes and estimates were developed for the closure of the identified gaps. For some gaps, several alternatives were considered for closing the gap. The FET determined that closure of all 58 gaps would require funding in the range of $37M to $107M over a period of 6 to 10 years depending upon gap closure methods selected.

Based on the number and significance of the gaps as well as the estimated cost to close all the gaps, the FET recommends closing 24 of 58 gaps. The gaps recommended for closure could be closed at an estimated cost ranging between $23M to $33M (in FY07 dollars) over a period of 4 to 6 years, contingent upon funding. Closure of the these gaps will provide a discernable improvement in the reliability and effectiveness of the existing integrated active confinement ventilation system for protection of the facility worker and provide a system that could be

credited in the future for protection of the co-located worker. This in turn would provide enhanced protection of the public.

- Based on the original Recommendation 2004-2 report, closure of Gaps 3, 4, and 6 in the near term would provide a Safety Significant primary confinement ventilation system for 773-A Sections B and C. These two sections of the building are the most likely location for a process event with an MOI potential dose greater than 1 rem. The cost range in FY07 dollars to close these three gaps is between $14M and $21M. The schedule duration, if funded as a single project, is between 36 and 42 months. If funded as currently forecast in the SRNL Infrastructure Plan, the work would be completed no sooner than 2017.

- Based on the feedback from the Independent Review Panel (IRP) and DNFSB during the Actinide Removal Project (ARP) Pilot, the following 7 gaps should be closed in the near term at the Functional Classification level of Safety Significant. Closure of these gaps will result in incremental improvements to the performance of the confinement ventilation systems in 773-A Section E:

  - Closure of Gaps 35, 36, 37, 38, 40 and 42 will increase the performance and reliability of the Secondary Confinement Zone Ventilation Systems that support loading and unloading the shielded cells. The cost range in FY07 dollars to close these gaps is between $2.0M and $2.3M. The schedule duration is between 18 and 24 months. Design for this project is already complete and engineered material has been purchased. Funding is needed to complete the construction and start-up phase.

  - Closure of Gap 58 will increase the reliability of the Primary Confinement Zone Ventilation System in Section E for the shielded cells. The cost range in FY07 dollars to close this gap is between $390K and $500K. The schedule duration is between 12 and 18 months. Design for this project is already complete.

- Based on the enduring mission of SRNL in Building 773-A, the following 14 gaps should be closed over the long term at the Functional Classification level of Safety Significant. Closure of these gaps will provide incremental improvements to the performance of the confinement ventilation systems in 773-A:

  - For events with a potential dose to the MOI greater than or equal to 1 rem, the FET recommends closing Gaps 15, 20, 21, 22, 53, 55 and 56 associated with the primary confinement systems in 773-A Sections B, C and F. The cost range in FY07 dollars to close these gaps is $4.6M to $6.5M.

  - For events with a potential dose to the MOI of less than 1 rem, the FET recommends closing Gaps 23, 24, 26, 27 and 39 associated with the primary and secondary confinement systems in 773-A Section E and Gaps 1 and 5 associated with the 773-A Section B/C CHEX. The cost range in FY07 dollars to close these gaps is $2.0M to $3.0M.

Do not close the remaining 34 gaps for one of the following reasons: 1) D&D planning has been initiated for the process or 2) the incremental dose mitigated by closing the gap is insignificant when compared to the cost to close the gap.

1.0 Introduction

1.1 Facility Overview

SRNL Overview

Savannah River National Laboratory (SRNL), Department of Energy (DOE) Environmental Management's Corporate Laboratory, provides R&D, analytical, process support and enabling technologies in support of DOE Environmental Management (waste operations, environmental restoration, decontamination and decommissioning, site cleanup and closure), National Nuclear Security Administration (tritium, plutonium disposition, and homeland security), DOE Energy Production and Conservation (hydrogen economy), and other government agencies and commercial customers. SRNL receives and uses limited quantities of radiological and hazardous chemicals as described in the Documented Safety Analysis (DSA) and supporting program documentation in order to provide the requisite services.

Building 773-A Overview

Building 773-A (Attachment 1 Figure A), the main laboratory of the SRNL, is a nominal 250,000 square foot Hazard Category (HC) 2 Nuclear facility. It is divided into six sections or wings (Sections A through F) as shown in Attachment 1 Figure B. Each section has a minimum of two levels - the main floor and the service floor.

- Section A is an administrative portion of the facility and has no radionuclide or chemical inventory with the exception of exempt sealed sources (used by the Radiological Protection Department to source test equipment). This section has a third floor consisting of office space. Section A was constructed in the early 1950s. Section A is qualified as PC-1.

- Sections B and C consist of radiochemical laboratories and office space on the main floor and radiochemical labs, two Intermediate Level Cells (ILC), administrative spaces, and mechanical and electrical support equipment on the service floor. A sub-basement in each Service Floor contains the majority of the confinement ventilation system exhaust fans. Each section is provided with a dedicated ventilation exhaust stack. Sections B and C contain HC-2 quantities of radionuclides. Sections B and C were constructed in the early 1950s. The building roof, main floor, framing and stack are qualified as PC-3. The balance of the Structures, Systems and Components (SSCs) are qualified as PC-1.

- Section D consists of offices, maintenance shops, chemical and laboratory supply and storage areas, robotics laboratory, glass shop and high bay experimental area. The high bay experimental area still has several pieces of equipment used to develop and test SRS production reactor fuel and target assemblies. A legacy inventory of natural, depleted and enriched uranium is located in the high bay. The sum of fractions for this nuclear material is less than HC-3 quantity. Section D was constructed in the early 1950s with a major addition in the late 1950s. The SSCs are qualified as PC-1.

- Section E contains two High Level Cell (HLC) Blocks A and B as well as the associated support areas (truck bay, high bay, office space, storage space, and shop space) necessary to support operations of the cells. The 16 cells that make up A and B Cell Blocks provide the shielding and confinement necessary for the remote examination, analysis, and testing of highly radioactive materials from onsite and offsite activities. Section E contains HC-2 quantities of radionuclides. Initial construction of Section E was in the early 1950s with major additions in the late 1950s and early 1960s. A major refurbishment of the cells and cell primary confinement ventilation system was completed in the early 1970s. The shielded cells are qualified as PC-3. The balance of the SSCs are qualified as PC-1.

- Section F contains operating laboratories, shielded cell facilities, several "retired" process areas waiting D&D and a high bay experimental area. The shielded cells facilities (for Californium production) are shutdown except for two cells that are used for source transfers between shipping casks and mock-up operations. Section F contains HC-2 quantities of radionuclides. This portion of the building was added in the late 1960s. The SSCs are qualified as PC-1.

- The majority of the air exhausted from Sections E and F and a portion of the air exhausted from Sections B and C discharge to the SRNL Sand Filter (794-A, 792-A and 791-A) for additional filtration before release to the environment. The Sand Filter was added in the early 1970s. The SSCs are qualified as PC-1.

1.2 Confinement Ventilation Systems and Strategy

Confinement Ventilation Systems

The Central Hood Exhaust (CHEX) systems are two independent systems serving Sections B and C with about 30 lab modules in each section. Separate single stage HEPA filter banks serve individual or groups of lab modules. Three of four exhaust fans on-line is the normal operating configuration. Air is discharged to a 75 ft stack for each section of the building. In the event of a loss of power, the system reduces to one exhaust fan provided with standby power. In the event of a significant stack release, the normal exhaust fans can be shutdown and a booster fan (with standby) can be started to "divert" reduced airflow to the SRNL Sand Filter. The booster "diversion" fans are provided with standby power. See Attachment 1 Figures C, D and E.

The Process Hood Exhaust (PHEX) systems are three independent systems serving Sections B, C and F. Each system serves various enclosures, rooms or cells in the respective section of the building. The Section B and C systems have single or double stage HEPA filtration, and redundant exhaust fans. The Section F system has single, double or triple stage HEPA filtration and normally operates two of three exhaust fans. All three systems discharge to the SRNL Sand Filter. All the fans are provided with standby power. See Attachment 1 Figures C, D, E and F.

The Off-Gas Exhaust (OGE) system serves approximately 75 gloveboxes and other special process enclosures equipped with inlet and outlet HEPA filters. Two interconnected OGE sub-systems service Sections B, C and F. Each sub-system has redundant standby two stage HEPA filter housings, redundant exhaust fans and discharges to the SRNL Sand Filter. All the fans are provided with standby power. See Attachment 1, Figures C, G and H.

The B and C Shielded Area Exhaust (RREX) systems exhaust the B and C CHEX and PHEX HEPA filter rooms. There are two independent systems with single stage HEPA filtration and single exhaust fans that discharge to the 75 ft stack located at each section of the building. The fans are not provided with standby power.

The B and C Equipment Room Exhaust (RREX) systems exhaust the sub-basement equipment rooms where the CHEX, OGE and RREX fans are installed. There are two independent systems with single stage HEPA filtration and single exhaust fans that discharge to the 75 ft stack located at each section of the building. The fans are not provided with standby power.

The B and C HVAC Systems provide conditioned air to the offices and corridors (tertiary confinement zone) as well as directly into the labs. The system operates at 1/3 capacity on a loss of normal power or in CHEX Diversion mode (supply air to tertiary confinement zone only). The combined systems consist of thirty 100% outside air units. See Attachment 1, Figures C and D.

The B and C Change/Restroom (HV) exhaust systems are two independent low volume exhaust systems that serve the Men's and Ladies' change rooms. Neither system is HEPA filtered. No standby fans are provided and the fans are not connected to standby power. Each fan discharges to its own stack.

The Cell Exhaust (CE) systems are two independent systems serving the Section E Shielded Cells. Each system has three stages of HEPA filtration, redundant exhaust fans and discharges to the SRNL Sand Filter. All of the fans are provided with standby power. See Attachment 1, Figures I, J and K.

The E Miscellaneous Ventilation Systems, Regulated Room Exhaust – RREX and Local Hood Exhaust – LHEX, consist of six independent exhaust systems that exhaust various rooms in the secondary confinement zone used for loading and unloading cells, surveying samples, storing contaminated equipment and decontaminating equipment removed from the cells. Each system is provided with a single stage of HEPA filtration before discharging to the SRNL Sand Filter. Four systems are equipped with redundant exhaust fans. The other two systems have a normal fan only. One system is connected to standby power. See Attachment 1, Figure I.

The Section E HVAC System consists of two 100% outside air units (serving zones 1 and 3 respectively), one mixed air (partial return) system (serving zones 1 and 2) and two 100% recirculating systems (serving zone 4). None of the systems have redundant fans or standby power. See Attachment 1, Figures I, L and M.

The E Change/Restroom (HV) exhaust systems are two independent low volume exhaust systems. The Men's change room system is provided with HEPA filtration. No standby fans are provided and the fans are not connected to standby power. Each fan discharges to its own stack. See Attachment 1, Figure M.

Section F LHEX System exhausts two chemical labs in the tertiary confinement zone. The system is provided with HEPA filtration and redundant fans connected to standby power. The system discharges to its own stack.

Section F HVAC System consists of two 100% outside air units that are supplied with standby power. Air is supplied to the secondary and tertiary confinement zones. Interlocks between the supply and exhaust systems are provided. See Attachment 1, Figure F.

The Sand Filter (FHSF) system provides an additional stage of filtration before air is discharged to the environment. All primary confinement zone systems in Sections B, C, E and F discharge continuously or can be "diverted" (Section B and C CHEX system) to the Sand Filter. All secondary confinement zone systems in Sections E and F discharge to the Sand Filter. The Sand Filter is equipped with redundant exhaust fans and standby power. See Attachment 1, Figures N and O.

Stack Monitors and Sampling systems are provided for the three primary stacks from 773-A (B Stack, C Stack and Sand Filter Stack). Each stack has both an isokinetic sampling system used for environmental monitoring and a stack monitoring system with on-line alpha and beta/gamma monitors that report to the control room. See Attachment 1, Figure O.

Standby Power is provided by two diesel generators (D/Gs). The 773-A D/G provides standby power to Sections B, C, E and F. The Sand Filter D/G provides standby power to Sections B, C and F.

Confinement Ventilation Strategy

Sections B and C (Attachment 1, Figures C, D, E, G and H)

Primary confinement zones consist of gloveboxes, shielded cells, radiohoods, radiobenches and chemical hoods. Gloveboxes and Section C ILCs are served by the OGE System. Radiohoods, radiobenches, analytical cells and chemical hoods are served by either the CHEX System or the PHEX System. Supply air is transferred from the secondary confinement zones.

Secondary confinement zones consist of lab modules, HEPA filter rooms and equipment rooms. The lab modules are exhausted by the CHEX or PHEX systems. The B/C CHEX and PHEX HEPA filter rooms (B/C-005) are exhausted by the Shielded Area Regulated Room Exhaust (RREX) system. The B/C OGE HEPA filter rooms (B/C-002) are exhausted by the CHEX system. The B/C sub-basement equipment rooms (B/C-001) are exhausted by the Equipment Room RREX systems. The B/C supply air for the lab modules and change/restrooms is split between direct supply and transfer from the tertiary confinement zone. Supply air for HEPA filter rooms is transferred from the tertiary confinement zone.

Tertiary confinement zones consist of offices, change/restrooms, corridors and mechanical/electrical spaces and are supplied air by the HVAC system with the air being transferred to the secondary confinement zones. The change/restrooms are exhausted by independent exhaust (HV) systems.

Section E (Attachment 1, Figures I, J, K, L, M)

Primary confinement zones consist of the two cell blocks (A and B), as well as two manipulator repair gloveboxes. These areas are served by the two independent CE systems. Supply air is transferred from the secondary confinement zone.

Secondary confinement zones consist of the cell large equipment loading area (high bay), cell small equipment loading areas (transfer ports), manipulator glovebox room and cell operating areas. These areas have a limited quantity of direct supply air with the overwhelming majority being transferred from the tertiary confinement zone. These areas have a number of direct exhaust systems for locations with a higher contamination potential.

Tertiary confinement zones consist of office, change/restrooms, storage, maintenance and support spaces surrounding the secondary confinement zone. The spaces have a mixture of recirculating HVAC systems, 100% outside air HVAC systems and unfiltered exhaust systems. The men's and women's change rooms are directly exhausted to the environment.

Section F (Attachment 1, Figure F)

Primary confinement zones consist of two cell blocks (Medical Source Facility and Californium Processing Facility), gloveboxes and radiohoods. The cells, radiohoods and some gloveboxes are exhausted by the PHEX system. The remaining gloveboxes are exhausted by the OGE system. Supply air is transferred from the secondary confinement zones.

Secondary confinement zones consist of the lab modules, process rooms or experimental high bay. Direct exhaust to the PHEX system is provided in the process rooms and high bay. Direct supply air is provided in the lab modules. Transfer supply air is provided from the tertiary confinement zones for the process rooms and high bay.

Tertiary confinement zones consist of the operating areas, service galleries, office space and two non-radiological lab modules. With the exception of the two lab modules, air is supplied to the spaces and then is transferred to the secondary confinement zones. For the two lab modules, air is exhausted through fume hoods by a HEPA filtered exhaust system.

1.3 Major Modifications

There are currently no major modifications or anticipated mission changes for Building 773-A.

2.0 Functional Classification Assessment

2.1 Existing Classification

The confinement ventilation systems for SRNL Building 773-A are not credited in the design basis accident analyses for providing radiological dose reduction for the offsite and onsite receptors. Therefore, the mitigated and unmitigated dose to the Maximally Exposed Offsite Individual (MOI) and Co-located Worker (CW) are the same. However, some of the confinement ventilation systems for Building 773-A are functionally classified as Safety Significant to protect in-facility workers from potential radiological hazards from explosion events involving accumulation of process or distributed flammable gas. Table 4-3 (Attachment 2) provides a discussion of the DSA identified design basis events within the facility. The balance of the ventilation and support systems are functionally classified as General Services.

2.2 Evaluation

The DSA Hazard and Accident Analyses did not identify any Design Basis Accidents that challenge the Evaluation Guidelines for the Offsite Public or Co-located Worker as defined in the WSRC Consolidated Hazard Analysis Manual (Reference A). All the events are in the Low or Negligible Consequence regions (Attachment 3). The bounding NPH event doses are 1.9 rem to the MOI and 8.1 rem to the CW (50% meteorology). The bounding Process Event doses are 2.2 rem to the MOI and 10.8 rem to the CW. All these events assume a Leak Path Factor of 1.0.

The DSA credits several systems as Safety Significant for the Facility Worker based on qualitative analysis. These functions are detailed in Attachment 2 (Table 4-3).

2.3 Summary

The SS functional classification of several confinement ventilation systems for protection of the facility worker and GS functional classification of the balance of the confinement ventilation systems are appropriate.

3.0 System Evaluation

Using the Table 4-3 Evaluation Criteria, six events were identified that exceed the 1 rem criteria for the MOI. No events were identified that exceed the 100 rem criteria for the CW. This includes considering the impact of changing from 50% to 95% meteorological conditions for the CW analysis which was assumed to cause a five fold increase in the CW unmitigated consequences. The six events are listed below in Table 1a.

Table 1a – DSA Events Greater than DNFSB 2004-2 Evaluation Criteria

	Event	Section Applicability	Unmitigated Consequences
1	Explosion – Glovebox Overpressurization	B, C and F	CW 9.6 rem (1) MOI 1.9 rem
2	Process Explosion – Unstable Lab Chemical or Accumulation of Process Flammable Gas or VOCs with consequential fire	B, C, E and F	CW 10.5 rem (1) MOI 2.2 rem
3	Explosion – Accumulation of Distributed Flammable Gas with consequential fire	B, C and F	CW 10.8 rem (1) MOI 2.2 rem
4	Earthquake with consequential fire – Unstable Lab Chemical or Accumulation of Process Flammable Gas or VOCs with no consequential fire	B, C, E and F	CW 8.1 rem (1) MOI 1.6 rem
5	Tornado/High Winds with no consequential fire	B, C, E and F	CW 2.7 rem (1) MOI 1.1 rem
6	Tornado/High Winds with consequential fire	B, C, E and F	CW 6.6 rem (1) MOI 1.9 rem

(1) - Based on 50% Meteorology

Of those six events than exceed the 1 rem MOI evaluation criteria, five (2 thru 6) involve an NPH initiator or a Full Facility fire. These five events along with the six Table 5-1 evaluation criteria associated with fire and NPH events were excluded from further analysis based on guidance provided in References B and C. For additional information, see Attachment 4.

After exclusion of NPH and Full Facility Fire events, only one event (glovebox overpressurization) passed the screening criteria for Table 5-1 evaluation. However, to develop a more complete understanding of the hazards that can be mitigated by an active confinement ventilation system, the Facility Evaluation Team (FET) elected to include four additional events from the original hazards analysis (Reference D) for evaluation during preparation of the Table 5-1 Evaluation. These five events to be evaluated are listed below as Table 1b.

Table 1b - Events to be evaluated as Part of Table 5-1/System Evaluation

	Event	Section Applicability	Unmitigated Consequences (2)
1	Explosion – Glovebox Overpressurization	B, C and F	CW 9.6 rem (1) MOI 1.9 rem
2	Explosion – Accumulation of Distributed Flammable Gas with no consequential fire	B, C and F	CW 8.57 rem (1) MOI 1.68 rem
3	Drop / Spill	B, C, E and F	CW 1.5 rem (1) MOI 0.31 rem
4	Process Explosion – Unstable Lab Chemical or Accumulation of Process Flammable Gas or VOCs with no consequential fire	E	CW 1.5 rem (1) MOI 0.31 rem
5	Process Explosion – Unstable Lab Chemical or Accumulation of Process Flammable Gas or VOCs with no consequential fire	B, C and F	CW 1.1 rem (1) MOI 0.21 rem

(1) – Based on 50% Meteorology
(2) – Reference D

The accident analyses for the events in Tables 1a and 1b assumed a Leak Path Factor of 1.0 and assumed no mitigation from the Safety Significant active confinement ventilation systems that protect the facility worker.

As presented in the Table 4-3 report (Reference E), the ventilation systems in two sections of 773-A (A and D) as well four low capacity ventilation systems in Sections B and C were excluded from further analysis. Attachment 5, extracted from the Table 4-3 report, provides additional details and basis for excluding these systems/sections from further evaluation.

3.1 GAP Identification

Using the Safety Class (SC) performance criteria in the evaluation guidance (References B and F), the FET performed a functional review of 15 ventilation systems (773-A B/C-CHEX, B/C-PHEX, B/C-HVAC, B/C-RREX, B/C-HV, B/C/F-OGE, E-CE, E-HVAC, E-RREX, E-LHEX, E-HV, F-PHEX, F-HVAC, F-LHEX, and FHSF) serving four of six sections of Building 773-A. Since the SC performance criteria are used, the evaluation and identification of any associated gaps would not change if meteorological conditions were changed from 50% to 95% for the CW.

As discussed above, five process events were used as the basis of the evaluation and the six evaluation criteria for fire and NPH events were not included since 773-A is an existing facility. Based on the Low or Negligible consequence (Reference A and Attachment 3) of all the events, no evaluation criteria or attributes were considered mandatory by the Site Evaluation Team (SET) or FET.

A cross-cut matrix (Table 2) of the 58 identified gaps by system and criteria is provided on the following pages. A detailed list of the gaps is provided as Attachment 6. The basis for each gap is provided in Attachment 7 (Table 5-1 Work Sheets).

The FET has grouped and split the gaps across systems and criteria based on the following considerations:

In some cases, gaps have been combined across system boundaries where closure of the same criteria for multiple systems would need to be executed together to have the desired outcome. An example is the interlocks between the supply and exhaust systems in Section E, which cross four systems boundaries: E-HVAC, E-CE, E-RREX and E-LHEX.

In other cases, the same gap across multiple system boundaries has been evaluated separately since the priority for closing a gap may be different based on the consequence and likelihood of a specific event in a specific location. An example is that the B/C-CHEX systems serve 59 lab modules with the potential for events 1, 2, 3 and 5 to occur while the B/C-PHEX systems serve 5 labs with the potential for events 1, 3 and 5 and the F PHEX system serves 2 labs with the potential for events 1, 3 and 5. Therefore, the priority for closing any gaps associated with the B/C-CHEX system would have a higher priority to close than gaps only associated with the B/C-PHEX or F-PHEX systems.

Table 2
Page 1 of 2

Cross-Cut Matrix Identifying Gaps by Table 5.1 Evaluation Criteria
Building 773-A Ventilation Systems

System & Evaluation Criteria	B&C-CHEX	B&C-PHEX	B/C/F-OGE	B&C-RREX	B&C-HVAC	B&C-HV	E-CE	E-RREX	E-HVAC	E-LHEX	E-HV	F-PHEX	F-LHEX	F-HVAC	FHSF
1.1	✔	✔	✔	✔	✔	✔	✔	✔	✔	✔	✔	✔	✔	✔	✔
1.2	✔	✔	✔	✔	✔	✔	✔	✔	✔	✔	✔	✔	✔	✔	✔
1.3	1	✔	✔	✔	2	✔	✔	✔	✔	✔	✔	✔	✔	✔	✔
1.4	✔	✔	✔	✔	✔	8	23, 24	39	33	35	28	✔	✔	✔	✔
2.1	✔	✔	19, 20	✔	13, 14	9	25	40, 41	34	✔	29	50-52	45, 46	✔	✔
2.2	3	3	✔	16	3	✔	26	26	26	26	✔	✔	✔	✔	✔
2.3	✔	✔	✔	✔	✔	10	✔	✔	✔	✔	30	✔	47	✔	✔
2.4	✔	✔	✔	✔	13	9	✔	✔	✔	✔	✔	✔	✔	✔	✔
2.5	✔	✔	21	✔	2	✔	✔	✔	✔	✔	✔	53	✔	✔	✔
3.1	✔	✔	✔	✔	✔	✔	✔	✔	✔	✔	✔	✔	✔	✔	✔
3.2	✔	✔	✔	✔	✔	✔	✔	✔	✔	✔	✔	✔	✔	✔	✔
4.1	✔	✔	✔	✔	✔	✔	✔	✔	✔	✔	✔	✔	✔	✔	✔

✔ - No Gap # – Gap Number

Table 2
Page 2 of 2

Cross-Cut Matrix Identifying Gaps by Table 5.1 Evaluation Criteria
Building 773-A Ventilation Systems

System & Evaluation Criteria	B&C-CHEX	B&C-PHEX	B/C/F-OGE	B&C-RREX	B&C-HVAC	B&C-HV	E-CE	E-RREX	E-HVAC	E-LHEX	E-HV	F-PHEX	F-LHEX	F-HVAC	FHSF
5.1	✔	✔	✔	✔	✔	✔	✔	✔	✔	✔	✔	✔	✔	✔	✔
5.2	✔	✔	✔	✔	✔	✔	✔	✔	✔	✔	✔	✔	✔	✔	✔
6.1	✔	✔	✔	✔	✔	✔	✔	✔	✔	✔	✔	✔	✔	✔	✔
7.1	✔	✔	✔	✔	✔	✔	✔	✔	✔	✔	✔	✔	✔	✔	✔
8.1	4,5	4	✔	✔	✔	✔	✔	42	✔	36	✔	54	✔	✔	✔
8.2	✔	✔	✔	✔	✔	✔	✔	✔	✔	✔	✔	✔	✔	✔	✔
8.3	✔	✔	✔	✔	✔	✔	✔	✔	✔	✔	✔	✔	✔	✔	✔
9.1	✔	✔	✔	✔	✔	✔	✔	✔	✔	✔	✔	✔	✔	✔	✔
10.1	6,7	15	21, 22	17	✔	11	27, 58	43	✔	37	31	55	48, 49	✔	56
10.2	✔	✔	✔	18	✔	12	✔	44	✔	38	32	✔	✔	✔	57
10.3	✔	✔	✔	✔	✔	✔	✔	✔	✔	✔	✔	✔	✔	✔	✔
11.1	✔	✔	✔	✔	✔	✔	✔	✔	✔	✔	✔	✔	✔	✔	✔

✔ - No Gap # – Gap Number

3.2 GAP Evaluations

Since 773-A is already provided with General Services active confinement ventilation systems that would provide some mitigation for the evaluated process events, the FET considered the following criteria when evaluating the 58 gaps for closure:

- Does the gap identify a discrepancy between the DSA and field conditions?
- Is the gap associated with a primary, secondary or tertiary confinement system?
- Could closing the gap decrease the probability of an event from occurring?
- Could closing the gap provide the ability to mitigate an event from Low to Negligible consequence level? (Reference A and Attachment 3)
- Would closing an alternative gap provide the same or better mitigation of an event at a lower cost?
- Is the process in the primary confinement zone active or shutdown (Reference G Page 2.5-29 thru 2.5-33)?
- The number of active process areas affected by the gap (see last paragraph of Section 3.1)

The recommendation and priority to close individual gaps is summarized in Table 3. Discussion of each individual gap recommendation is provided in Attachment 8. A cross-walk of gaps recommended for closure which reduce the potential or mitigate the consequence of the five evaluated process events is provided in Attachment 9. A summary of Table 3 is as follows:

- Overall 24 of 58 gaps are recommended to be closed.
- No gaps are identified that constituted a discrepancy between the DSA and field conditions.
- 23 gaps are related to a primary confinement zone. Of these gaps, 15 are recommended to be closed (Gaps 1, 4, 5, 6, 15, 20, 21, 22, 23, 24, 27, 53, 55, 56 and 58 for systems B/C-CHEX, B/C-PHEX, B/C/F-OGE, E-CE, F-PHEX and FHSF).
- 25 gaps are related to a secondary confinement zone. Of these gaps, 14 are recommended to be closed (Gaps 3, 4, 6, 15, 26, 35, 36, 37, 38, 39, 40, 42, 55 and 56 for systems B/C-CHEX, B/C-PHEX, B/C-HVAC, E-RREX, E-LHEX, F-PHEX, F-HVAC and FHSF).
- 31 gaps are related to a tertiary confinement zone. Of these gaps, 12 are recommended to be closed (Gaps 3, 6, 26, 35, 36, 37, 38, 39, 40, 42, 55 and 56 for systems B/C-CHEX, B/C-PHEX, B/C-HVAC, E-RREX, E-LHEX, F-PHEX and FHSF).

- 8 gaps could decrease the probability (prevent) of the Low consequence events to Negligible. Of these gaps, 7 are recommended to be closed (Gaps 6, 20, 21, 22, 53, 55 and 56).

- 9 gaps could decrease the probability (prevent) of a Negligible consequence event. Of these gaps, all 9 are recommended to be closed (Gaps 6, 15, 20, 21, 22, 27, 53, 56 and 58 for systems B/C-CHEX, B/C-PHEX, B/C-OGE, E-CE, F-PHEX and FHSF).

- 8 gaps could increase the ability of the existing system to mitigate of a Low consequence event to Negligible. Of these gaps, 7 are recommended to be closed (Gaps 3, 4, 6, 15, 53, 55 and 56 for systems B/C-CHEX, B/C-HVAC, B/C-PHEX, F-PHEX and FHSF).

- 36 gaps could increase the ability of the existing system to mitigate a Negligible consequence event. Of these gaps, 18 are recommended to be closed (Gaps 1, 3, 4, 5, 6, 15, 26, 27, 35, 36, 37, 38, 39, 42, 53, 55, 56 and 58 for systems B/C-CHEX, B/C-HVAC, B/C-PHEX, E-CE, E-RREX, E-LHEX, F-PHEX and FHSF).

- 16 gaps are not recommended for closure based upon the FET's evaluation that closure of an alternative gap would also mitigate this gap. (Gaps 2, 7, 8, 9, 10, 11, 12, 13, 14, 19, 28, 29, 30, 31, 32 and 33)

- 3 of the gaps identified dealt with inactive facilities. None of these gaps are recommended to be closed. (Gaps 50, 51 and 54)

Table 3
Page 1 of 2

Gap Recommendations and Closure Priority

Gap No.	Confinement Zone			Event Criteria				Recommend Close Gap	Priority to Close Gap
	Primary	Secondary	Tertiary	A	B	C	D		
1	x						x	Y	Low
2		x	x				x	N	
3		x	x			x	x	Y	High
4	x	x				x	x	Y	High
5	x						x	Y	Low
6	x	x	x	x	x	x	x	Y	High
7	x	x				x	x	N	
8			x				x	N	
9			x				x	N	
10			x				x	N	
11			x				x	N	
12			x				x	N	
13		x	x					N	
14			x				x	N	
15	x	x			x	x	x	Y	Low
16		x					x	N	
17		x					x	N	
18		x					x	N	
19	x							N	
20	x			x	x			Y	Low
21	x			x	x			Y	Low
22	x			x	x			Y	Low
23	x							Y	Low
24	x							Y	Low
25	x							N	
26		x	x				x	Y	Low
27	x				x		x	Y	Low
28			x				x	N	
29			x				x	N	

A – Potential to prevent Low consequence event if gap is closed
B – Potential to prevent Negligible consequence event if gap is closed
C – Potential to mitigate Low consequence event if gap is closed
D – Potential to mitigate Negligible consequence event if gap is closed

High – Closes a gap with potential MOI dose greater than 1 rem (Low consequence) that the FET feels will provide a significant improvement in the performance of the confinement ventilation systems.

Medium – Closes a gap with a potential negligible MOI dose that the FET feels will provide a significant improvement in the performance of the confinement ventilation systems.

Low – Closes a gap that the FET feels will provide a meaningful improvement in the performance of the confinement ventilation systems.

Table 3
Page 2 of 2

Gap Recommendations and Closure Priority

Gap No.	Confinement Zone			Event Criteria				Recommend Close Gap	Priority to Close Gap
	Primary	Secondary	Tertiary	A	B	C	D		
30			x				x	N	
31			x				x	N	
32			x				x	N	
33		x					x	N	
34		x	x					N	
35		x					x	Y	Medium
36		x					x	Y	Medium
37		x					x	Y	Medium
38		x					x	Y	Medium
39		x					x	Y	Low
40		x					x	Y	Medium
41		x						N	
42		x					x	Y	Medium
43		x						N	
44		x						N	
45			x					N	
46			x					N	
47			x					N	
48			x					N	
49			x					N	
50	x			x				N	
51	x							N	
52	x							N	
53	x	x		x	x	x	x	Y	Low
54	x						x	N	
55	x	x	x	x		x	x	Y	Low
56	x	x	x	x	x	x	x	Y	Low
57	x							N	
58	x				x		x	Y	Medium

A – Potential to prevent Low consequence event if gap is closed
B – Potential to prevent Negligible consequence event if gap is closed
C – Potential to mitigate Low consequence event if gap is closed
D – Potential to mitigate Negligible consequence event if gap is closed

High – Closes a gap with potential MOI dose greater than 1 rem (Low consequence) that the FET feels will provide a significant improvement in the performance of the confinement ventilation systems.

Medium – Closes a gap with a potential negligible MOI dose that the FET feels will provide a significant improvement in the performance of the confinement ventilation systems.

Low – Closes a gap that the FET feels will provide a meaningful improvement in the performance of the confinement ventilation systems.

3.3 Modifications and Upgrades

Scopes and estimates were developed for the closure of the identified gaps. The process was simplified by grouping similar gaps together and developing parametric estimates when appropriate. The estimates developed are Total Project Cost (TPC) in FY07 dollars. They include both the Total Estimated Cost (TEC) and Other Project Cost (OPC)/Operating Expense (OPEX) to complete closing the gap. The majority of the estimates are Rough Order of Magnitude (Class 4 and 5 Estimates). Some gaps had been previously identified by the facility to improve operational safety and have more detailed project definition. These estimates are provided with a tighter estimate range than typical of a Class 4 or 5 Estimate. For some gaps, several alternatives were considered for closing the gap. Discussion is provided as appropriate to justify why an alternative closure was selected.

The duration to close all the gaps is estimated to be between 8 and 10 years. The duration to close the recommended gaps is estimated to be between 4 and 6 years, contingent upon funding. Closure of individual gaps varies in duration from 2 months to 4 years. Total duration is driven by the need to maintain laboratory operations, i.e. certain gap closure activities can not be performed concurrently without placing the overall facility confinement strategy/air balance at risk.

The cost range to close all the gaps is between $37M and $107M depending upon the gap closure method selected. The cost range to close the recommended gaps using the method recommended is between $23M and $33M. A cost estimate summary is provided as Table 4 at the end of this section.

Discussion of individual gaps including closure scope(s), estimate range and recommendation (Close/Not Close and Alternatives to Close Gap) is provided in Attachment 8. The task number in the estimate range section provides a link to the background file for each task.

Table 4
High/Low Gap Estimates ($K)

Gap Number	All Gaps and Alternative		Recommended Gaps and Selected Alternatives	
	Low	High	Low	High
1	190	290	190	290
2	3,200	5,100	0	0
3	3,900	5,700	3,900	5,700
4	10,000	57,000	10,000	15,000*
5 (see Gap #1)	0	0	0	0
6	150	250	150	250
7	1,200	1,800	0	0
8	600	5,200	0	0
9 (see Gap #8)	0	0	0	0
10 (see Gap #8)	0	0	0	0
11 (see Gap #8)	0	0	0	0
12 (see Gap #8)	0	0	0	0
13	1,200	1,700	0	0
14	130	185	0	0
15	150	250	150	250
16	300	600	0	0
17	2,000	3,200	0	0
18	300	500	0	0
19	420	630	0	0
20	3,400	4,300	3,400	4,300
21	100	200	100	200
22	150	250	150	250
23	2	30	2	4*
24	2	35	2	4*
25	160	240	0	0
26	600	1,000	600	1,000
27	830	1,200	830	1,200
28	300	5,200	0	0
29 (see Gap #28)	0	0	0	0
30 (see Gap #28)	0	0	0	0
31 (see Gap #28)	0	0	0	0
32 (see Gap #28)	0	0	0	0
33	215	320	0	0
34	600	1000	0	0
35	2000	2300	2000	2300
36 (see Gap #35)	0	0	0	0
37 (see Gap #35)	0	0	0	0
38	75	250	75	250
39 (see Gap #35)	0	0	0	0
40 (see Gap #35)	0	0	0	0
41	250	300	0	0
42 (see Gap #35)	0	0	0	0
43	350	500	0	0
44	150	300	0	0
45	20	30	0	0
46	100	200	0	0
47	90	1,500	0	0
48	600	1,000	0	0
49	150	250	0	0
50	35	65	0	0
51	80	120	0	0
52	740	1100	0	0
53	70	110	70	110
54	180	240	0	0
55	75	125	75	125
56	650	1,300	650	1,300
57	500	750	0	0
58	390	550	390	550
Total	36,604	107,170	22,734	33,083

* - Gap Closure Estimate where lower cost alternative was selected (See Section 3.3 first and last paragraph)

4.0 Conclusion

The evaluation identified that there are no gaps that require immediate attention. All 58 gaps were found to be discretionary in nature since none of the gaps involved a discrepancy between the DSA requirements and the facility design.

In reviewing the discretionary gaps, closure of a number of gaps (24) would be necessary to credit the key existing primary and secondary confinement ventilation systems as Safety Class or Safety Significant for protection of the MOI or CW. Closure of these gaps would provide a discernable improvement in the reliability and effectiveness of the existing integrated active confinement ventilation system for protection of the facility worker.

Based on the original Recommendation 2004-2 discussion, the FET recommends that Gaps 3, 4, and 6 be closed in the near term to provide a Safety Significant primary confinement ventilation system for 773-A Sections B and C. These two sections of the building are the most likely location for a process event with an MOI potential dose greater than 1 rem. The cost range in FY07 dollars to close these three gaps is between $14M and $21M. The schedule duration, if funded as a single project, is between 36 and 42 months. If funded as currently forecast in the SRNL Infrastructure Plan, the work would be completed no sooner than 2017.

Based on the feedback from the IRP and DNFSB during the ARP Pilot, the FET recommends that the following 7 gaps be closed, at the Functional Classification level of Safety Significant, in the near term as incremental improvements to the performance of the confinement ventilation systems in 773-A Section E:

- Close Gaps 35, 36, 37, 38, 40 and 42 to increase the performance and reliability of the Secondary Confinement Zone Ventilation Systems that support loading and unloading the shielded cells. The cost range in FY07 dollars to close these gaps is between $1.5M and $2.0M. The schedule duration is between 18 and 24 months. Design for this project is already 70% complete and engineered material has been purchased. Funding is needed to complete the design, construction and start-up phases.

- Close Gap 58 to increase the reliability of the Primary Confinement Zone Ventilation System in Section E for the shielded cells. The cost range in FY07 dollars to close this gap is between $390K and $500K. The schedule duration is between 12 and 18 months. Design for this project is already complete.

Based on the enduring mission of SRNL in Building 773-A, the FET recommends that the following 14 gaps be closed, at the Functional Classification level of Safety Significant, over the long term to provide incremental improvements to the performance of the confinement ventilation systems in 773-A:

- For events with an MOI potential dose greater than or equal to 1 rem, the FET recommends closing Gaps 15, 20, 21, 22, 53, 55 and 56 associated with the primary confinement systems in 773-A Sections B, C and F. The cost range in FY07 dollars to close these gaps is $4.6M to $6.5M.

- For events with an MOI potential dose less than 1 rem, the FET recommends closing Gaps 23, 24, 26, 27 and 39 associated with the primary and secondary confinement systems in 773-A Section E and Gaps 1 and 5 associated with the 773-A Section B/C CHEX. The cost range in FY07 dollars to close these gaps is $1.5M to $3.0M.

5.0 References

A) WSRC-SCD-11, Consolidated Hazard Analysis Process Program & Methods, Table 7-2 Consequence Evaluation Level for Hazard Receptors, Rev. 5, April 15, 2007

B) Ventilation System Evaluation Guidance for Safety-Related and Non-Safety Related Systems, Rev. 0, January 2006

C) 2004-2 Ventilation System Evaluation Guidance Addendum, March 7, 2007

D) S-CLC-A-00130, Updated Source Term and Radiation Dose Calculation to Support SRNL Safety Basis Documentation, Rev. 0, June 2006

E) SRNL-ROE-2007-00063, Savannah River National Laboratory Building 773-A, DNFSB 2004-2 Active Confinement Ventilation System Evaluation Table 4-3, April 23, 2007

F) D. Y. Chung to J. M. Allison, Request for Concurrence with Recommendation of the Defense Nuclear Facility Safety Board (DNFSB) 2004-2 Table 4.3 Data Collection for the Savannah River National Laboratory (SRNL), June 19, 2007

G) WSRC-SA-2, SRNL Technical Area Documented Safety Analysis (DSA), Rev. 3, February 2007

H) SRNL-ROE-2007-00093, DNFSB 2004-2 Table 5-1 Submittal for Savannah River National Laboratory (SRNL) Building 773-A, Sections B&C Ventilation and Off-Gas Exhaust (OGE) Systems, June 27, 2007

I) SRNL-ROE-2007-00115, DNFSB 2004-2 Table 5-1 Submittal for Savannah River National Laboratory (SRNL) Building 773-A Section E & F Ventilation and Sand Filter Systems, July 25, 2007

J) WSRC-TS-97-0014, SRNL Technical Area Technical Safety Requirements, Rev. 4, February 2007

Attachment 1 – List of Figures

	Page Number
Figure A – Picture of SRNL Technical Area	A1-2
Figure B – Building 773-A, SRNL Main Laboratory Floor Plan	A1-3
Figure C – Building 773-A Process Ventilation System	A1-4
Figure D – Building 773-A General Schematic Air Flow Patterns – Section B and C	A1-5
Figure E – Typical Section B and C CHEX and PHEX Hood and Exhaust Filter Arrangement	A1-6
Figure F – Building 773-A Ventilation Diagram – Section F	A1-7
Figure G – B Section OGE System – Basic Configuration	A1-8
Figure H – C Section OGE System – Basic Configuration	A1-9
Figure I – Building 773-A – Section E Ventilation Single Line	A1-10
Figure J – Section E A Cell Block Exhaust Diagram	A1-11
Figure K – Section E B Cell Block Exhaust Diagram	A1-12
Figure L – Building 773-A Ventilation Zones – Section E	A1-13
Figure M – Building 773-A Zone 1 Service Floor Ventilation – Section E	A1-14
Figure N – Sand Filter Flow Diagram	A1-15
Figure O – Schematic Building 773-A Exhausts, Stack Monitor Locations	A1-16
Figure P – Pictorial Representation of Tape-In-Place HEPA Filter Housing	A1-17

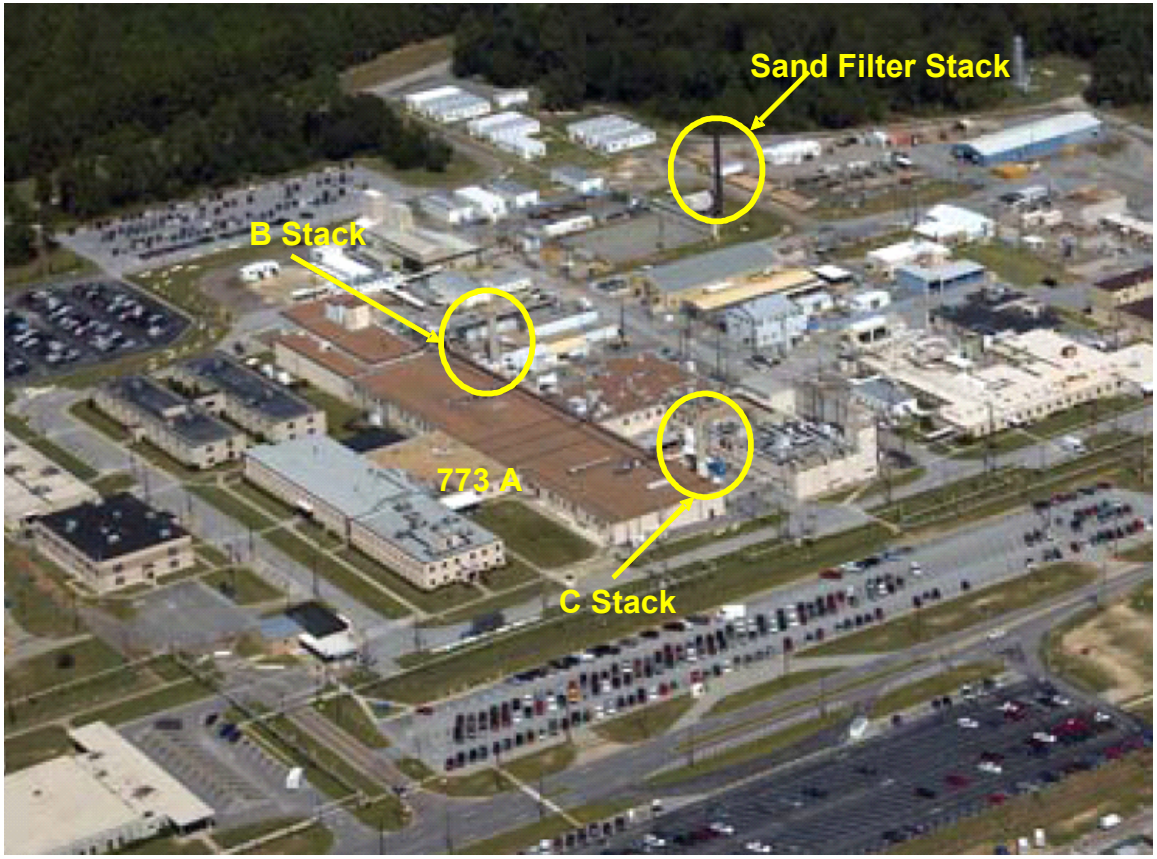

Attachment 1 - Figure A

Picture of SRNL Technical Area

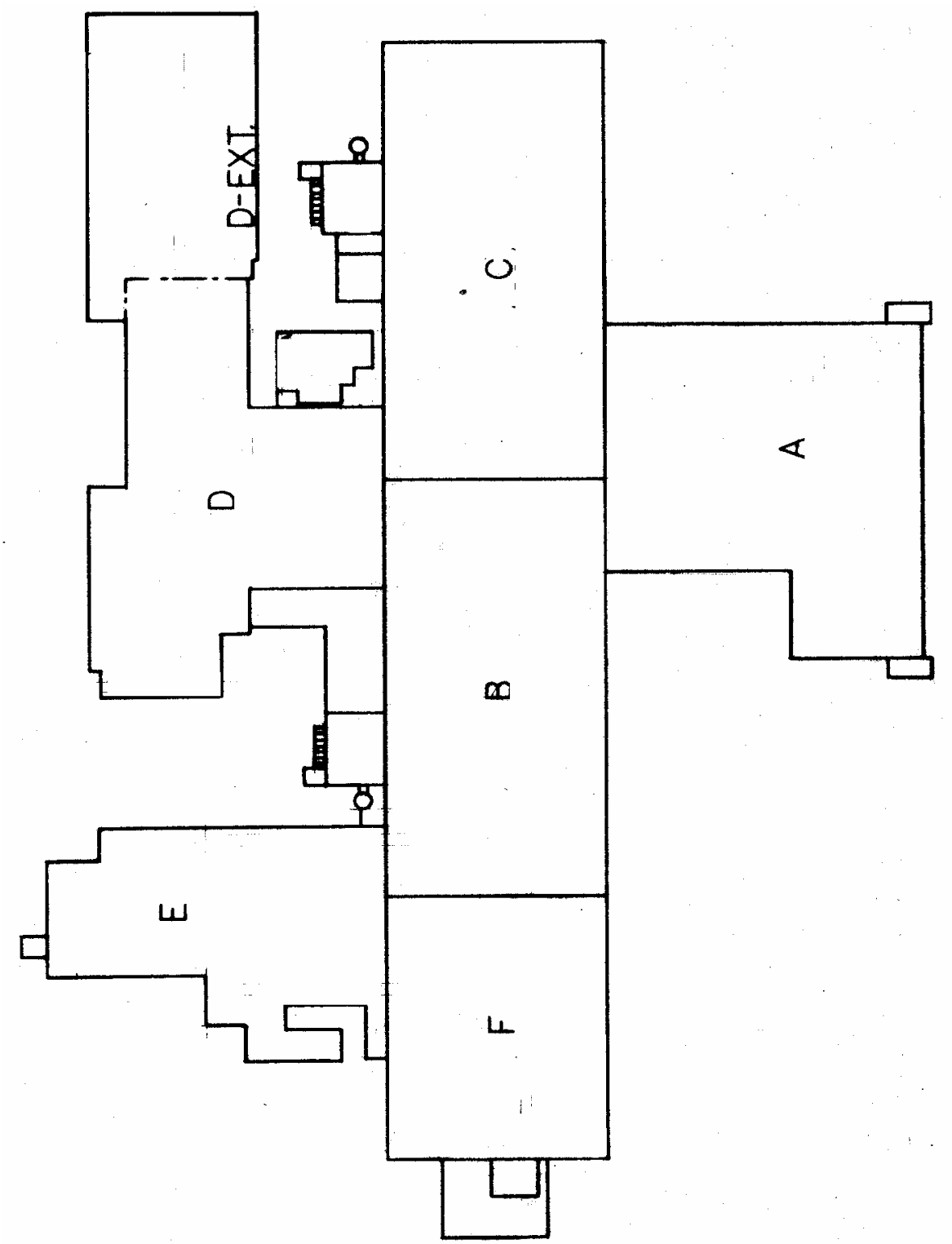

Attachment 1 – Figure B

Building 773-A, SRNL Main Laboratory Floor Plan

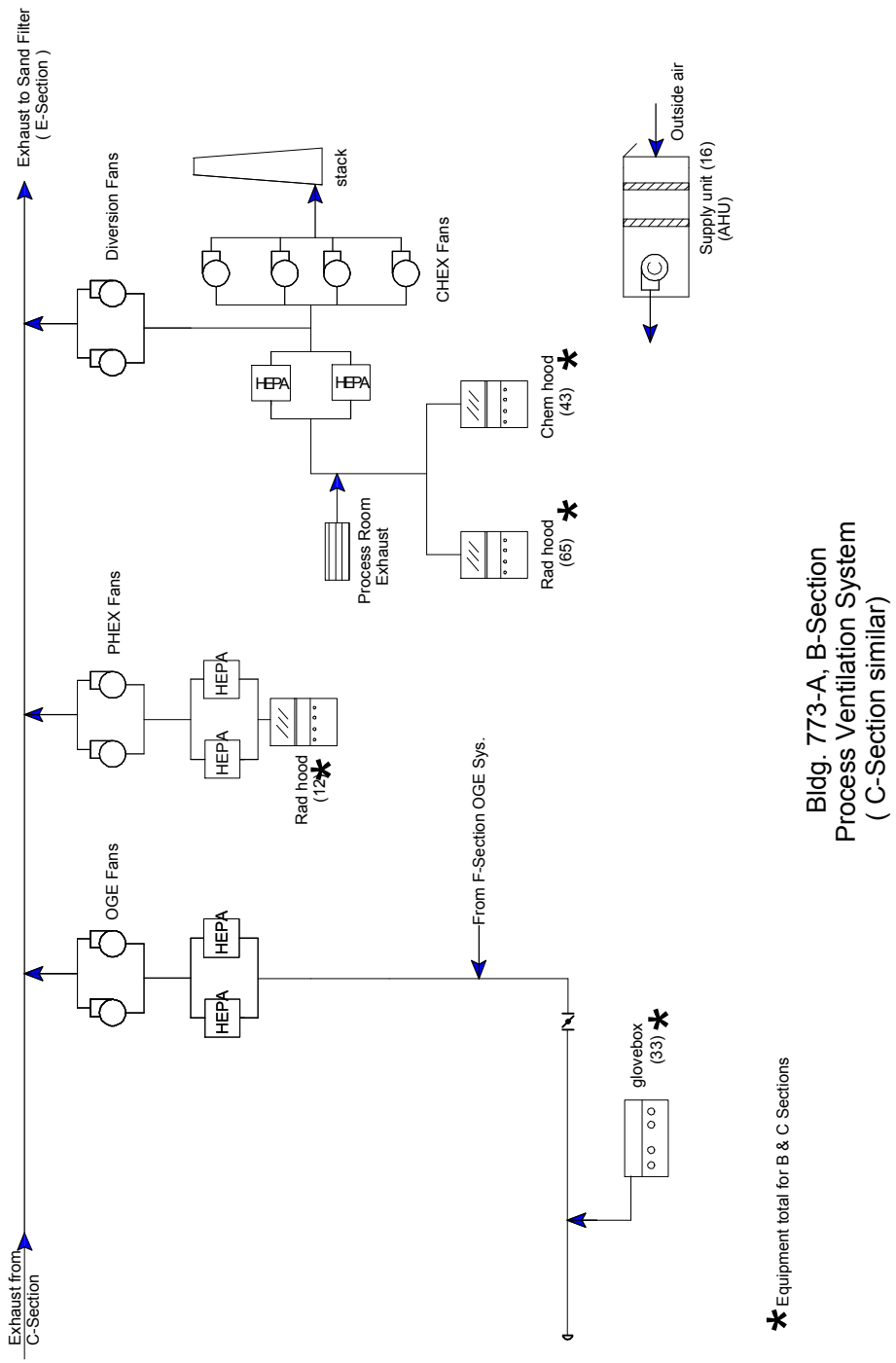

Attachment 1 - Figure C

Building 773-A Process Ventilation System

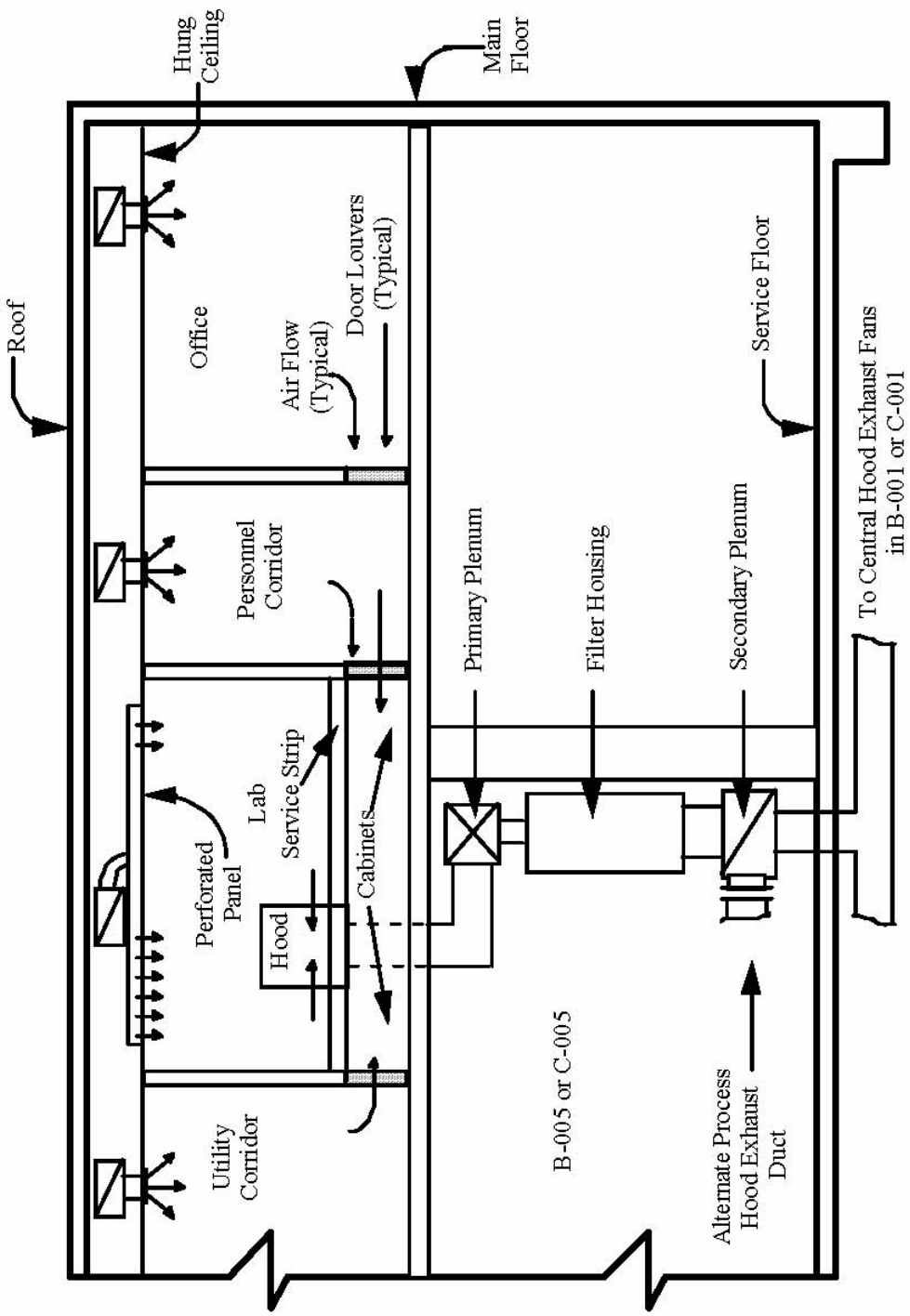

Attachment 1 - Figure D

Building 773-A General Schematic Air Flow Patterns – Sections B and C

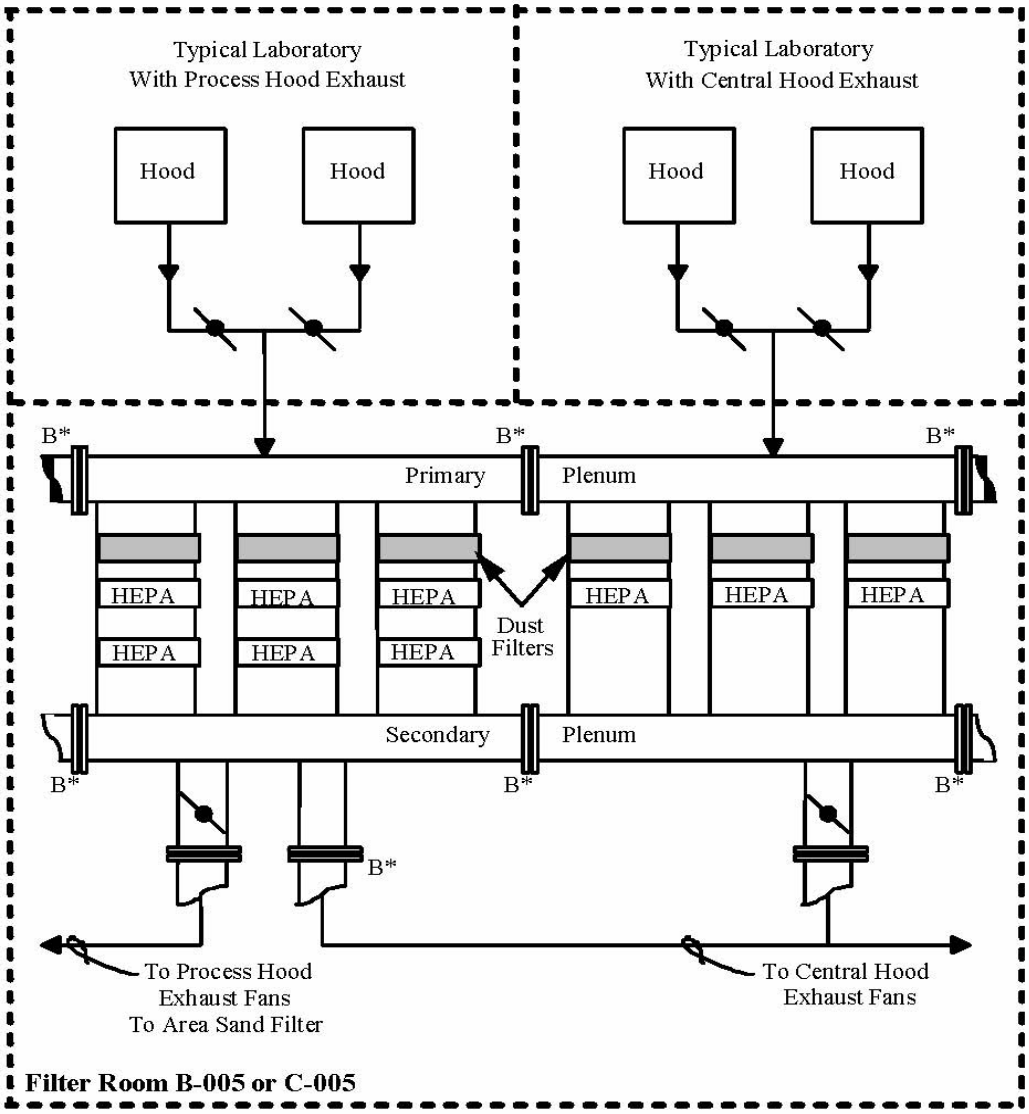

B* - Flange with Blank Plate

Note that blanks isolate the process hood exhaust system from the central hood exhaust system.

Attachment 1 - Figure E

Typical Section B and C CHEX and PHEX Hood and Exhaust Filter Arrangement

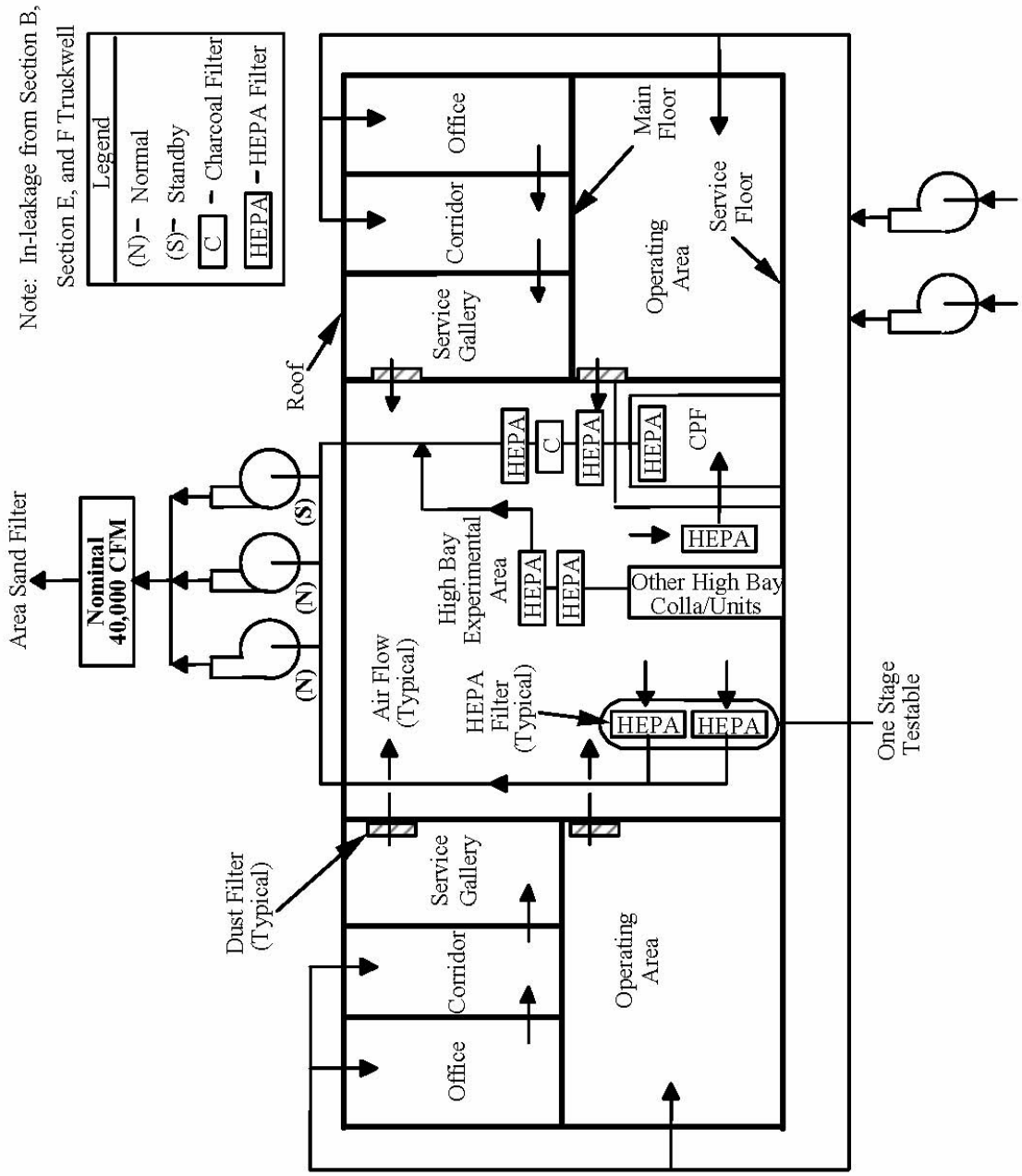

Attachment 1 - Figure F

Building 773-A Ventilation Diagram - Section F

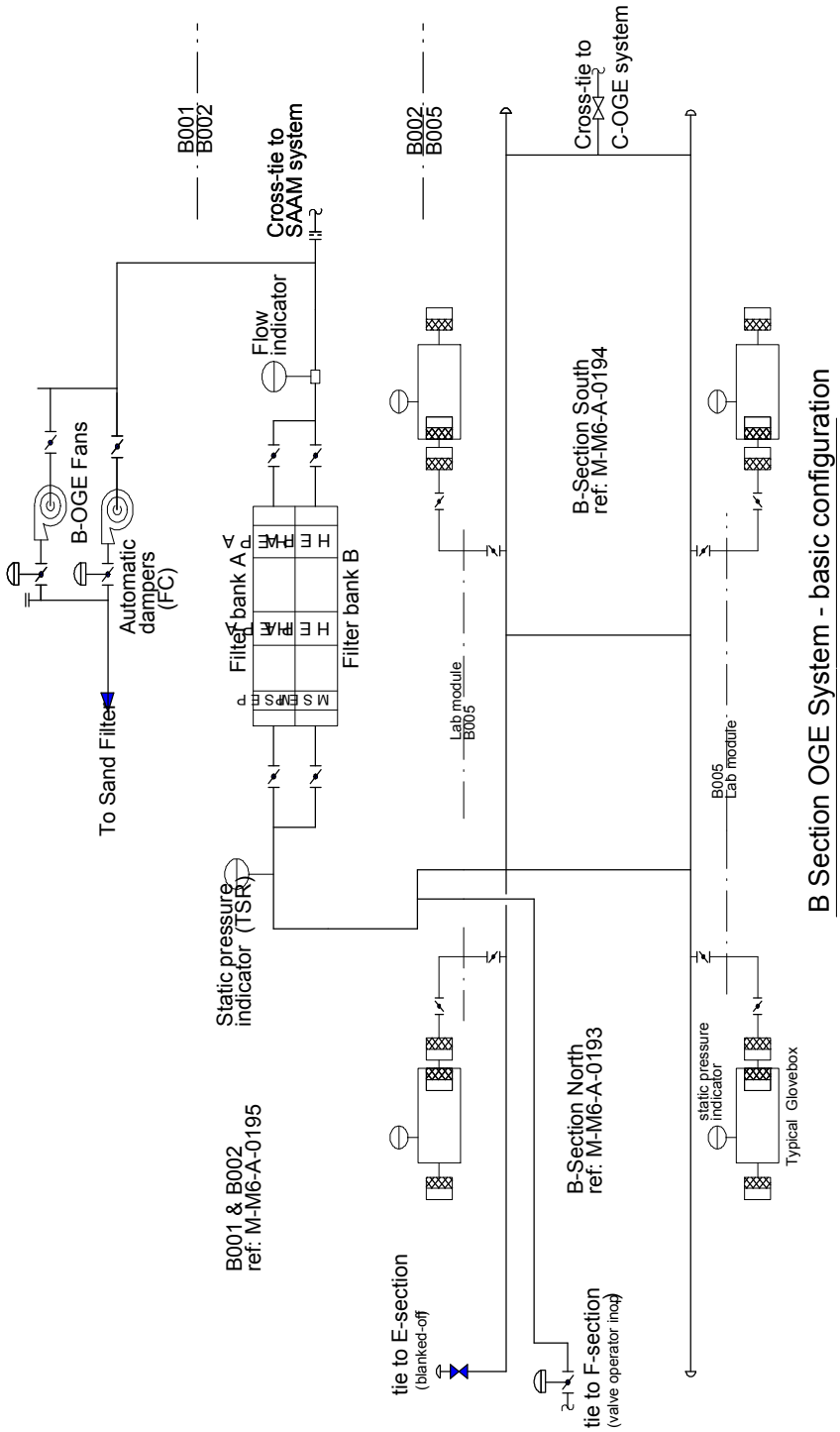

Attachment 1 - Figure G

B Section OGE System - Basic Configuration

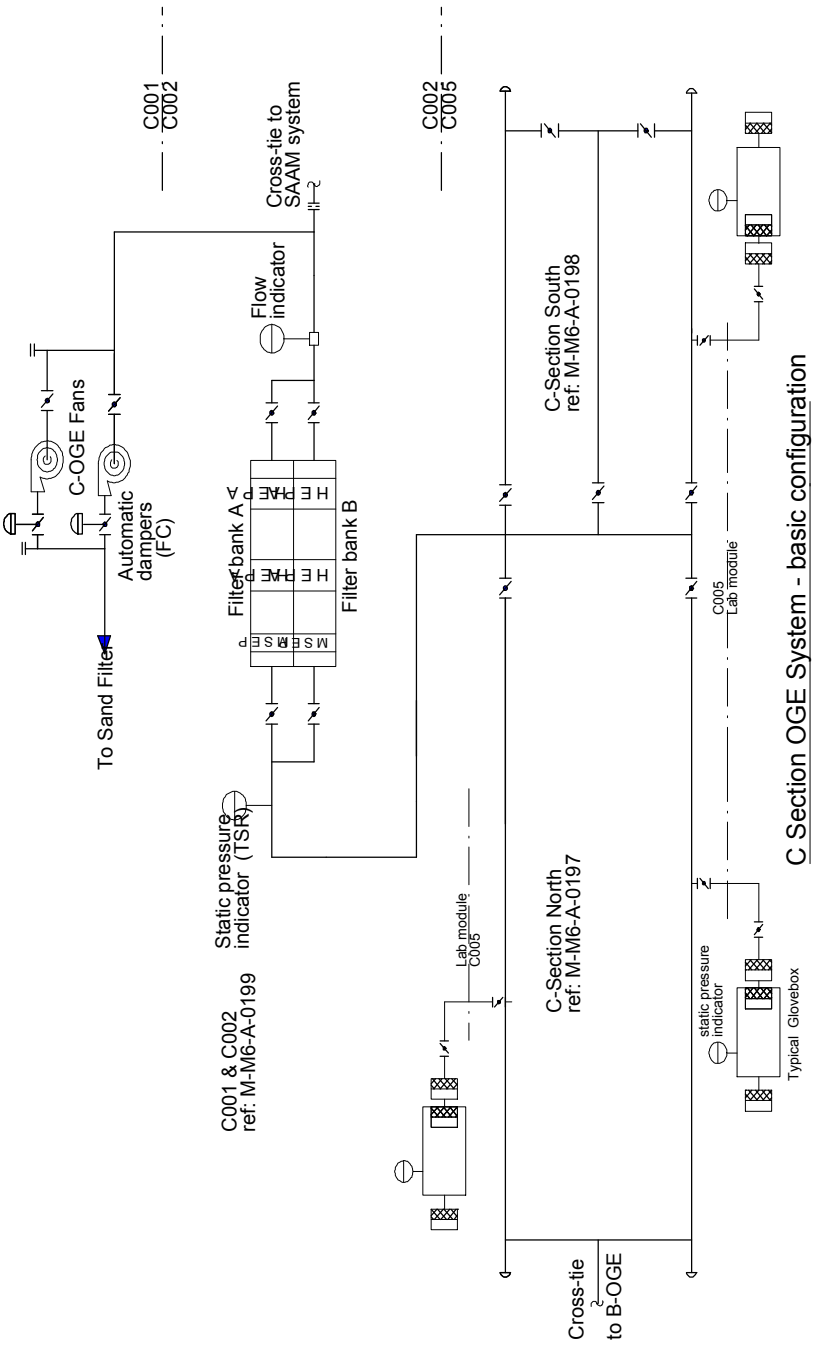

Attachment 1 - Figure H

C Section OGE System - Basic Configuration

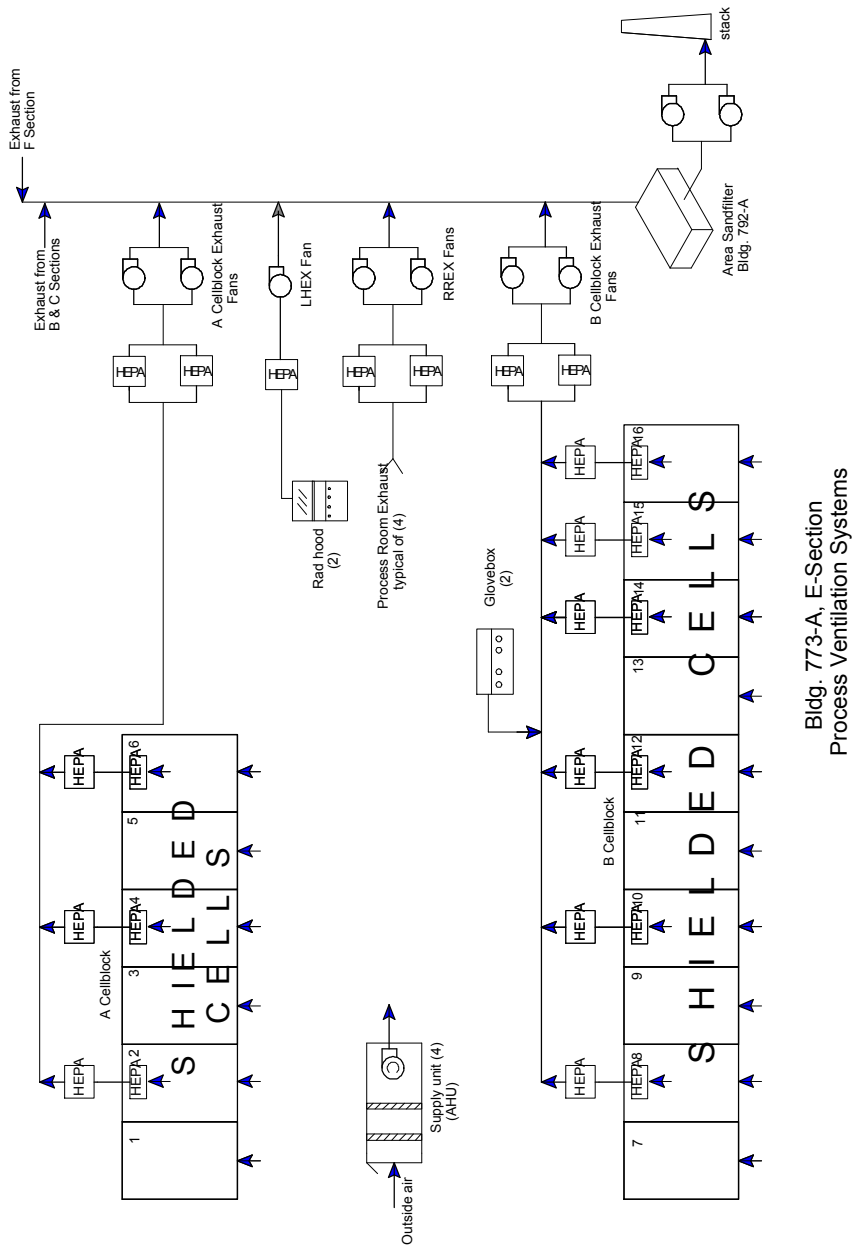

Attachment 1 - Figure I

Building 773-A – Section E Ventilation Single Line

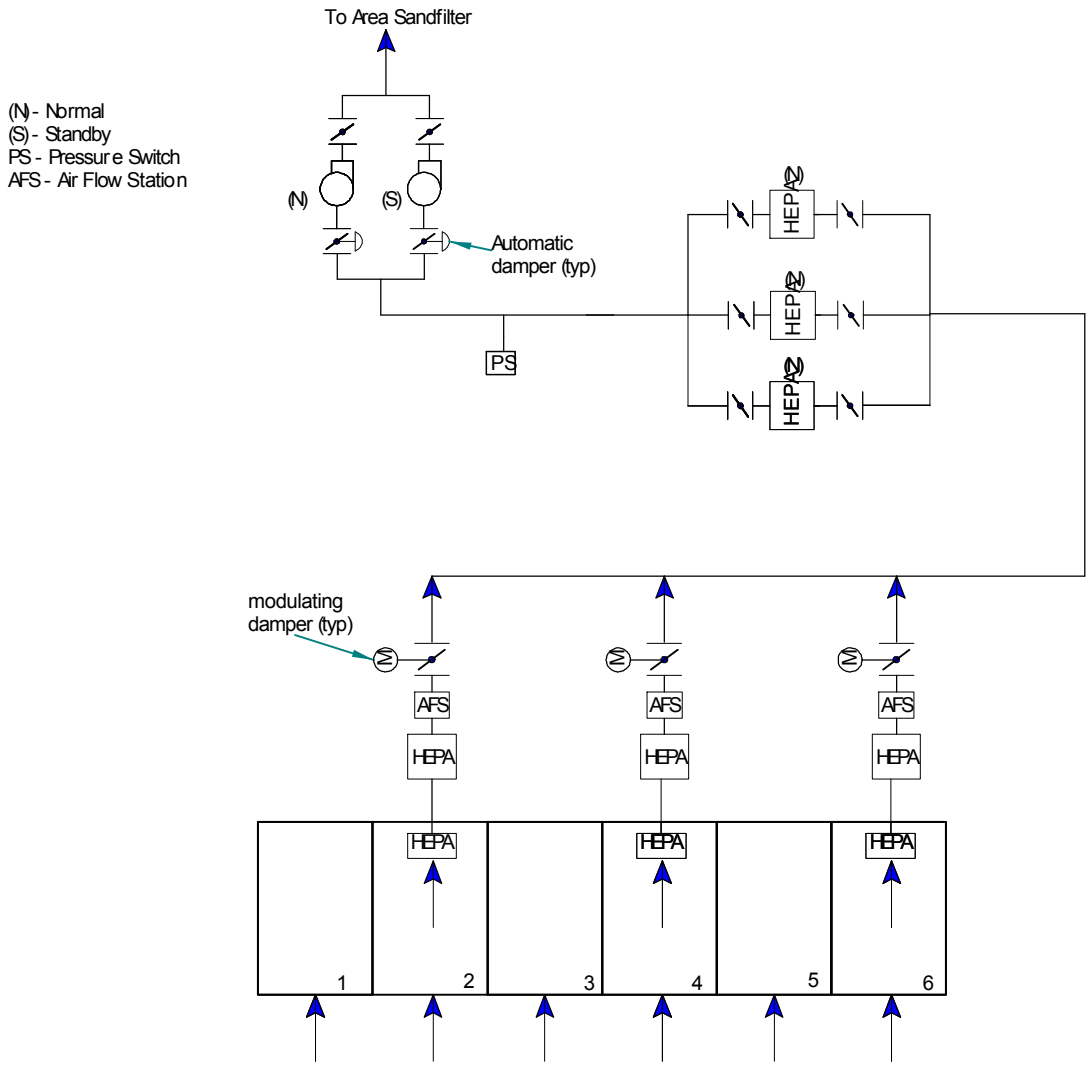

Attachment 1 - Figure J

Section E A Cell Block Exhaust Diagram

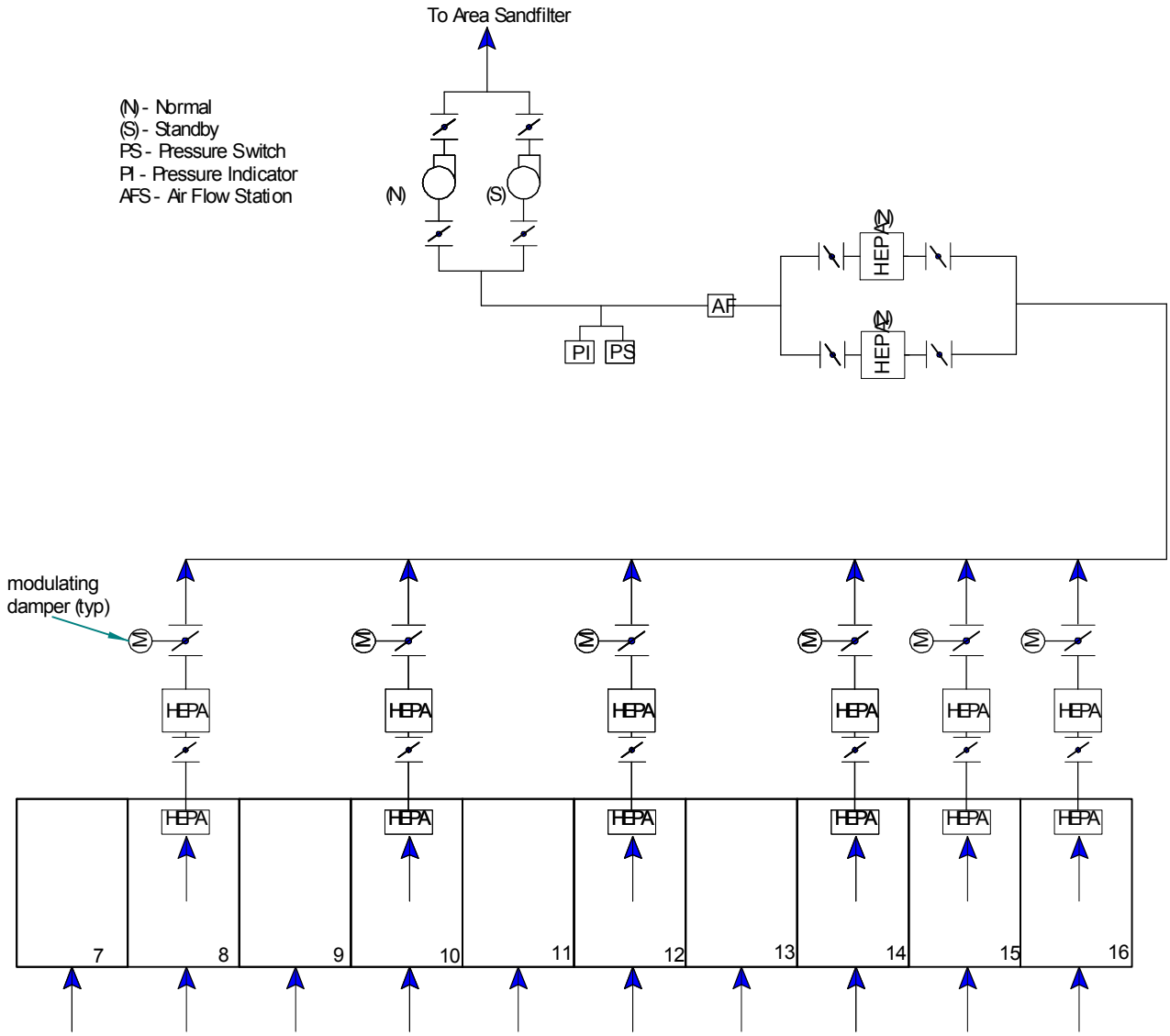

Attachment 1 - Figure K

Section E B Cell Block Exhaust Diagram

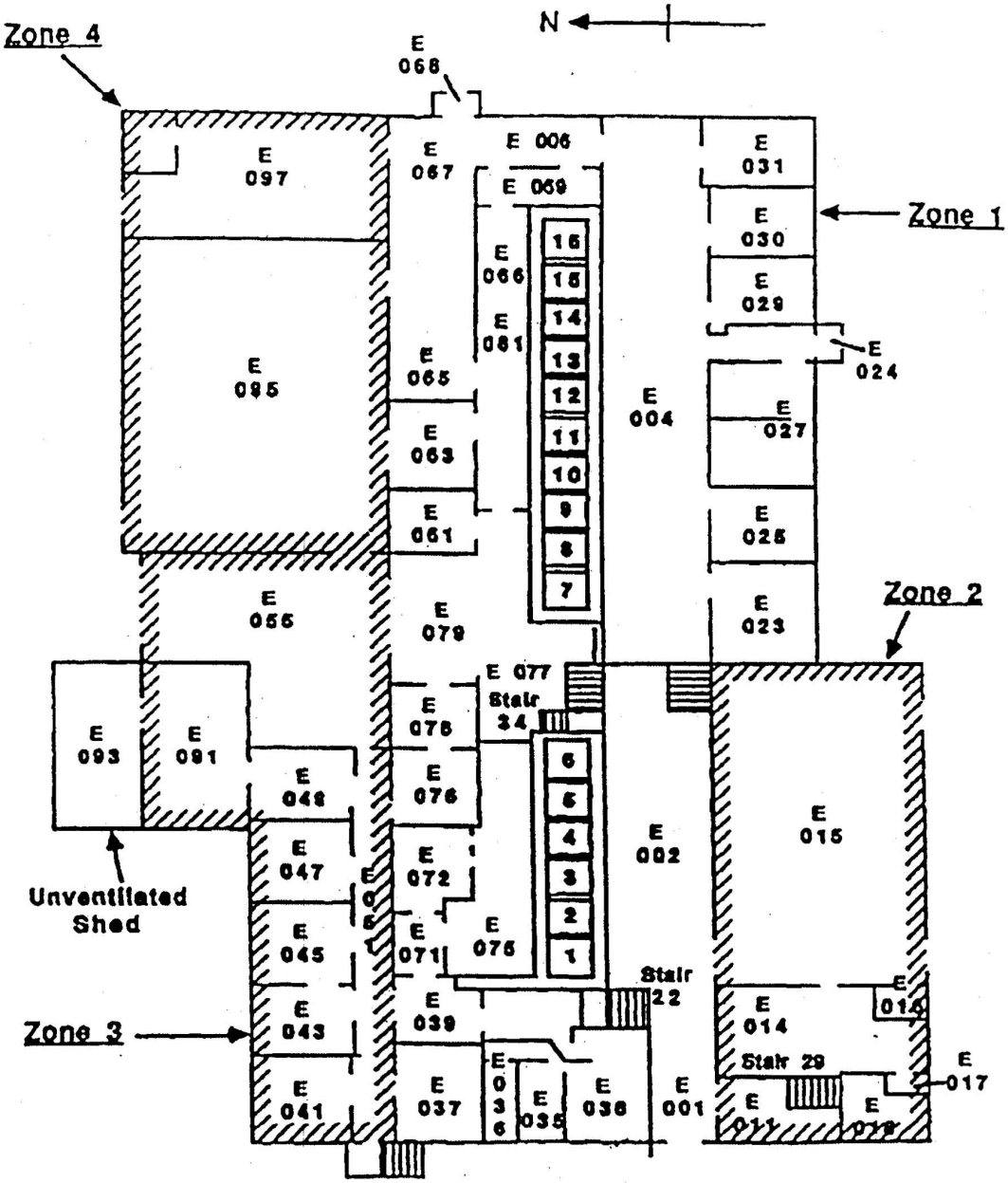

Attachment 1 – Figure L

Building 773-A Ventilation Zones – Section E

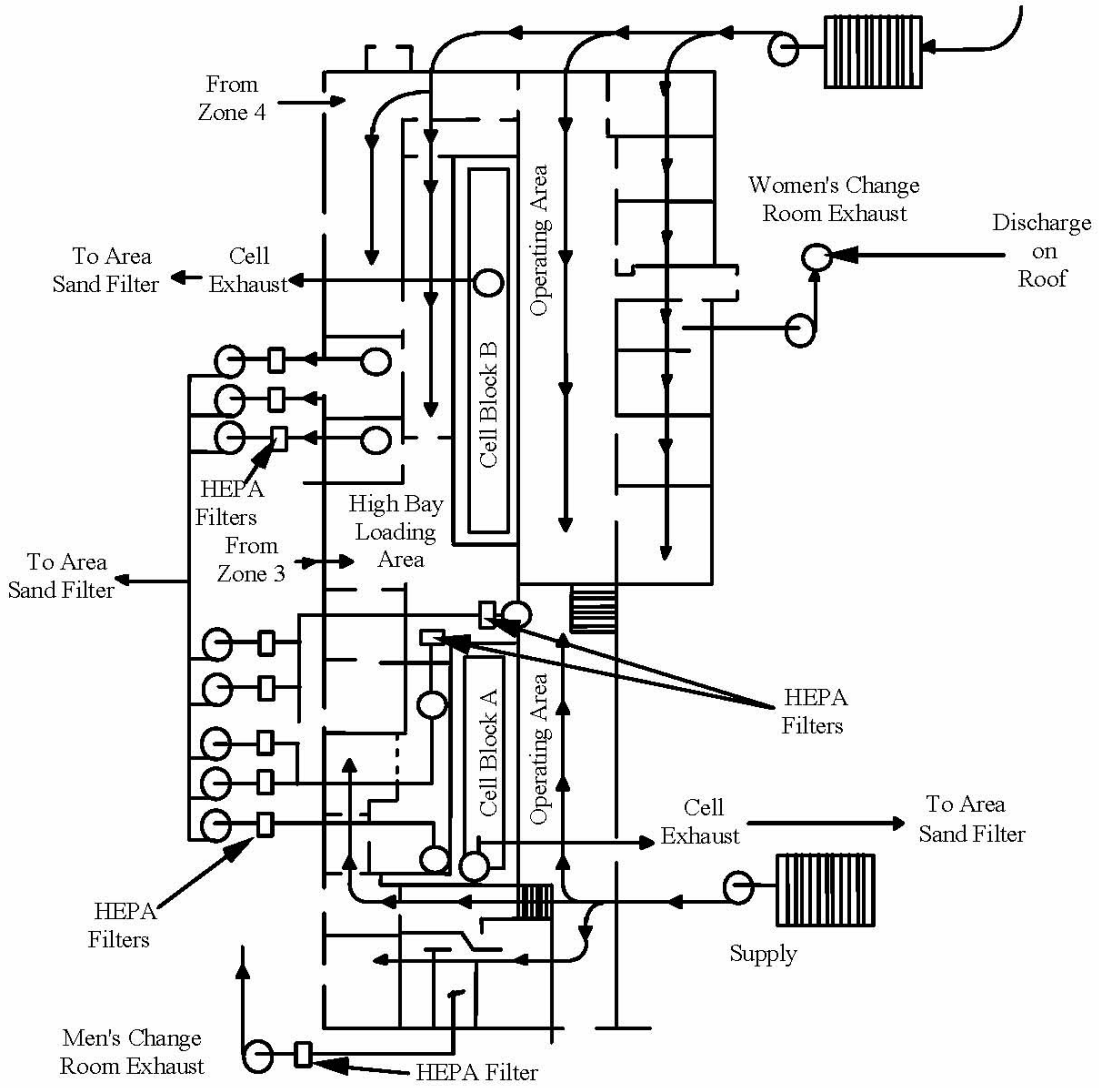

Attachment 1 - Figure M

Building 773-A Zone 1 Service Floor Ventilation - Section E

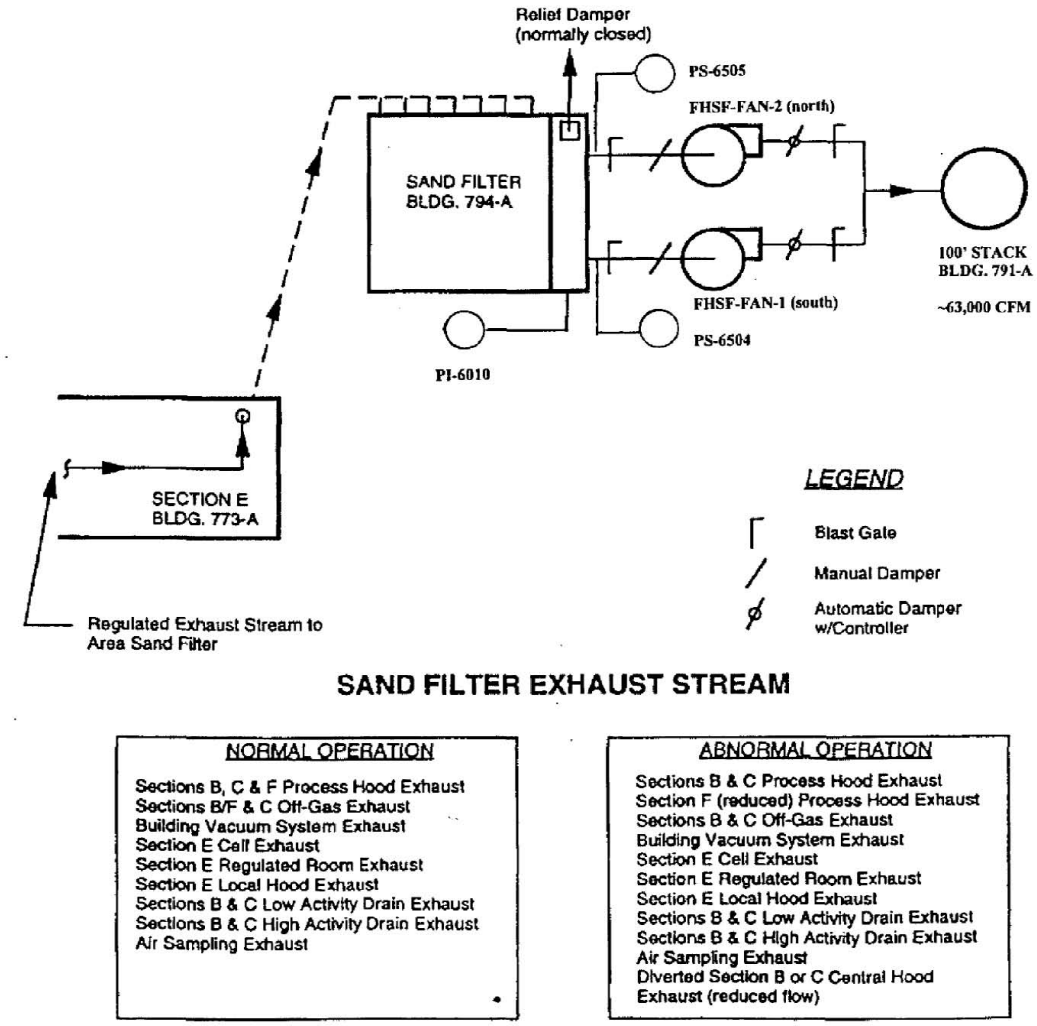

Attachment 1 - Figure N

Sand Filter Flow Diagram

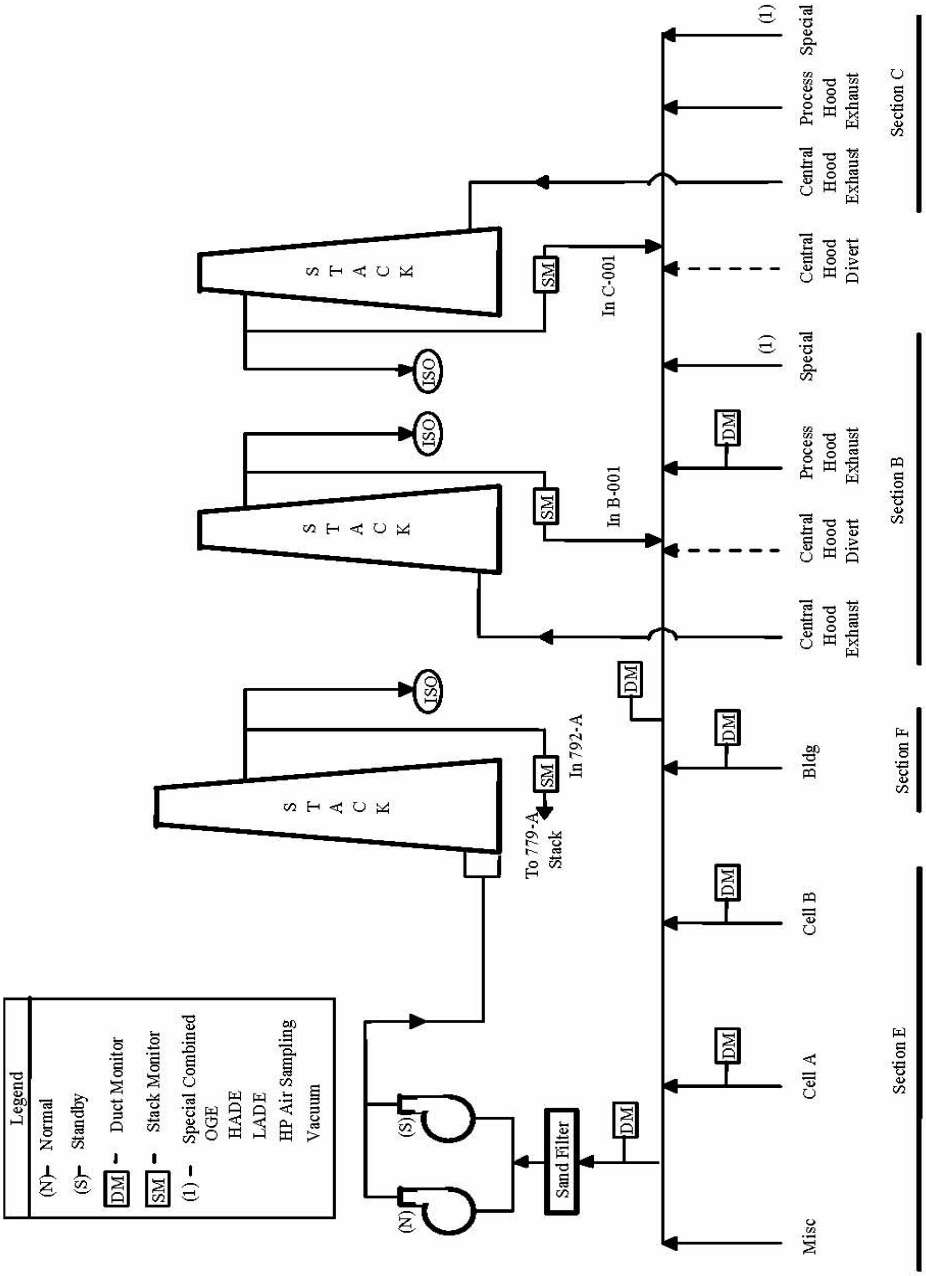

Attachment 1 - Figure O

Schematic Building 773-A Exhausts, Stack Monitor Locations

Attachment 1 – Figure P

Pictorial Representation of Tape-In-Place HEPA Filter Housing

Attachment 2 (Page 1 of 4)

Copy of Table 4-3 Attachment 1 from SRNL-ROE-2007-00063

Table 4-3: Confinement Documented Safety Analysis Information											
Facility = SRNL Building 773-A				Hazard Category 2					Performance Expectations		
Bounding Accidents	Type Confinement		Doses		Confinement Classification			Safety Function	Functional Requirements	Performance Criteria	Compensatory Measures
	Active	Passive	Unmitigated (Notes 1, 6)	Mitigated	SC	SS	DID				
Fire – Fire starting in Room or Laboratory (does not spread beyond initial lab) HA Event C-400b	Not Credited	Not Credited	MOI = 0.21 rem CW = 1.1 rem	NA	NA	NA	NA	NA	NA	NA	NA
Fire – Full building fire HA Event CH-100	Not Credited	Not Credited	MOI = 0.62 rem CW = 3.2 rem	NA	NA	NA	NA	NA	NA	NA	NA
Explosion - Unstable Lab Chemical Explosion in Section B, C or E Laboratory, Section C Intermediate Level Cell (ILC), or Section E High Level Cell (HLC) (Note 2) HA Event E-401a	Not Credited	HL Cell Exhaust, B&C CHEX, B&C PHEX, B/F and C OGE, and F-PHEX. Confinement includes the boundary of Lab module, glovebox, or cell plus the ductwork from the enclosure through (and including) a testable HEPA filter.	MOI = 0.31 rem CW = 1.5 rem	NA	NA	X	NA	The SS classification is based on a qualitative evaluation of postulated accidents that determined that the confinement function provides protection to the in-facility worker.	Confinement of airborne radionuclides to the Lab module, glovebox, or cell where the explosion occurred plus associated ventilation exhaust system ductwork. (Note 3)	Maintain structural integrity during and after a low-energy explosion. Periodic verification of the system testable HEPA filter efficiency to ensure the integrity of the filter as installed.	NA

Attachment 2 (Page 2 of 4)

Copy of Table 4-3 Attachment 1 from SRNL-ROE-2007-00063

Table 4-3: Confinement Documented Safety Analysis Information											
Facility = SRNL Building 773-A				Hazard Category 2					Performance Expectations		
Bounding Accidents	Type Confinement		Doses		Confinement Classification			Safety Function	Functional Requirements	Performance Criteria	Compensatory Measures
	Active	Passive	Unmitigated (Notes 1, 6)	Mitigated	SC	SS	DID				
Explosion – **Glovebox (GB) Overpressurization** (from valve failure) in Non-Section E Room HA Event C-401c	Not Credited	Not Credited	MOI = **1.9 rem** CW = 9.6 rem	NA	NA	NA	NA	NA	NA	NA	NA
Explosion - **FG Explosion from accumulation of process FG (PFG) or VOCs** generated within a HLC, ILC, or GB **followed by a full building fire**. HA Event E-402	Active exhaust systems sweep out PFG or VOCs generated within respective enclosure to prevent explosion from occurring	HLC, ILC, or GB in conjunction with respective active exhaust system plus ductwork from enclosure through (and including) a testable HEPA filter	MOI = **2.2 rem** CW = 10.5 rem	NA	NA	X	NA	The SS classification is based on a qualitative evaluation of postulated accidents that determined that the active function to sweep out PFG and VOCs and the confinement function provide protection to the in-facility worker.	Ventilation exhaust systems are required to be operable prior to, but not during or after, the explosion event. (Note 4)	HLC Cell Exhaust System flow rate must be ≥specified value in TSR LCO. OGE Exhaust System plenum vacuum must be ≥specified value in TSR LCO. HEPA filter efficiency must be ≥specified value in TSR LCO SR.	NA

Attachment 2 (Page 3 of 4)

Copy of Table 4-3 Attachment 1 from SRNL-ROE-2007-00063

Table 4-3: Confinement Documented Safety Analysis Information											
Facility = SRNL Building 773-A				Hazard Category 2					Performance Expectations		
Bounding Accidents	Type Confinement		Doses		Confinement Classification			Safety Function	Functional Requirements	Performance Criteria	Compensatory Measures
	Active	Passive	Unmitigated (Notes 1, 6)	Mitigated	SC	SS	DID				
Explosion – **FG Explosion from accumulation of distributed FG** in non-Section E Room, **followed by full building fire**. HA Event C-402	Active CHEX Systems sweep out distributed FG leaking into FG labs to prevent FG explosion from occurring	Not Credited	MOI = **2.2 rem** CW = 10.8 rem	NA	NA	X	NA	The SS classification is based on a qualitative evaluation of postulated accidents that determined that the active function to sweep out distributed FG provides protection to the in-facility worker.	CHEX Systems are required to be operable prior to, but not during or after, the explosion event. (Notes 4 and 5)	CHEX System plenum vacuum must be ≥specified value in TSR LCO.	NA
Spill – Spill inside Section E shielded cell HA Event E-407	Not Credited	Not Credited	MOI = 0.31 rem CW = 1.5 rem	NA	NA	NA	NA	NA	NA	NA	NA
NPH Event – Earthquake (no consequential fire) HA Event CH-109	Not Credited	Not Credited	MOI = 0.64 rem CW = 3.2 rem	NA	NA	NA	NA	NA	NA	NA	NA

Attachment 2 (Page 4 of 4)

Copy of Table 4-3 Attachment 1 from SRNL-ROE-2007-00063

Table 4-3: Confinement Documented Safety Analysis Information											
Facility = SRNL Building 773-A				Hazard Category 2					Performance Expectations		
Bounding Accidents	Type Confinement		Doses		Confinement Classification			Safety Function	Functional Requirements	Performance Criteria	Compensatory Measures
	Active	Passive	Unmitigated (Notes 1, 6)	Mitigated	SC	SS	DID				
NPH Event – **Earthquake + Consequential Fire + Explosion** HA Event CH-110	Not Credited	Not Credited	MOI = **1.6 rem** CW = 8.1 rem	NA	NA	NA	NA	NA	NA	NA	NA
NPH Event – **Tornado / High Winds** (no consequential fire) HA Event CH-112	Not Credited	Not Credited	MOI = **1.1 rem** CW = 2.7 rem	NA	NA	NA	NA	NA	NA	NA	NA
NPH Event – **Tornado / High Winds + Consequential Fire** HA Event CH-113	Not Credited	Not Credited	MOI = **1.9 rem** CW = 6.6 rem	NA	NA	NA	NA	NA	NA	NA	NA

Notes

1. The accident analysis dose consequences (S-CLC-A-00130, Rev. 0) used 'falling object' ARF*RF values based upon the assumption that the basic concrete structures of Sections B and C of Building 773-A and the Section E Shielded Cells will not collapse during a fire, explosion, or earthquake event. This limits the kinetic energy of falling objects that strike radioactive materials during these events. However, these structures are not credited with any dose reduction function, i.e., LPF = 1.0 in all events.
2. The Unstable Lab Chemical Explosion is a "low-energy" explosion that does not challenge the integrity of the Lab Module or ventilation exhaust system.
3. The HEPA filter forms part of the passive confinement boundary, but is not credited with a dose reduction function. Operation of the exhaust fans is not needed to support this function.
4. The normal status of the exhaust system is that it is operating (i.e., not in standby). The monitoring system must provide an indication of the exhaust flow. If the system becomes inoperative, all operations in the affected enclosures are stopped and hazardous materials and energy sources are put in a stable condition.
5. The CHEX system also has an alarm on degradation / loss of CHEX flow. If the system becomes inoperative, all operations in the affected FG labs are stopped and the distributed FG supply shut off.

MOI – Maximally Exposed Offsite Individual (public) CW – Co-located worker (at 100m)

Attachment 3

Radiological Dose Criteria from Consolidated Hazards Analysis Manual (Reference A)

Consequence Level	Offsite Receptor Consequences (MOI)	Onsite Worker #1 Consequences (Inside the facility)	Onsite Worker #2 Consequences (Outside the facility/CW)
High	Consequences greater than or equal to 25 rem	Consequences greater than or equal to 100 rem	Consequences greater than or equal to 100 rem
Moderate	Consequence greater than or equal to 5 rem and less than 25 rem	Consequences greater than or equal to 25 rem and less than 100 rem	Consequences greater than or equal to 25 rem and less than 100 rem
Low	Consequence greater than or equal to 0.5 rem and less than 5 rem	Consequences greater than or equal to 5 rem and less than 25 rem	Consequences greater than or equal to 5 rem and less than 25 rem
Negligible	Consequences less than Low level	Consequences less than Low level	Consequences less than Low level

Attachment 4

Table 1 - Events Excluded from Evaluation as Part of Table 5-1

Event Category	Basis
Fire – Room or Laboratory only	Per Reference B Page 21 and 22 Discussion, the evaluation of internal fire events for an existing facility is only required if the accident analysis takes credit for the active confinement ventilation system.
Fire – Full Facility	Per Reference B Page 21 and 22 Discussion, the evaluation of internal fire events for an existing facility is only required if the accident analysis takes credit for the active confinement ventilation system.
Explosion – Accumulation of Process Flammable Gas or VOCs followed by a full building fire	Per Reference B Page 21 and 22 Discussion, the evaluation of internal fire events for an existing facility is only required if the accident analysis takes credit for the active confinement ventilation system.
Explosion – Accumulation of Distributed Flammable Gas followed by full building fire	Per Reference B Page 21 and 22 Discussion, the evaluation of internal fire events for an existing facility is only required if the accident analysis takes credit for the active confinement ventilation system.
NPH Event – Earthquake with no consequential fire	Per Reference C Caution 4 and Reference B Page 22 Discussion, the evaluation of seismic events is only required if the accident analysis takes credit for the active confinement ventilation system during or after the NPH event.
NPH Event – Earthquake with consequential fire and explosion	Per Reference C Caution 4 and Reference B Page 22 Discussion, the evaluation of seismic events is only required if the accident analysis takes credit for the active confinement ventilation system during or after the NPH event.
NPH Event – Tornado/High Winds with no consequential fire	Per Reference C Caution 4 and Reference B Pages 22 and 23 Discussion, the evaluation of tornado and wind events is only required if the accident analysis takes credit for the active confinement ventilation system during or after the NPH event.
NPH Event – Tornado/High Winds with consequential fire	Per Reference C Caution 4 and Reference B Pages 22 and 23 Discussion, the evaluation of tornado and wind events is only required if the accident analysis takes credit for the active confinement ventilation system during or after the NPH event.
NPH Event – Flooding and Precipitation	Per Reference C Caution 4 and Reference B Page 23 Discussion, the evaluation of other NPH events is only required if the accident analysis takes credit for the active confinement ventilation system during or after the NPH event.
NPH Event – Lightning with no Fire	Per Reference C Caution 4 and Reference B Page 23 Discussion, the evaluation of other NPH events is only required if the accident analysis takes credit for the active confinement ventilation system during or after the NPH event.
External Events with no Fire	Reference G Tables 3.4-2 and 3.4-4 indicates no release without a consequential fire.

Credible events from the DSA Tables 3.4-2 and 3.4-4 (Reference G) are listed in Attachment 2. The events have been evaluated against the guidance provided in References B and C. Table 1 provides a list of events, and associated basis, that do not need to be evaluated during Table 5-1 Report development.

Attachment 5 (Page 1 of 2)

Justification for Sections and Systems Excluded by 4-3 Report

The evaluation will exclude the following Sections of 773-A. They are:

- Section A (or A Wing) of the building does not have a radioactive material inventory (other than sealed sources), and does not provide a confinement function. The section is segregated from the balance of 773-A with a non-DSA credited 2-hr fire barrier. Therefore, if segmented from the balance of 773-A this section would be considered an Other Industrial Facility.
- Section D (or D Wing) where the inventory (DSA Table 3.4.1-1) is less than Hazard Category 3 limit. The inventory contributes less than 1 mrem to the MOI or co-located worker for the full facility NPH events analyzed in the DSA. The section is segregated from the balance of 773-A with a non-DSA credited 2-hr fire barrier. Therefore, if segmented from the balance of 773-A this section would be considered a Radiological Facility.

The evaluation will exclude the following Systems in 773-A. They are:

- Building Central Vacuum System (VAC) – This system exhausts from 0 to 50 cfm as needed from vacuum ports in lab modules located in 773-A Sections B, C, D and F. The air passes through a HEPA filter before reaching the vacuum pump and is then discharged to the SRNL Sand Filter.
- Low Activity Drain Exhaust (LAD) – Identical systems in Sections B and C provide a forced air sweep through the gravity drain system for low specific activity liquid waste from the lab bench sink and/or floor drain in laboratory modules. 150 cfm is exhausted from each piping system, passes through a HEPA filter before reaching the fan and is then discharged to the SRNL Sand Filter.
- High Activity Drain Exhaust (HAD) – Identical systems in Sections B and C provide a forced air sweep through the gravity drain system for high specific activity liquid waste (lab sample disposal) from laboratory module radiohoods and gloveboxes. The system prevents residual dried contamination in the piping from migrating back into the hoods or gloveboxes. 75 cfm is exhausted from each piping system, passes through a HEPA filter before reaching the fan and is then discharged to the SRNL Sand Filter.

Attachment 5 (Page 2 of 2)

Justification for Sections and Systems Excluded by 4-3 Report

- Air Monitoring/Stack Air Activity Monitoring (AM/SAAM) – Similar systems in Sections B and C provides the motive force for the Retrospective Air Samplers, Duct Monitors, Continuous Air Monitors, Stack Samples and Stack Monitors. Each individual sample flow varies from 1 to 3 cfm with between 300 and 400 sample locations operational at any one time in Sections B, C, D, E and F. The 500 to 1000 cfm is pulled through the filter paper at the various sample points before entering the fans and is then discharged to the SRNL Sand Filter.

The preceding four systems exhaust a maximum of 1500 cfm (SAAM/Air Monitoring – 1000 cfm, Low Activity Drain Exhaust – 300 cfm, High Activity Drain Exhaust – 150 cfm and Vacuum 50 cfm) of the nominal 210,000 cfm exhausted from 773-A Sections B, C, E and F. This exhaust airflow contributes less than 1% of the total exhaust airflow. Failure of any or all of these systems will not adversely impact the facility confinement function due to the small percentage of total facility airflow and the filtration function of the Sand Filter.

Attachment 6 (Page 1 of 3)

Description of Discretionary Gaps Identified in Table 5-1 Evaluation

Gap Number	Eval. Crit. Number	System Name	Description of Discretionary Gap
1	1.3	B/C-CHEX	Ductwork blanks are not provided between all adjacent filter banks.
2	1.3/2.5	B/C-HVAC	Isolation dampers are not provided to isolate individual portions of the supply system.
3	2.2	B/C-CHEX B/C-PHEX B/C-HVAC	Interlocks are not provided between the supply and exhaust systems.
4	8.1	B/C-CHEX B/C-PHEX	Tape-in-place HEPA filters do not meet the filter housing pressure boundary integrity testing requirements in N510. See Attachment 1 Figure P.
5	8.1	B/C-CHEX	Ductwork blanks are not provided between all adjacent filter banks.
6	10.1	B/C-CHEX	Fan Motor Control Centers (MCCs) are fed by the same diesel generator (D/G).
7	10.1	B/C-CHEX	Performance of two of the four Diversion fans is limited by poor fan inlet conditions (system effect).
8	1.4	B/C-HV	The two B/C-HV sub-systems do not have HEPA filtration.
9	2.1/2.4	B/C-HV	The two B/C-HV sub-systems do not have any local or remote system status instrumentation or alarms.
10	2.3	B/C-HV	Emission points from tertiary confinement zone do not have post accident indication of filter break through.
11	10.1	B/C-HV	Two exhaust sub-systems are not provided with redundant fans.
12	10.2	B/C-HV	The two B/C-HV sub-systems fans do not have automatic back-up power.
13	2.1/2.4	B/C-HVAC	The B/C-HVAC systems do not have any remote system status instrumentation, control or alarms.
14	2.1	B/C-HVAC	There is no ΔP measurement between the atmosphere and the tertiary confinement zones.
15	10.1	B/C-PHEX	Fan MCCs are fed by the same D/G.
16	2.2	B/C-RREX	Interlocks are not provided between supply and exhaust systems.
17	10.1	B/C-RREX	Four exhaust sub-systems are not provided with a standby fan.
18	10.2	B/C-RREX	Fans not provided with automatic backup electrical power.
19	2.1	B/C/F-OGE	Not all gloveboxes are provided with outlet HEPA filter ΔP instrumentation.

Attachment 6 (Page 2 of 3)

Description of Discretionary Gaps Identified in Table 5-1 Evaluation

Gap Number	Eval. Crit. Number	System Name	Description of Discretionary Gap
20	2.1	B/C/F-OGE	Not all gloveboxes are provided with exhaust flow rate instrumentation.
21	2.5/10.1	B/C/F-OGE	Failure of online fan does not automatically start the standby fan.
22	10.1	B/C/F-OGE	Fan MCCs are fed by the same D/G.
23	1.4	E-CE	Cell Block B 3rd stage HEPA filter airflow is greater than the filter rating during individual HEPA filter isolation.
24	1.4	E-CE	Cell Block A 2nd stage HEPA filters and Cell Block A 3rd stage HEPA filter airflow is greater than the filter rating during individual HEPA filter isolation.
25	2.1	E-CE	Cell Block A 2nd Stage HEPA Filters, Cell Block A 3rd stage HEPA filters and Cell Block B 3rd Stage HEPA filters are not provided with differential pressure indicators.
26	2.2	E-CE E-HVAC E-RREX E-LHEX	Interlocks are not provided between the supply and exhaust systems.
27	10.1	E-CE	The two sub-systems are powered from the same MCC, fed by the same D/G.
28	1.4	E-HV	The Women's Change Room Exhaust sub-system exhaust does not have HEPA filtration before being released to the environment.
29	2.1	E-HV	The two sub-systems do not have any local or remote system status instrumentation or alarms.
30	2.3	E-HV	Emission points from tertiary confinement zone do not have post accident indication of filter break through.
31	10.1	E-HV	The two sub-systems do not have redundant fans.
32	10.2	E-HV	The two sub-systems fans do not have automatic back-up power.
33	1.4	E-HVAC	The manipulator shop, a secondary zone, uses re-circulated air without HEPA filtration.
34	2.1	E-HVAC	The systems do not have any remote system status instrumentation, control or alarms.
35	1.4	E-LHEX	High Bay Exhaust sub-system airflow exceeds HEPA filter rated capacity.
36	8.1	E-LHEX	Tape-in-place HEPA filters do not meet the filter housing pressure boundary integrity testing requirements in N510. See Attachment 1 Figure P.
37	10.1	E-LHEX	The Hood Exhaust sub-system does not have redundant fans.

Attachment 6 (Page 3 of 3)

Description of Discretionary Gaps Identified in Table 5-1 Evaluation

Gap Number	Eval. Crit. Number	System Name	Description of Discretionary Gap
38	10.2	E-LHEX	Automatic backup electrical power is not provided for the following E-LHEX sub-systems: High Bay Exhaust and Hood Exhaust.
39	1.4	E-RREX	Two locations have airflow greater than the rated capacity of the HEPA filter.
40	2.1	E-RREX	HEPA filters are not provided with ΔP instrumentation for the Lab and Storage Exhaust sub-system.
41	2.1	E-RREX	The Fan Room Exhaust sub-system does not have any status instrumentation or alarms.
42	8.1	E-RREX	Tape-in-place HEPA filters do not meet the filter housing pressure boundary integrity testing requirements in N510. See Attachment 1 Figure P.
43	10.1	E-RREX	The Fan Room Exhaust sub-system does not have redundant fans.
44	10.2	E-RREX	Automatic backup electrical power is not provided for the following sub-systems: High Bay Exhaust, Lab & Storage Exhaust and Fan Room Exhaust.
45	2.1	F-LHEX	HEPA filters are not provided with ΔP instrumentation.
46	2.1	F-LHEX	The system does not have any status instrumentation or alarms.
47	2.3	F-LHEX	Emission point from tertiary confinement zone does not have post accident indication of filter break through.
48	10.1	F-LHEX	Failure of online fan does not automatically start the standby fan.
49	10.1	F-LHEX	Fans are provided standby power from the same Motor Control Center.
50	2.1	F-PHEX	For CPF and MSF, Cell ΔP is not monitored.
51	2.1	F-PHEX	For four gloveboxes, outlet HEPA filters are not provided with ΔP instrumentation.
52	2.1	F-PHEX	For CPF and MSF, the outlet HEPA filters are not provided with ΔP instrumentation.
53	2.5	F-PHEX	The exhaust fan inlet dampers do not fail safe.
54	8.1	F-PHEX	The MSF tape-in-place HEPA filters do not meet the filter housing pressure boundary integrity testing requirements in N510. See Attachment 1 Figure P.
55	10.1	F-PHEX	Fan MCCs are not distributed across different D/Gs.
56	10.1	FHSF	Fan MCCs are not distributed across different D/Gs.
57	10.2	FHSF	Standby power is not provided for the stack air activity monitoring (SAAM) fans.
58	10.1	CE	Controls for each sub-system redundant fans are powered by a single control transformer.

Attachment 7

2004-2 Table 5-1 Ventilation System Performance Evaluation
SRNL, Building 773-A

System	Page
B/C-CHEX	A7-2
B/C–HV	A7-24
B/C–HVAC	A7-37
B/C/F–OGE	A7-52
B/C–PHEX	A7-68
B/C–RREX	A7-84
E-CE	A7-100
E–RREX	A7-120
E–HVAC	A7-139
E–LHEX	A7-154
E–HV	A7-172
F-PHEX	A7-187
F–LHEX	A7-205
F-HVAC	A7-221
FHSF	A7-235

Evaluation Criteria	Discussion	Reference
0 - Ventilation System Description & References		
0.1 System Description	N/A	N/A
	System Description The Central Hood Exhaust (CHEX) systems are two independent systems serving Sections B&C with about 30 lab modules in each section. Separate single stage HEPA filter banks serve individual or groups of lab modules. Three of four exhaust fans on-line is the normal operating configuration (Figure A). Air is discharged to a 75 ft stack for each section of the building. In the event of a loss of power, the system reduces to one exhaust fan provided with standby power. In the event of a significant stack release, the normal exhaust fans can be shutdown and a booster fan (with standby) can be started to "divert" reduced airflow to the SRNL Sand Filter. The booster "diversion" fans are provided with standby power. The stack, building framing, roof slabs and floor slabs have been qualified to PC-3. The building shell walls (windows and transite panels) have been qualified to PC-1. Interior partitions, systems and components are qualified to a mixture of PC-1 and PC-2.	

Evaluation Criteria	Discussion	Reference
0.2 System References	N/A	N/A

Standards
- o DuPont Specifications 3027, 3017, 8728.
- o DuPont standard H16J, Flexible connections
- o M-SPP-G-00243, HEPA Filter Specification
- o SRS Engineering Standard 15888, HEPA Filter Requirements
- o ANSI/ASME NQA-1, Quality Assurance Program Requirements for Nuclear Facilities, 1997
- o DOE-STD-3020-2005, DOE Technical Standard - Specification for HEPA Filters Used by DOE Contractors
- o DOE-STD-3025-2007, DOE Technical Standard - Quality Assurance Inspection and Testing of HEPA Filters
- o UL 586, UL Standard for Safety, High Efficiency, Particulate, Air Filter Units, 1996.

References

System Design Descriptions (SDDs):
- o M-SYD-A-00001, CHEX System Design Description
- o M-SYD-A-00016, CHEX Diversion System Design Description
- o M-SYD-A-00024, IA, PLTA & Compressor Alternate CW

Air Balance Test Procedures (TPs):
- o TP-02-773A-BWING-01, Sec B Air Balance Test Procedure
- o TP-03-773A-CWING-01, Sec C Air Balance Test Procedure
- o 5Q1.2 Procedure 484, Building Air Survey

Operator Round Sheets:
- o ROD-OPS-2002-002 - Control Area Operator (CAO) Round Sheets
- o ROD-OPS-2002-003 - Facility Operator (FO) Round Sheets

Miscellaneous
- o SRNL-ESD-2007-00017, Structural Integrity Program Scope, Resources & Estimate, 02/07/07
- o SRNL-ROE-2007-00063, Table 4.3 submittal
- o WSRC-SA-2, Revision 3, February 2007, SRNL Technical Area Documented Safety Analysis (DSA)
- o WSRC-TS-97-00014, SRNL Technical Area (TA) Technical Safety Requirements (TSRs)

Drawings
- o M-M6-A-0183, CHEX Normal Exhaust Fan P&ID - Section B
- o M-M6-A-0170, CHEX Normal Exhaust Fan P&ID - Section C
- o M-M6-A-0191, CHEX Diversion Exhaust Fan P&ID - Section B
- o M-M6-A-0192, CHEX Diversion Exhaust Fan P&ID - Section C

Evaluation Criteria	Discussion	Reference
1 - Ventilation System – General Criteria		
1.1 Pressure differential should be maintained between zones and atmosphere.	Number of zones as credited by accident analysis to control hazardous material release; demonstrate by use considering potential in-leakage.	DOE-HDBK-1169 (2.2.9) ASHRAE Design Guide
	The Sections B&C zone flows and ventilation system interactions are described in the specific SDD documents (see references in Section 0.2). Differential pressures (DPs) are not measured directly, but are maintained between zones by monitoring and balancing air flows. Periodic monitoring is conducted, including hood face velocities (Procedure 4Q/401) and air flow directions (Procedure 5Q1.2/484). Air balances are regularly conducted on all ventilation systems within a building section to verify facility design basis flows, as documented by the Sections B&C Air Balance test procedures (see references in Section 0.2). Key system parameters are recorded on a daily and weekly basis (operator rounds in Section 0.2) which allows monitoring of ventilation system function and performance. The CHEX/Diversion Systems are designed to maintain the primary containment zones at a negative pressure with respect to surrounding areas such that a positive airflow is maintained into the primary confinement zones from the secondary confinement zones. Confinement Zones o Primary Confinement — Lab Hoods / Gloveboxes / Ducting through 1st testable HEPA filter stage o Secondary Confinement — Labs / Filter Rooms / Equipment Rooms / Service Corridor o Tertiary Confinement — Personnel Corridors / Offices / General Service Floor Area o Administrative Area — Sections A&D / Offices <u>Gap Analysis</u> No Gaps - Pressure differentials are not measured directly, but are maintained between zones by monitoring and balancing air flows.	

Evaluation Criteria	Discussion	Reference
1.2 Materials of construction should be appropriate for normal, abnormal and accident conditions.	[DOE Guidance Document does not provide any specific evaluation guidance discussion for this criteria]	DOE-HDBK-1169 (2.2.5) ASME AG-1
	CHEX (Normal Exhaust) Systems Sections B&C CHEX systems transport noxious fumes, as well as radioactive contamination from laboratories to the shielded area (filter room). Ducting is Level 4, class II. Ducting is welded from 16 gauge 304 stainless steel with bolted, flanged joints Joints are connected with 1/8" thick full face neoprene gaskets. Ducting from lab modules connects to the primary filter ("dirty") plenum which supplies parallel HEPA filter assemblies. Filter assembly housings and framework are fabricated from stainless steel and discharge to a secondary filter ("clean") plenum. The secondary filter plenum discharges to an underground plenum constructed of reinforced concrete and lined with Amercoat panels. The underground plenum extends from the filter room to the equipment room where the CHEX fans connect to it and then discharge to the building stack. The stack is concrete with a chemical resistant coating. CHEX fans are epoxy coated steel. Flexible connections are neoprene fabric collars over stainless steel spool pieces. CHEX (Diversion Exhaust) Systems Sections B&C CHEX Diversion systems reroute exhaust air from the CHEX systems to the Fan Housing Sand Filter (FHSF) supply duct when B or C stack monitoring systems detect radioactivity above predetermined levels. The CHEX Diversion system ducting is stainless steel. CHEX Diversion system fans are fabricated from carbon steel. <u>Gap Analysis</u> No Gaps - All materials of construction are appropriate for normal, abnormal and accident conditions. Inspections conducted as part of the Structural Integrity Program on the inside of the Sections B&C HEPA ductwork to date have shown no reasons why the ventilation system cannot perform it's intended function during all conditions.	

Evaluation Criteria	Discussion	Reference
1.3 Exhaust system should withstand anticipated normal, abnormal and accident system conditions and maintain confinement integrity.	As required by accident analysis to prevent accident release.	DOE-HDBK-1169 (2.4) ASHRAE Design Guide
	The 773-A Building ventilation system consists of intake and exhaust ducting, dampers, fans, filters banks, associated controls and instrumentation. The 773-A Building ventilation system minimizes the potential release of radioactive contamination in the event of a process leak. The ventilation system is designed to maintain the building at a slight negative pressure with respect to its surrounding. The CHEX systems, along with OGE and PHEX, are designed to maintain the primary containment zones at a negative pressure with respect to surrounding areas such that a positive airflow is maintained into the primary confinement zones from the secondary confinement zones and into the secondary confinement zones from the tertiary confinement zones. During normal operation these multiple systems run continuously within defined performance parameters to maintain the proper containment air flow. All exhaust air flows except HV systems are filtered through HEPA filters. The PHEX, OGE, and CHEX (Diversion Exhaust) systems exhaust to the Sand Filter (FHSF) system. The ventilation system components are adequate for normal and most abnormal operation. Abnormal conditions include power failure, partial shutdown, or activation of the CHEX (Diversion Exhaust) system. In the event of a power failure, conditioned air will be supplied to tertiary confinement zones only. All supply systems receiving outside air have freezestats to automatically shut the fans down to prevent component damage due to freezing temperatures. Office and laboratory supply fans share a common outside inlet and windbox. Supply air (HVAC) fans that supply laboratory spaces have automatic dampers on the fan discharge that close if the fan is de-energized to prevent the possibility of the backflow of air from the laboratories to the inlet of the office supply fans. Partial shutdown of ventilation systems is addressed by operating procedures TO-06-011, Reduction/Restoration of C Section CHEX and TO-06-015, Reduction/Restoration of B Section CHEX. Activation of the CHEX Diversion system shuts down approximately 2/3rds of the Sections B&C supply air (HVAC) fans to insure that the facility air balance is maintained. The following accident scenarios are considered. Process Explosion - Unstable Lab Chemical or Accumulation of Process Flammable Gas or VOCs with no consequential fire - Ventilation systems would operate normally to maintain a positive pressure differential into the effected lab. Exhaust flows through HEPA filtration are believed adequate to contain mobilized contaminants. If the HEPA plugs, the contaminants would be contained within the lab and ductwork. If the HEPA is compromised and contamination is detected in the B or C stack, the CHEX Diversion system would be placed in service to direct exhaust air to the Sand Filter. If a filter housing or ducting is compromised, the RREX (Exhaust) systems would contain the contamination. Fire detection systems would alert Control Room Operators who would shut down ventilation systems according to procedures. Lab/Cell walls, Gloveboxes, and ductwork would passively contain contaminants. Explosion - Glovebox Overpressurization - same as above. Explosion - Accumulation of Distributed Flammable Gas with no consequential fire - same as above. Drop / Spill - Ventilation systems would operate normally to draw lab/cell air towards hoods. Normal room infiltration would contain the spill to the effected lab/cell. Exhaust flows through HEPA filtration are believed adequate to contain mobilized contaminants. If the HEPA plugs, the contaminants would be contained within the lab and ductwork. If the HEPA is	

Evaluation Criteria	Discussion	Reference
	compromised and contamination is detected in the B or C stack, the Diversion system would be placed in service to direct exhaust air to the Sand Filter. If filter housings or ducting are compromised, the RREX systems would contain the contamination. <u>Gap Analysis</u> Gap Number 1: Discretionary Gap - Ductwork blanks are not provided between all adjacent filter banks.	

Evaluation Criteria	Discussion	Reference
1.4 Confinement ventilation systems shall have appropriate filtration to minimize release.	Address: 1) Type of filter (e.g., HEPA, sand, sintered metal); 2) Filter sizing (flow capacity and pressure drop); 3) Decontamination Factor vs. accident analysis assumptions.	ASME AG-1 DOE-HDBK-1169 (2.2.1)
	CHEX (Normal Exhaust) Systems Separate Sections B&C CHEX systems utilize parallel banks of one pre-filter and either one or two HEPA filters in series. Both "slide in/tape in place" and "bag-in/bag-out" configurations are used. Section B also has two nonstandard cabinet housings. Filters used are listed below. A review of air balance data indicates that all HEPA filters are properly sized. Prior to receipt the filters are tested at the Independent Filter Testing Facility (FTF) to confirm an efficiency of at least 99.97% for a decontamination factor DF = 3333. Decontamination factor has not been considered in the facility DSA. The filters are credited with confinement function only, not dose reduction. HEPA Filters "slide in/tape in place" - 24x30x11-1/2, 1250 cfm @ 1.0 in wc, plywood frame, back neoprene gasket , Stores code 32.1850.04, Flanders Filters Drawing Z95295, Rev. B "bag-in/bag-out" - 24x24x11-1/2, 1500 cfm @ 1.3 in wc, plywood frame, upstream fluid seal, stores code 32.1729.03 or 32.5763.01, Flanders Filters Drawing F0202587, Rev. B nonstandard - 24x30x11-1/2, 1250 cfm @ 1.0 in wc, plywood frame, upstream neoprene gasket, special Flanders Filter, Sec B Prefilters - "bag-in/bag-out" - 24x24x2 (stores code 50.16278), Am Filter 301 or Farr Co 30/30 Class 1 "slide in/tape in place" - 20x25x2 (stores code 50.16130), Am Filter 301 or Farr Co 30/30 Class 1 <u>Gap Analysis</u> No Gaps CHEX (Diversion Exhaust) Systems Separate Sections B&C Diversion Exhaust systems connect to the exhaust plenum after filtration. The additional filtration is provide by the SRNL Sand Filter which is evaluated in a separate report. <u>Gap Analysis</u> No Gaps	

Evaluation Criteria	Discussion	Reference
2 - Ventilation System – Instrumentation & Control		
2.1 Provide system status instrumentation and/or alarms.	Address key information to ensure system operability (e.g., system delta-P, filter pressure drop).	ASME AG-1 DOE-HDBK-1169 ASHRAE Design Guide (Section 4)
	CHEX (Exhaust) Systems The Sections B&C CHEX systems (four fans per section) are instrumented on the Process Suite Vision (PSV) control system in the C041 CR to show fan status on two separate screens. All of the fan alarms and HEPA filter DP (high and low) indications are routed to the CR. The Section B abnormal DPs are displayed per HEPA bank, while the Section C abnormal DPs are displayed by quadrant (per eight HEPA banks). <u>Gap Analysis</u> No Gaps CHEX (Diversion Exhaust) Systems The Sections B&C CHEX diversion exhaust systems (two fans per section) are instrumented on the PSV control system in the C041 CR to show fan status, as well as on the cabinet status boards (#2 for B, #5 for C). All of the fan alarms associated with diversion are also routed to the CR. <u>Gap Analysis</u> No Gaps	
2.2 Interlock supply and exhaust fans to prevent positive pressure differential.	[DOE Guidance Document does not provide any specific evaluation guidance discussion for this criteria]	DOE-HDBK-1169 ASHRAE Design Guide (Section 4)
	Supply and exhaust fans are not interlocked. CHEX (Normal Exhaust) Systems The Sections B&C CHEX normal exhaust fans (four per section) are not interlocked with their HVAC supply fan counterparts to prevent positive DPs. <u>Gap Analysis</u> Gap Number 3: Discretionary Gap - Interlocks are not provided between the supply and exhaust systems. CHEX (Diversion Exhaust) Systems The Sections B&C CHEX Diversion exhaust fans (two per section) are used during upset conditions, and once activated, selected HVAC supply units in Sections B, C & F are automatically shut down to minimize positive DPs. <u>Gap Analysis</u> No Gaps - CHEX (Diversion Exhaust) interlocks are already provided to prevent positive DPs.	

Evaluation Criteria	Discussion	Reference
2.3 Post accident indication of filter break-through.	Instrumentation supports post accident planning and response; should be considered critical instrumentation for SC.	TECH-34
	CHEX (Normal Exhaust) Systems Sections B&C CHEX (Normal Exhaust) systems have both low HEPA filter DP indicators, indicating breakthrough, and stack activity monitoring. Separate B&C Stack Monitoring systems are in place to detect radioactivity above preset conditions. <u>Gap Analysis</u> No Gaps CHEX (Diversion Exhaust) Systems The Sections B&C CHEX (Diversion Exhaust) systems do not involve HEPA filters, but are designed for post accident mitigation. The Sand Filter Stack is equipped with an isokinetic sampling system to continuously monitor exhaust air flow and activity. <u>Gap Analysis</u> No Gaps - The Sections B&C CHEX (Diversion Exhaust) systems offer post accident mitigating options should HEPA filter breakthrough and/or high stack activity be determined.	

Evaluation Criteria	Discussion	Reference
2.4 Reliability of control system to maintain confinement function under normal, abnormal and accident conditions.	Address, for example, impacts of potential common mode failures from events that would require active confinement function.	DOE-HDBK-1169 (2.4)
	The reliability of the ventilation systems during normal operation is addressed by the TSR, operating procedures, and fail safe design. CHEX (Normal Exhaust) Systems Sections B&C each contain four parallel CHEX fans. Normally three fans are running and one fan is in standby. In the event of a power failure, standby power is supplied to all CHEX fans. One fan in each section will restart automatically and the other fans can be restarted manually. Partial shutdown of ventilation systems is addressed by operating procedures TO-06-011, Reduction/Restoration of C Section CHEX and TO-06-015, Reduction/Restoration of B Section CHEX. The Diversion systems for B and C Sections each include two parallel Diversion fans. One Diversion fan is available and the second fan is in standby. If the Diversion system is activated, the CHEX fans for the affected section are shut down automatically. The Sections B&C CHEX (Normal Exhaust) system fans are continuously monitored by Operations personnel in the Control Room. System is capable of being controlled manually at each fan if necessary. Operation of the systems is controlled by operating procedures. System control is maintained during abnormal and accident conditions by AOPs and EOPs. <u>Gap Analysis</u> No Gaps - PSV control system for the Section B&C CHEX (Normal Exhaust) systems, along with standby and backup power supplies, maintain confinement. CHEX (Diversion Exhaust) Systems If the primary Diversion fan fails the standby fan is automatically energized. Only one Diversion system can operate at a time. The Sections B&C CHEX (Diversion Exhaust) system fans only operate during abnormal and accident conditions. They are controlled manually with standby power backup on the Process Suite Vision (PSV) control system in the C041 CR. Under the four accident scenarios, the CHEX systems would function normally. <u>Gap Analysis</u> No Gaps - The Sections B&C CHEX (Diversion Exhaust) systems are designed for abnormal and accident conditions by operating procedures.	

Evaluation Criteria	Discussion	Reference
2.5 Control components should fail safe.	[DOE Guidance Document does not provide any specific evaluation guidance discussion for this criteria]	DOE-HDBK-1169 (2.4)
	CHEX (Normal Exhaust) Systems The Sections B&C CHEX exhaust system fans have discharge dampers that consistently fail open on loss of instrument air and fail closed on loss of power. CHEX (Diversion Exhaust) Systems The Sections B&C CHEX diversion exhaust system fans have discharge dampers that fail closed on loss of power or instrument air, and diversion dampers that fail closed on loss of power and in last position on loss of instrument air. <u>Gap Analysis</u> No Gaps - CHEX (Normal & Diversion Exhaust) control components are fail-safe.	

Evaluation Criteria	Discussion	Reference
3 - Resistance to Internal Events – Fire		
3.1 Confinement ventilation systems should withstand credible fire events and be available to operate and maintain confinement.	Required for new facilities; as required by the accident analysis for existing facilities (discretionary). Must address protection of filter media.	DOE-HDBK-1169 (10.1) DOE-STD-1066
	As discussed in Table 4-3 transmittal letter SRNL-ROE-2007-00063, Attachment 4, Table 1, this evaluation criteria is NOT APPLICABLE. Per Ventilation System Evaluation Guidance for Safety-Related and Non-Safety Related Systems, Revision 0, January 2006, Page 21 and 22 Discussion, the evaluation of internal fire events for an existing facility is only required if the accident analysis takes credit for the active confinement ventilation system.	
3.2 Confinement ventilation systems should not propagate spread of fire.	Required for new facilities; as required by the accident analysis for existing facilities (discretionary). Address fire barriers, fire dampers arrangement.	DOE-HDBK-1169 (10.1) DOE-STD-1066
	As discussed in Table 4-3 transmittal letter SRNL-ROE-2007-00063, Attachment 4, Table 1, this evaluation criteria is NOT APPLICABLE. Per Ventilation System Evaluation Guidance for Safety-Related and Non-Safety Related Systems, Revision 0, January 2006, Page 21 and 22 Discussion, the evaluation of internal fire events for an existing facility is only required if the accident analysis takes credit for the active confinement ventilation system.	

Evaluation Criteria	Discussion	Reference
4 - Resistance to External Events – Natural Phenomena – Seismic		
4.1 Confinement ventilation systems should safely withstand earthquakes.	If the active CVS system is not credited in a seismic accident condition there is no need to evaluate that performance and/or design attribute for the confinement ventilation system (discretionary). Also, any seismic impact on the confinement ventilation system performance will be based on the current functional requirements in the DSA. NOTE: Seismic requirements may apply to Defense-in-Depth items indirectly for the protection of safety SSCs.	ASME AG-1 (AA) DOE O 420.1B DOE-HDBK-1169 (9.2)
	As discussed in Table 4-3 transmittal letter SRNL-ROE-2007-00063, Attachment 4, Table 1, this evaluation criteria is NOT APPLICABLE. Per 2004-2 Ventilation System Evaluation Guidance Addendum, March 6, 2007, Caution 4 and Ventilation System Evaluation Guidance for Safety-Related and Non-Safety Related Systems, Revision 0, January 2006, Page 22 Discussion, the evaluation of seismic events is only required if the accident analysis takes credit for the active confinement ventilation system during or after the NPH event.	

Evaluation Criteria	Discussion	Reference
5 - Resistance to External Events – Natural Phenomena – Tornado/Wind		
5.1 Confinement ventilation systems should safely withstand tornado depressurization.	If the active CVS is not credited in a tornado condition there is no need to evaluate that performance and/or design attribute for the confinement ventilation system (discretionary). Also, any tornado impact on the confinement ventilation system performance will be based on the current functional requirements in the DSA.	DOE O 420.1B DOE-HDBK-1169 (9.2)
	As discussed in Table 4-3 transmittal letter SRNL-ROE-2007-00063, Attachment 4, Table 1, this evaluation criteria is NOT APPLICABLE. Per 2004-2 Ventilation System Evaluation Guidance Addendum, March 6, 2007, Caution 4 and Ventilation System Evaluation Guidance for Safety-Related and Non-Safety Related Systems, Revision 0, January 2006, Pages 22 and 23 Discussion, the evaluation of tornado and wind events is only required if the accident analysis takes credit for the active confinement ventilation system during or after the NPH event.	
5.2 Confinement ventilation systems should withstand design wind effects on system performance.	If the active CVS is not credited in a wind condition there is no need to evaluate that performance and/or design attribute for the confinement ventilation system (discretionary). Also, any wind impact on the confinement ventilation system performance will be based on the current NP analysis in the DSA.	DOE O 420.1B DOE-HDBK-1169 (9.2)
	As discussed in Table 4-3 transmittal letter SRNL-ROE-2007-00063, Attachment 4, Table 1, this evaluation criteria is NOT APPLICABLE. Per 2004-2 Ventilation System Evaluation Guidance Addendum, March 6, 2007, Caution 4 and Ventilation System Evaluation Guidance for Safety-Related and Non-Safety Related Systems, Revision 0, January 2006, Pages 22 and 23 Discussion, the evaluation of tornado and wind events is only required if the accident analysis takes credit for the active confinement ventilation system during or after the NPH event.	

Evaluation Criteria	Discussion	Reference
6 - Other NP Events (eg. flooding, precipitation)		
6.1 Confinement ventilation system should withstand other NP events considered credible in the DSA where the confinement ventilation system is credited.	If the active confinement ventilation system is not credited for this event there is no need to evaluate that performance and/or design attribute for the confinement ventilation system (discretionary). Also, any impact on the confinement ventilation system performance will be based on the current NP analysis in the DSA.	DOE O 420.1B DOE-HDBK-1169 (9.2)
	As discussed in Table 4-3 transmittal letter SRNL-ROE-2007-00063, Attachment 4, Table 1, this evaluation criteria is NOT APPLICABLE. Per 2004-2 Ventilation System Evaluation Guidance Addendum, March 6, 2007, Caution 4 and Ventilation System Evaluation Guidance for Safety-Related and Non-Safety Related Systems, Revision 0, January 2006, Page 23 Discussion, the evaluation of other NPH events is only required if the accident analysis takes credit for the active confinement ventilation system during or after the NPH event.	

Evaluation Criteria	Discussion	Reference
7 - Range Fires / Dust Storms		
7.1 Administrative controls should be established to protect confinement ventilation systems from barrier threatening events.	Ensure appropriately thought out response to external threat is defined (e.g. pre-fire plan).	DOE O 420.1B
	The Savannah River Forestry Department is responsible for fire fighting efforts in regards to wildland fires. They also have a program of controlled burns and mechanical thinning of underbrush to limit or prevent wildland fires from spreading out of control. If the fire encroaches upon SRNL, the Savannah River Site Fire Department will direct extinguishing efforts. Building 773-A has a current Fire Pre Plan and has procedures to reduce confinement ventilation system air flow (originally developed for electrical system maintenance) that will minimize soot loading of the filters in the ventilation systems. Reference: AOP-06-007 <u>Gap Analysis</u> No Gaps - Administrative controls are sufficient to protect the confinement ventilation systems from barrier threatening events.	

Evaluation Criteria	Discussion	Reference
8 - Testability		
8.1 Design supports the periodic inspection and testing of filters and housing, and test and inspections are conducted periodically.	Ability to test for leakage per intent of N510.	DOE-HDBK-1169 (2.3.8) ASME AG-1 ASME N510
	Surveillance Requirements for the CHEX HEPA filters are specified in the SRNL TSR, WSRC-TS-97-00014, CHEX SR 4.2.2.3. All HEPA filter housings have the capability for in-place testing. This in-place test capability was added in the 1960's and testing points meet the intent of N510. The design of the tape-in-place housings discussed under Criteria 1.4 provides unique challenges in testing filter housing pressure boundary integrity. When the filter banks for multiple labs are manifolded together, the configuration does not ensure uniformity of aerosol challenge. Inspection of the housings is part of the Structural Integrity Program. The system is assessed for material buildup following a process event. CHEX (Normal Exhaust) Systems B&C CHEX (Normal Exhaust) HEPA filters are tested annually to verify that they have an efficiency of greater or equal to 99.5%. <u>Gap Analysis</u> Gap Number 4: Discretionary Gap - Tape-in-place HEPA filters do not meet the filter housing pressure boundary integrity testing requirements in N510. Gap Number 5: Discretionary Gap - Ductwork blanks are not provided between all adjacent filter banks. CHEX (Diversion Exhaust) Systems Separate Section B&C CHEX (Diversion Exhaust) have no filtration. <u>Gap Analysis</u> No Gaps	

Evaluation Criteria	Discussion	Reference
8.2 Instrumentation required to support system operability is calibrated.	Credited instrumentation should have specified calibration / surveillance requirements. Non-safety instrumentation should be calibrated as necessary to support system functionality.	DOE-HDBK-1169 (2.3.8)
	Surveillance Requirements for the CHEX systems are specified in the SRNL TA TSRs (WSRC-TS-97-00014) and included in the CHEX system SDD (M-SYD-A-00001) The Sections B&C CHEX (Normal Exhaust) system monitoring and control components, such as gauges, pressure switches and relays, as well as associated instrument loops, are calibrated on a 18 month frequency for the SS TSR components (6524 loop for B, 6525 loop for C) and on a 36 month frequency for the GS non-TSR components. The Sections B&C CHEX (Diversion Exhaust) system instrumentation and interlock components, such as pressure switches and relays, and associated loops, are calibrated on a 18 month frequency. The pneumatic control calibration is performed in accordance with procedure TE-48-039. Other non-safety instrumentation is calibrated on an as-needed basis. <u>Gap Analysis</u> No Gaps	
8.3 Integrated system performance testing is specified and performed.	Required responses assumed in the accident analysis must be periodically confirmed including any time constraints.	DOE-HDBK-1169 (2.3.8)
	Airflow direction is verified at key points within the building during scheduled inspections to verify that the ventilation systems are functioning as intended. Findings are forwarded to the Design Authority Engineer. Functional startup testing is performed on individual ventilation systems after major maintenance events (ex. the replacement of a fan) to insure that interlocks and controls function as designed. Functional testing is required by the TSR of the B&C CHEX (Normal Exhaust) system plenum low pressure alarms every 18 months. A functional test of the B&C CHEX (Diversion Exhaust) system interlocks which interact with the Section F exhaust fans is required every 18 months in accordance with Operation's Best Management Practice Surveillance Evolutions. A functional test of the B&C CHEX (Diversion Exhaust) system overpressure interlocks is required every 18 months in accordance with Electrical & Instrumentation Preventative Maintenance System. A functional test of the simultaneous B&C CHEX (Diversion Exhaust) system actuation interlock is required every 18 months in accordance with Operation's Best Management Practice Surveillance Evolutions. <u>Gap Analysis</u> No Gaps - Integrated CHEX (Normal and Diversion Exhaust) system performance testing is performed as required.	

Evaluation Criteria	Discussion	Reference
9 - Maintenance		
9.1 Filter service life program should be established.	Filter life (shelf life, service life, total life) expectancy should be determined. Consider: filter environment, maximum delta-P, radiological loading, age, and potential chemical exposure.	DOE-HDBK-1169 (3.1 & App C)
	CHEX (Normal Exhaust) Systems The Sections B&C CHEX HEPA filters are controlled by TO-06-014, Control of TSR HEPA AET and Engineering Standard 15888 (HEPA Filter Requirements) which is the basis of DOE-HDBK-1169 Appendix C. Maximum HEPA shelf life is three (3) years and maximum HEPA total life is ten (10) years. <u>Gap Analysis</u> No Gaps - The Sections B&C CHEX (Normal Exhaust) HEPA filter maximum service life of 10 years has been established and controlled by the SRNL HEPA Filter Database and Computerized Maintenance Management System. Nominal CHEX HEPA filter changeout plans are begun at seven (7) years (Computerized Maintenance Management System) to ensure compliance with the ten (10) year requirement. CHEX (Diversion Exhaust) Systems Sections B&C CHEX (Diversion Exhaust) system has no HEPA filters. <u>Gap Analysis</u> No Gaps	

Evaluation Criteria	Discussion	Reference
10 - Single Failure		
10.1 Failure of one component (equipment or control) shall not affect continuous operation.	Address potential failures (example failures - fan, backup power supply, switchgear).	DOE O 420.1B (Facility Safety, Chapter I, Sec. 3.b(8))
	Failure of a single fan for the Sections B&C CHEX (Normal Exhaust) system is backed up by a standby fan. Their fan discharge dampers fail open on loss of instrument air and closed on loss of power. All four fans in each section are provided power by the same motor control center which is provided power from the Sand Filter D/G. <u>Gap Analysis</u> Gap Number 6: Discretionary Gap - Fan Motor Control Centers (MCCs) are fed by the same D/G. Failure of a single fan for the Sections B&C CHEX (Diversion Exhaust) system is backed up by a standby fan. However, the start control loop for both B&C CHEX (Diversion Exhaust) fans must be redesigned so that the standby fan does not always come on line during diversion testing. <u>Gap Analysis</u> Gap Number 7: Discretionary Gap - Performance of two of the four Diversion fans is limited by poor fan inlet conditions (system effect).	
10.2 Automatic backup electrical power shall be provided to all critical instruments and equipment required to operate and monitor the confinement ventilation system.	[DOE Guidance Document does not provide any specific evaluation guidance discussion for this criteria]	DOE-HDBK-1169 (2.2.7)
	CHEX (Normal Exhaust) Systems In the event of a power failure, one of the four CHEX fans in each section will start automatically. The remaining three CHEX fans in each section are provided with standby power, but must be started manually from the Control Room or from local hand switches at the fans. <u>Gap Analysis</u> No Gaps - Standby power is available to all critical instruments and equipment. CHEX (Diversion Exhaust) Systems In the event of a power failure, standby power will be provided to all Diversion fans. If the Diversion fan was running, it will restart automatically. The other fan will be available for normal automatic standby service. <u>Gap Analysis</u> No Gaps - Standby power is available to all critical instruments and equipment.	

Evaluation Criteria	Discussion	Reference
10.3 Backup electrical power shall be provided to all critical instruments and equipment required to operate and monitor the confinement ventilation system.	NOTE: Safety Class is addressed through previous line.	DOE-HDBK-1169 (2.2.7)
	This evaluation criteria is NOT APPLICABLE, as it is an SS-only criteria. SRNL confinement ventilation systems are evaluated to SC criteria.	

Evaluation Criteria	Discussion	Reference
11 - Other Credited Functional Requirements		
11.1 Address any specific functional requirements for the confinement ventilation system (beyond the scope of those above) credited in the DSA.	[DOE Guidance Document does not provide any specific evaluation guidance discussion for this criteria]	10 CFR 830, Subpart B
	None <u>Gap Analysis</u> No Gaps	

Evaluation Criteria	Discussion	Reference
0 - Ventilation System Description & References		
0.1 System Description	N/A	N/A
	System Description The Sections B&C Change/Restroom Heating and Ventilating (HV) exhaust systems are two independent low volume systems that exhaust directly to the atmosphere. No standby fans are provided and the fans are not connected to standby power. The building framing, roof slabs and floor slabs have been qualified to PC-3. The building shell walls (windows and transite panels) have been qualified to PC-1. Interior partitions, systems and components are qualified to a mixture of PC-1 and PC-2.	
0.2 System References	N/A	N/A
	Standards o DuPont Specifications 3027, 3017, 8728. o DuPont standard H16J, Flexible connections References System Design Descriptions (SDDs): o M-SYD-A-00021, HVAC System Design Description Air Balance Test Procedures (TPs): o TP-02-773A-BWING-01, Sec B Air Balance Test Procedure o TP-03-773A-CWING-01, Sec C Air Balance Test Procedure o 5Q1.2 Procedure 484, Building Air Survey Operator Round Sheets: o ROD-OPS-2002-002 - Control Area Operator (CAO) Round Sheets o ROD-OPS-2002-003 - Facility Operator (FO) Round Sheets Miscellaneous o SRNL-ROE-2007-00063, Table 4.3 submittal o WSRC-SA-2, Revision 3, February 2007, SRNL Technical Area Documented Safety Analysis (DSA) o WSRC-TS-97-00014, SRNL Technical Area (TA) Technical Safety Requirements (TSRs) Drawings o W156550, HV Roof Plan - Section B o ST4-11068, HV Ducting Plan - Sections B&C o W156551, HV Plan - Section C o ST5-11067, HV Roof Plan Details - Section B&C	

Evaluation Criteria	Discussion	Reference
1 - Ventilation System – General Criteria		
1.1 Pressure differential should be maintained between zones and atmosphere.	Number of zones as credited by accident analysis to control hazardous material release; demonstrate by use considering potential in-leakage.	DOE-HDBK-1169 (2.2.9) ASHRAE Design Guide
	The Sections B&C restroom area HV (Exhaust) Systems help to maintain pressure differentials between the main floor service corridors and atmosphere. <u>Gap Analysis</u> No Gap - Proper DPs are assisted by the HV system fans.	
1.2 Materials of construction should be appropriate for normal, abnormal and accident conditions.	[DOE Guidance Document does not provide any specific evaluation guidance discussion for this criteria]	DOE-HDBK-1169 (2.2.5) ASME AG-1
	The Section B&C restroom area HV (Exhaust) systems are fabricated from 22 gauge galvanized steel. <u>Gap Analysis</u> No Gap - The materials of construction are appropriate for all conditions.	
1.3 Exhaust system should withstand anticipated normal, abnormal and accident system conditions and maintain confinement integrity.	As required by accident analysis to prevent accident release.	DOE-HDBK-1169 (2.4) ASHRAE Design Guide
	The Sections B&C restroom area HV (Exhaust) Systems help to maintain pressure differentials between the main floor service corridors and atmosphere. In the event of a power failure they would not be operable, however the partial shutdown of ventilation systems is addressed by operating procedures TO-06-011, Reduction/Restoration of C Section CHEX and TO-06-015, Reduction/Restoration of Section B CHEX. The HV Systems would not be directly impacted by the four relevant accident scenarios. <u>Gap Analysis</u> No Gap - Proper DPs are assisted by the HV system fans for all conditions.	
1.4 Confinement ventilation systems shall have appropriate filtration to minimize release.	Address: 1) Type of filter (e.g., HEPA, sand, sintered metal); 2) Filter sizing (flow capacity and pressure drop); 3) Decontamination Factor vs. accident analysis assumptions.	ASME AG-1 DOE-HDBK-1169 (2.2.1)
	The section B&C restroom area HV (Exhaust) systems are not HEPA filtered. <u>Gap Analysis</u> Gap Number 8: Discretionary Gap - The two B&C HV sub-systems do not have HEPA filtration.	

Evaluation Criteria	Discussion	Reference
2 - Ventilation System – Instrumentation & Control		
2.1 Provide system status instrumentation and/or alarms.	Address key information to ensure system operability (e.g., system delta-P, filter pressure drop).	ASME AG-1 DOE-HDBK-1169 ASHRAE Design Guide (Section 4)
	The Sections B&C restroom area HV (Exhaust) systems (one fan per section) have neither ventilation status information nor alarms provided to the Control Area Operator (CAO) in the C041 Control Room. <u>Gap Analysis</u> Gap Number 9: Discretionary Gap - The two B/C-HV sub-systems do not have any local or remote system status instrumentation or alarms.	
2.2 Interlock supply and exhaust fans to prevent positive pressure differential.	[DOE Guidance Document does not provide any specific evaluation guidance discussion for this criteria]	DOE-HDBK-1169 ASHRAE Design Guide (Section 4)
	The Sections B&C restroom area HV (Exhaust) system fans (one per section) are not interlocked with any of the main floor HVAC supply fans. <u>Gap Analysis</u> No Gap - These low volume HV fans are not expected to significantly impact the facility air balance under abnormal or accident conditions.	
2.3 Post accident indication of filter break-through.	Instrumentation supports post accident planning and response; should be considered critical instrumentation for SC.	TECH-34
	The Sections B&C restroom area HV (Exhaust) systems discharge directely to the environment from the tertiary confinement zone. They do not have HEPA filters or any provision for exhaust air monitoring. <u>Gap Analysis</u> Gap Number 10: Discretionary Gap - Emission points from tertiary confinement zone do not have post accident indication of filter break through.	

Evaluation Criteria	Discussion	Reference
2.4 Reliability of control system to maintain confinement function under normal, abnormal and accident conditions.	Address, for example, impacts of potential common mode failures from events that would require active confinement function.	DOE-HDBK-1169 (2.4)
	The Section B&C HV Systems are not expected to significantly impact the facility air balance under abnormal or accident conditions. All controls are local for the system are local except an automatice shutdown circuit interlocked with the diversion system controls. If a control system is added to close the gaps for criteria 2.1 it will have the required reliability to control the system. <u>Gap Analysis</u> Gap Number 9: Discretionary Gap - The two B/C-HV sub-systems do not have any local or remote system status instrumentation or alarms.	
2.5 Control components should fail safe.	[DOE Guidance Document does not provide any specific evaluation guidance discussion for this criteria]	DOE-HDBK-1169 (2.4)
	The Sections B&C HV fan controls are fail safe and will continue to run if a control component fails while the fan is running. <u>Gap Analysis</u> No Gap - Control components for the Sections B&C HV systems are fail-safe.	

Evaluation Criteria	Discussion	Reference
3 - Resistance to Internal Events – Fire		
3.1 Confinement ventilation systems should withstand credible fire events and be available to operate and maintain confinement.	Required for new facilities; as required by the accident analysis for existing facilities (discretionary). Must address protection of filter media.	DOE-HDBK-1169 (10.1) DOE-STD-1066
	As discussed in Table 4-3 transmittal letter SRNL-ROE-2007-00063, Attachment 4, Table 1, this evaluation criteria is NOT APPLICABLE. Per Ventilation System Evaluation Guidance for Safety-Related and Non-Safety Related Systems, Revision 0, January 2006, Page 21 and 22 Discussion, the evaluation of internal fire events for an existing facility is only required if the accident analysis takes credit for the active confinement ventilation system.	
3.2 Confinement ventilation systems should not propagate spread of fire.	Required for new facilities; as required by the accident analysis for existing facilities (discretionary). Address fire barriers, fire dampers arrangement.	DOE-HDBK-1169 (10.1) DOE-STD-1066
	As discussed in Table 4-3 transmittal letter SRNL-ROE-2007-00063, Attachment 4, Table 1, this evaluation criteria is NOT APPLICABLE. Per Ventilation System Evaluation Guidance for Safety-Related and Non-Safety Related Systems, Revision 0, January 2006, Page 21 and 22 Discussion, the evaluation of internal fire events for an existing facility is only required if the accident analysis takes credit for the active confinement ventilation system.	

Evaluation Criteria	Discussion	Reference
4 - Resistance to External Events – Natural Phenomena – Seismic		
4.1 Confinement ventilation systems should safely withstand earthquakes.	If the active CVS system is not credited in a seismic accident condition there is no need to evaluate that performance and/or design attribute for the confinement ventilation system (discretionary). Also, any seismic impact on the confinement ventilation system performance will be based on the current functional requirements in the DSA. NOTE: Seismic requirements may apply to Defense-in-Depth items indirectly for the protection of safety SSCs.	ASME AG-1 (AA) DOE O 420.1B DOE-HDBK-1169 (9.2)
	As discussed in Table 4-3 transmittal letter SRNL-ROE-2007-00063, Attachment 4, Table 1, this evaluation criteria is NOT APPLICABLE. Per 2004-2 Ventilation System Evaluation Guidance Addendum, March 6, 2007, Caution 4 and Ventilation System Evaluation Guidance for Safety-Related and Non-Safety Related Systems, Revision 0, January 2006, Page 22 Discussion, the evaluation of seismic events is only required if the accident analysis takes credit for the active confinement ventilation system during or after the NPH event.	

Evaluation Criteria	Discussion	Reference
5 - Resistance to External Events – Natural Phenomena – Tornado/Wind		
5.1 Confinement ventilation systems should safely withstand tornado depressurization.	If the active CVS is not credited in a tornado condition there is no need to evaluate that performance and/or design attribute for the confinement ventilation system (discretionary). Also, any tornado impact on the confinement ventilation system performance will be based on the current functional requirements in the DSA.	DOE O 420.1B DOE-HDBK-1169 (9.2)
	As discussed in Table 4-3 transmittal letter SRNL-ROE-2007-00063, Attachment 4, Table 1, this evaluation criteria is NOT APPLICABLE. Per 2004-2 Ventilation System Evaluation Guidance Addendum, March 6, 2007, Caution 4 and Ventilation System Evaluation Guidance for Safety-Related and Non-Safety Related Systems, Revision 0, January 2006, Pages 22 and 23 Discussion, the evaluation of tornado and wind events is only required if the accident analysis takes credit for the active confinement ventilation system during or after the NPH event.	
5.2 Confinement ventilation systems should withstand design wind effects on system performance.	If the active CVS is not credited in a wind condition there is no need to evaluate that performance and/or design attribute for the confinement ventilation system (discretionary). Also, any wind impact on the confinement ventilation system performance will be based on the current NP analysis in the DSA.	DOE O 420.1B DOE-HDBK-1169 (9.2)
	As discussed in Table 4-3 transmittal letter SRNL-ROE-2007-00063, Attachment 4, Table 1, this evaluation criteria is NOT APPLICABLE. Per 2004-2 Ventilation System Evaluation Guidance Addendum, March 6, 2007, Caution 4 and Ventilation System Evaluation Guidance for Safety-Related and Non-Safety Related Systems, Revision 0, January 2006, Pages 22 and 23 Discussion, the evaluation of tornado and wind events is only required if the accident analysis takes credit for the active confinement ventilation system during or after the NPH event.	

Evaluation Criteria	Discussion	Reference
6 - Other NP Events (eg. flooding, precipitation)		
6.1 Confinement ventilation system should withstand other NP events considered credible in the DSA where the confinement ventilation system is credited.	If the active confinement ventilation system is not credited for this event there is no need to evaluate that performance and/or design attribute for the confinement ventilation system (discretionary). Also, any impact on the confinement ventilation system performance will be based on the current NP analysis in the DSA.	DOE O 420.1B DOE-HDBK-1169 (9.2)
	As discussed in Table 4-3 transmittal letter SRNL-ROE-2007-00063, Attachment 4, Table 1, this evaluation criteria is NOT APPLICABLE. Per 2004-2 Ventilation System Evaluation Guidance Addendum, March 6, 2007, Caution 4 and Ventilation System Evaluation Guidance for Safety-Related and Non-Safety Related Systems, Revision 0, January 2006, Page 23 Discussion, the evaluation of other NPH events is only required if the accident analysis takes credit for the active confinement ventilation system during or after the NPH event.	

Evaluation Criteria	Discussion	Reference
7 - Range Fires / Dust Storms		
7.1 Administrative controls should be established to protect confinement ventilation systems from barrier threatening events.	Ensure appropriately thought out response to external threat is defined (e.g. pre-fire plan).	DOE O 420.1B
	The Savannah River Forestry Department is responsible for fire fighting efforts in regards to wildland fires. They also have a program of controlled burns and mechanical thinning of underbrush to limit or prevent wildland fires from spreading out of control. If the fire encroaches upon SRNL, the Savannah River Site Fire Department will direct extinguishing efforts. Building 773-A has a current Fire Pre Plan and has procedures to reduce confinement ventilation system air flow (originally developed for electrical system maintenance) that will minimize soot loading of the filters in the ventilation systems. Reference: AOP-06-007 <u>Gap Analysis</u> No Gap - Administrative controls are sufficient to protect the confinement ventilation systems from barrier threatening events.	

Evaluation Criteria	Discussion	Reference
8 - Testability		
8.1 Design supports the periodic inspection and testing of filters and housing, and test and inspections are conducted periodically.	Ability to test for leakage per intent of N510.	DOE-HDBK-1169 (2.3.8) ASME AG-1 ASME N510
	The Sections B&C restroom area HV (Exhaust) Systems do not have HEPA exhaust filters that can be tested. <u>Gap Analysis</u> No Gap - Periodic inspection and testing of HEPA filters will be indicated if HV HEPA filters are added.	
8.2 Instrumentation required to support system operability is calibrated.	Credited instrumentation should have specified calibration / surveillance requirements. Non-safety instrumentation should be calibrated as necessary to support system functionality.	DOE-HDBK-1169 (2.3.8)
	The Sections B&C restroom/area HV (Exhaust) systems has no instruments to calibrate. <u>Gap Analysis</u> No Gap	
8.3 Integrated system performance testing is specified and performed.	Required responses assumed in the accident analysis must be periodically confirmed including any time constraints.	DOE-HDBK-1169 (2.3.8)
	The Sections B&C restroom/area HV (Exhaust) Systems have no integrated test requirements in the TSR. <u>Gap Analysis</u> No Gap - Sections B&C HV systems have no required integrated testing.	

Evaluation Criteria	Discussion	Reference
9 - Maintenance		
9.1 Filter service life program should be established.	Filter life (shelf life, service life, total life) expectancy should be determined. Consider: filter environment, maximum delta-P, radiological loading, age, and potential chemical exposure.	DOE-HDBK-1169 (3.1 & App C)
	The Sections B&C restroom area HV (Exhaust) Systems do not have HEPA exhaust filters. If HEPA filters are added under Gap for Criteria 1.4 they will be managed in accordance with Engineering Standard 15888 which is the basis of DOE-HDBK-1169 Appendix C. <u>Gap Analysis</u> No Gap - Sections B&C HV systems have no HEPA filters.	

Evaluation Criteria	Discussion	Reference
10 - Single Failure		
10.1 Failure of one component (equipment or control) shall not affect continuous operation.	Address potential failures (example failures - fan, backup power supply, switchgear).	DOE O 420.1B (Facility Safety, Chapter I, Sec. 3.b(8))
	The Sections B&C HV Systems are not expected to significantly impact the facility air balance under abnormal or accident conditions and have no installed backup components or power supplies. <u>Gap Analysis</u> Gap Number 11: Discretionary Gap - Two exhaust sub-systems are not provided with redundant fans..	
10.2 Automatic backup electrical power shall be provided to all critical instruments and equipment required to operate and monitor the confinement ventilation system.	[DOE Guidance Document does not provide any specific evaluation guidance discussion for this criteria]	DOE-HDBK-1169 (2.2.7)
	The Sections B&C restroom area HV (Exhaust) systems will not operate in the event of a power failure. <u>Gap Analysis</u> Gap Number 12: Discretionary Gap - The two B/C-HV sub-systems fans do not have automatic back-up power.	
10.3 Backup electrical power shall be provided to all critical instruments and equipment required to operate and monitor the confinement ventilation system.	NOTE: Safety Class is addressed through previous line.	DOE-HDBK-1169 (2.2.7)
	This evaluation criteria is NOT APPLICABLE, as it is an SS-only criteria. SRNL confinement ventilation systems are evaluated to SC criteria.	

Evaluation Criteria	Discussion	Reference
11 - Other Credited Functional Requirements		
11.1 Address any specific functional requirements for the confinement ventilation system (beyond the scope of those above) credited in the DSA.	[DOE Guidance Document does not provide any specific evaluation guidance discussion for this criteria]	10 CFR 830, Subpart B
	None <u>Gap Analysis</u> No Gap	

Evaluation Criteria	Discussion	Reference
0 - Ventilation System Description & References		
0.1 System Description	N/A	N/A
	<u>System Description</u> The Sections B&C Heating Ventilation and Air Conditioning (HVAC) Systems (Figure B) provide conditioned air to the offices and corridors (tertiary confinement zone) as well as directly into the labs. The system operates at 1/3 capacity on a loss of normal power or in CHEX diversion mode (supply air to offices only). The combined systems consist of 17 100% outside air units and a number of booster cooling units. The building framing, roof slabs and floor slabs have been qualified to PC-3. The building shell walls (windows and transite panels) have been qualified to PC-1. Interior partitions, systems and components are qualified to a mixture of PC-1 and PC-2.	
0.2 System References	N/A	N/A
	<u>Standards</u> o DuPont Specifications 3027, 3017, 8728. o DuPont standard H16J, Flexible connections <u>References</u> System Design Descriptions (SDDs): o M-SYD-A-00001, HVAC System Design Description Air Balance Test Procedures (TPs): o TP-02-773A-BWING-01, Sec B Air Balance Test Procedure o TP-03-773A-CWING-01, Sec C Air Balance Test Procedure o 5Q1.2 Procedure 484, Building Air Survey Operator Round Sheets: o ROD-OPS-2002-002 - Control Area Operator (CAO) Round Sheets o ROD-OPS-2002-003 - Facility Operator (FO) Round Sheets Miscellaneous o SRNL-ROE-2007-00063, Table 4.3 submittal o WSRC-SA-2, Revision 3, February 2007, SRNL Technical Area Documented Safety Analysis (DSA) o WSRC-TS-97-00014, SRNL Technical Area (TA) Technical Safety Requirements (TSRs) Drawings o W156514 through W156517, HVAC Service Floor Ducting Plan - Section B o W156518 through W156521, HVAC Service Floor Ducting Plan - Section C	

Evaluation Criteria	Discussion	Reference
1 - Ventilation System – General Criteria		
1.1 Pressure differential should be maintained between zones and atmosphere.	Number of zones as credited by accident analysis to control hazardous material release; demonstrate by use considering potential in-leakage.	DOE-HDBK-1169 (2.2.9) ASHRAE Design Guide
	The Sections B&C zone flows and ventilation system interactions are described in the specific SDD documents (see references Section 0.2). Differential pressures (DPs) are not measured directly, but are maintained between zones by monitoring and balancing air flows. Periodic monitoring is conducted, including hood face velocities (Procedure 4Q/401) and air flow directions (Procedure 5Q1.2/484). Air balances are regularly conducted on all ventilation systems within a building section to verify facility design basis flows, as documented by the Sections B&C Air Balance test procedures (see references Section 0.2). Key system parameters are recorded on a daily and weekly basis (operator rounds listed in references Section 0.2) which allows monitoring of ventilation system function and performance. The HVAC Systems are designed to maintain the primary containment zones at a negative pressure with respect to surrounding areas such that a positive airflow is maintained into the primary confinement zones from the secondary confinement zones. Confinement Zones o Primary Confinement — Lab Hoods / Gloveboxes / Ducting through 1st testable HEPA filter stage o Secondary Confinement — Labs / Filter Rooms / Equipment Rooms / Service Corridor o Tertiary Confinement — Personnel Corridors / Offices / General Service Floor Area o Administrative Area — Sections A&D / Offices <u>Gap Analysis</u> No Gap - DPs are properly maintained under normal conditions.	
1.2 Materials of construction should be appropriate for normal, abnormal and accident conditions.	[DOE Guidance Document does not provide any specific evaluation guidance discussion for this criteria]	DOE-HDBK-1169 (2.2.5) ASME AG-1
	The Sections B&C HVAC (Supply Air) systems provide clean conditioned air to the building. Ducting is fabricated from 24 gauge galvanized steel and insulated where appropriate. Some insulation contains asbestos. Supply fans are fabricated from carbon steel. Flexible connections between fans and ducting or fans and casing are made of fabric collars. Collars are mounted over galvanized steel spool pieces with a maximum end to end gap of approximately 1". Fabric is non-burning neoprene attached to spool pieces with stainless steel bands. Seams are glued joints. <u>Gap Analysis</u> No Gap - Materials are appropriate for the expected service.	

Evaluation Criteria	Discussion	Reference
1.3 Exhaust system should withstand anticipated normal, abnormal and accident system conditions and maintain confinement integrity.	As required by accident analysis to prevent accident release.	DOE-HDBK-1169 (2.4) ASHRAE Design Guide
	The 773-A Building HVAC Systems consists of intake ducting, dampers, fans, filters banks, associated controls and instrumentation. During normal operation these multiple systems run continuously within defined performance parameters to maintain the proper containment air flow balance. The HVAC System components are adequate for normal and abnormal operation. Abnormal conditions include power failure, partial shutdown, or activation of the CHEX (Diversion Exhaust) system. In the event of a power failure, conditioned air will be supplied to clean areas only. All supply systems receiving outside air have freeze stats to automatically shut the fans down to prevent component damage due to freezing temperatures. Office and laboratory supply fans share a common outside inlet and windbox. Supply air (HVAC) fans that supply laboratory spaces have automatic dampers on the fan discharge that close if the fan is de-energized to prevent the possibility of the backflow of air from the laboratories to the inlet of the office supply fans. Partial shutdown of ventilation systems is addressed by operating procedures TO-06-011, Reduction/Restoration of C Section CHEX and TO-06-015, Reduction/Restoration of B Section CHEX. Activation of the CHEX Diversion system shuts down approximately 2/3rds of the Sections B&C supply air (HVAC) fans to insure that the facility air balance is maintained. The following accident scenarios are considered. Process Explosion - Unstable Lab Chemical or Accumulation of Process Flammable Gas or VOCs with no consequential fire - Ventilation systems would operate normally to maintain a positive pressure differential into the effected lab. Explosion - Glovebox Overpressurization - same as above. Explosion - Accumulation of Distributed Flammable Gas with no consequential fire - same as above. Drop / Spill - Ventilation systems would operate normally to draw lab/cell air towards hoods. Normal room infiltration would contain the spill to the effected lab/cell. If the exhaust system HEPA filter plugs, the contaminants would be contained within the lab and ductwork. If the HEPA is compromised and contamination is detected in the B or C stack, the Diversion system would be placed in service to direct exhaust air to the Sand Filter. If filter housings or ducting are compromised, the RREX systems would contain the contamination. <u>Gap Analysis</u> Gap Number 2: Discretionary Gap - Isolation dampers are not provided to isolate individual portions of the supply system. Note: Also see 773-A Sections B&C CHEX and 773-A Sections B&C PHEX.	

Evaluation Criteria	Discussion	Reference
1.4 Confinement ventilation systems shall have appropriate filtration to minimize release.	Address: 1) Type of filter (e.g., HEPA, sand, sintered metal); 2) Filter sizing (flow capacity and pressure drop); 3) Decontamination Factor vs. accident analysis assumptions.	ASME AG-1 DOE-HDBK-1169 (2.2.1)
	The Sections B&C HVAC (Supply Air) systems have replaceable blanket filters, installed to filter incoming supply air.	
	<u>Gap Analysis</u> No Gap - Sections B&C HVAC systems do not have HEPA filtration.	

Evaluation Criteria	Discussion	Reference
2 - Ventilation System – Instrumentation & Control		
2.1 Provide system status instrumentation and/or alarms.	Address key information to ensure system operability (e.g., system delta-P, filter pressure drop).	ASME AG-1 DOE-HDBK-1169 ASHRAE Design Guide (Section 4)
	The Sections B&C HVAC (Supply Air) systems (about 17 fans per section) have neither status information nor alarms provided to the Control Area Operator (CAO) in the C041 Control Room (CR). <u>Gap Analysis</u> Gap Number 13: Discretionary Gap - The B/C HVAC systems do not have any remote system status instrumentation, control or alarms. Gap Number 14: Discretionary Gap - There is no ΔP measurement between the atmosphere and the tertiary confinement zones.	
2.2 Interlock supply and exhaust fans to prevent positive pressure differential.	[DOE Guidance Document does not provide any specific evaluation guidance discussion for this criteria]	DOE-HDBK-1169 ASHRAE Design Guide (Section 4)
	The Sections B&C HVAC (Supply Air) system fans (about 17 per section) are not interlocked with their CHEX and PHEX fan counterparts. <u>Gap Analysis</u> Gap Number 3: Discretionary Gap - Interlocks are not provided between the supply and exhaust systems. Note: Also see 773-A Sections B&C CHEX and 773-A Sections B&C PHEX	
2.3 Post accident indication of filter break-through.	Instrumentation supports post accident planning and response; should be considered critical instrumentation for SC.	TECH-34
	The Sections B&C HVAC (Supply Air) systems are not impacted by the accident scenarios related to exhaust filter break-through. <u>Gap Analysis</u> No Gap - Sections B&C HVAC systems do not have exhaust filters where breakthrough would occur.	

Evaluation Criteria	Discussion	Reference
2.4 Reliability of control system to maintain confinement function under normal, abnormal and accident conditions.	Address, for example, impacts of potential common mode failures from events that would require active confinement function.	DOE-HDBK-1169 (2.4)
	Abnormal conditions include power failure, partial shutdown, or activation of the Diversion system. In the event of a power failure, conditioned air will be supplied to clean areas only (Sections B & C main floor offices and one Section B service floor mezzanine). Office and laboratory supply fans share a common outside inlet. All supply systems receiving outside air have freeze stats to automatically shut the fans down to prevent component damage due to freezing temperatures. Supply fans that supply laboratory spaces have automatic dampers on the fan discharge that close if the fan is de-energized to prevent the possibility of the backflow of air from the laboratories to the inlet of the office supply fans. HVAC systems do not have installed backup systems. Partial shutdown of ventilation systems is addressed by operating procedures TO-06-011, Reduction/Restoration of Section C CHEX and TO-06-015, Reduction/Restoration of Section B CHEX. Activation of the Diversion system shuts down approximately 2/3rds of the Sections B&C Supply fans to insure that the facility air balance is maintained. Procedures control Lab Operations during abnormal conditions. Possible abnormal condition would be loss of steam reheat during periods of high humidity. This could result in condensation within confinement ducting, possibly wetting the HEPA filters which may reduce airflow and may result in contamination wicking through the filter media. Under the four accident scenarios, the Supply air HVAC systems would function normally. The Sections B&C HVAC supply air system fans are periodically monitored by Operations personnel on their rounds during normal conditions. System flow manipulations during all operating conditions are locally made at each fan according to Abnormal Operating Procedures (AOPs) and Emergency Operating Procedures (EOPs). <u>Gap Analysis</u> Gap Number 13: Discretionary Gap - The B/C HVAC systems do not have any remote system status instrumentation, control or alarms. Note: Also see B/C-HVAC Criteria 2.1.	
2.5 Control components should fail safe.	[DOE Guidance Document does not provide any specific evaluation guidance discussion for this criteria]	DOE-HDBK-1169 (2.4)
	All control equipment for the Sections B & C HVAC systems are designed to be fail safe. Automatic discharge dampers are not installed and/or operational on all of the lab supply fans to consistently close on loss of normal power. <u>Gap Analysis</u> Gap Number 2: Discretionary Gap - Isolation dampers are not provided to isolate individual portions of the supply system.	

Evaluation Criteria	Discussion	Reference
3 - Resistance to Internal Events – Fire		
3.1 Confinement ventilation systems should withstand credible fire events and be available to operate and maintain confinement.	Required for new facilities; as required by the accident analysis for existing facilities (discretionary). Must address protection of filter media.	DOE-HDBK-1169 (10.1) DOE-STD-1066
	As discussed in Table 4-3 transmittal letter SRNL-ROE-2007-00063, Attachment 4, Table 1, this evaluation criteria is NOT APPLICABLE. Per Ventilation System Evaluation Guidance for Safety-Related and Non-Safety Related Systems, Revision 0, January 2006, Page 21 and 22 Discussion, the evaluation of internal fire events for an existing facility is only required if the accident analysis takes credit for the active confinement ventilation system.	
3.2 Confinement ventilation systems should not propagate spread of fire.	Required for new facilities; as required by the accident analysis for existing facilities (discretionary). Address fire barriers, fire dampers arrangement.	DOE-HDBK-1169 (10.1) DOE-STD-1066
	As discussed in Table 4-3 transmittal letter SRNL-ROE-2007-00063, Attachment 4, Table 1, this evaluation criteria is NOT APPLICABLE. Per Ventilation System Evaluation Guidance for Safety-Related and Non-Safety Related Systems, Revision 0, January 2006, Page 21 and 22 Discussion, the evaluation of internal fire events for an existing facility is only required if the accident analysis takes credit for the active confinement ventilation system.	

Evaluation Criteria	Discussion	Reference
4 - Resistance to External Events – Natural Phenomena – Seismic		
4.1 Confinement ventilation systems should safely withstand earthquakes.	If the active CVS system is not credited in a seismic accident condition there is no need to evaluate that performance and/or design attribute for the confinement ventilation system (discretionary). Also, any seismic impact on the confinement ventilation system performance will be based on the current functional requirements in the DSA. NOTE: Seismic requirements may apply to Defense-in-Depth items indirectly for the protection of safety SSCs.	ASME AG-1 (AA) DOE O 420.1B DOE-HDBK-1169 (9.2)
	As discussed in Table 4-3 transmittal letter SRNL-ROE-2007-00063, Attachment 4, Table 1, this evaluation criteria is NOT APPLICABLE. Per 2004-2 Ventilation System Evaluation Guidance Addendum, March 6, 2007, Caution 4 and Ventilation System Evaluation Guidance for Safety-Related and Non-Safety Related Systems, Revision 0, January 2006, Page 22 Discussion, the evaluation of seismic events is only required if the accident analysis takes credit for the active confinement ventilation system during or after the NPH event.	

Evaluation Criteria	Discussion	Reference
5 - Resistance to External Events – Natural Phenomena – Tornado/Wind		
5.1 Confinement ventilation systems should safely withstand tornado depressurization.	If the active CVS is not credited in a tornado condition there is no need to evaluate that performance and/or design attribute for the confinement ventilation system (discretionary). Also, any tornado impact on the confinement ventilation system performance will be based on the current functional requirements in the DSA.	DOE O 420.1B DOE-HDBK-1169 (9.2)
	As discussed in Table 4-3 transmittal letter SRNL-ROE-2007-00063, Attachment 4, Table 1, this evaluation criteria is NOT APPLICABLE. Per 2004-2 Ventilation System Evaluation Guidance Addendum, March 6, 2007, Caution 4 and Ventilation System Evaluation Guidance for Safety-Related and Non-Safety Related Systems, Revision 0, January 2006, Pages 22 and 23 Discussion, the evaluation of tornado and wind events is only required if the accident analysis takes credit for the active confinement ventilation system during or after the NPH event.	
5.2 Confinement ventilation systems should withstand design wind effects on system performance.	If the active CVS is not credited in a wind condition there is no need to evaluate that performance and/or design attribute for the confinement ventilation system (discretionary). Also, any wind impact on the confinement ventilation system performance will be based on the current NP analysis in the DSA.	DOE O 420.1B DOE-HDBK-1169 (9.2)
	As discussed in Table 4-3 transmittal letter SRNL-ROE-2007-00063, Attachment 4, Table 1, this evaluation criteria is NOT APPLICABLE. Per 2004-2 Ventilation System Evaluation Guidance Addendum, March 6, 2007, Caution 4 and Ventilation System Evaluation Guidance for Safety-Related and Non-Safety Related Systems, Revision 0, January 2006, Pages 22 and 23 Discussion, the evaluation of tornado and wind events is only required if the accident analysis takes credit for the active confinement ventilation system during or after the NPH event.	

Evaluation Criteria	Discussion	Reference
6 - Other NP Events (eg. flooding, precipitation)		
6.1 Confinement ventilation system should withstand other NP events considered credible in the DSA where the confinement ventilation system is credited.	If the active confinement ventilation system is not credited for this event there is no need to evaluate that performance and/or design attribute for the confinement ventilation system (discretionary). Also, any impact on the confinement ventilation system performance will be based on the current NP analysis in the DSA.	DOE O 420.1B DOE-HDBK-1169 (9.2)
	As discussed in Table 4-3 transmittal letter SRNL-ROE-2007-00063, Attachment 4, Table 1, this evaluation criteria is NOT APPLICABLE. Per 2004-2 Ventilation System Evaluation Guidance Addendum, March 6, 2007, Caution 4 and Ventilation System Evaluation Guidance for Safety-Related and Non-Safety Related Systems, Revision 0, January 2006, Page 23 Discussion, the evaluation of other NPH events is only required if the accident analysis takes credit for the active confinement ventilation system during or after the NPH event.	

Evaluation Criteria	Discussion	Reference
7 - Range Fires / Dust Storms		
7.1 Administrative controls should be established to protect confinement ventilation systems from barrier threatening events.	Ensure appropriately thought out response to external threat is defined (e.g. pre-fire plan).	DOE O 420.1B
	The Savannah River Forestry Department is responsible for fire fighting efforts in regards to wildland fires. They also have a program of controlled burns and mechanical thinning of underbrush to limit or prevent wildland fires from spreading out of control. If the fire encroaches upon SRNL, the Savannah River Site Fire Department will direct extinguishing efforts. Building 773-A has a current Fire Pre Plan and has procedures to reduce confinement ventilation system air flow (originally developed for electrical system maintenance) that will minimize soot loading of the filters in the ventilation systems. Reference: AOP-06-007 <u>Gap Analysis</u> No Gap - Administrative controls are sufficient to protect the confinement ventilation systems from barrier threatening events.	

Evaluation Criteria	Discussion	Reference
8 - Testability		
8.1 Design supports the periodic inspection and testing of filters and housing, and test and inspections are conducted periodically.	Ability to test for leakage per intent of N510.	DOE-HDBK-1169 (2.3.8) ASME AG-1 ASME N510
	Sections B&C HVAC supply fan windbox prefilters are changed out periodically (at least annually). Main and Service Floor door and wall register prefilters are changed on frequencies ranging from semiannual to annual. There are no in-service inspection requirements. <u>Gap Analysis</u> No Gap - Sections B&C HVAC systems have no testable or inspectable exhaust filters.	
8.2 Instrumentation required to support system operability is calibrated.	Credited instrumentation should have specified calibration / surveillance requirements. Non-safety instrumentation should be calibrated as necessary to support system functionality.	DOE-HDBK-1169 (2.3.8)
	The Sections B&C HVAC (Supply Air) systems have no calibration requirements in the TSR. Non-safety instrumentation is calibrated on an as-needed basis. <u>Gap Analysis</u> No Gap - Sections B&C HVAC systems have no calibration requirements.	
8.3 Integrated system performance testing is specified and performed.	Required responses assumed in the accident analysis must be periodically confirmed including any time constraints.	DOE-HDBK-1169 (2.3.8)
	The Sections B&C HVAC (Supply Air) systems have no requirements in the TSR for integrated system performance testing. Testing of the interlocks between the HVAC system and CHEX Diversion system are not credited in the accident analysis but is tested on a periodic basis as part of the CHEX Diversion system integrated testing. <u>Gap Analysis</u> No Gaps	

Evaluation Criteria	Discussion	Reference
9 - Maintenance		
9.1 Filter service life program should be established.	Filter life (shelf life, service life, total life) expectancy should be determined. Consider: filter environment, maximum delta-P, radiological loading, age, and potential chemical exposure.	DOE-HDBK-1169 (3.1 & App C)
	Sections B&C HVAC units do not use HEPA filters. A service life program is not required. <u>Gap Analysis</u> No Gap - Sections B&C HVAC systems do not use HEPA filters.	

Evaluation Criteria	Discussion	Reference
10 - Single Failure		
10.1 Failure of one component (equipment or control) shall not affect continuous operation.	Address potential failures (example failures - fan, backup power supply, switchgear).	DOE O 420.1B (Facility Safety, Chapter I, Sec. 3.b(8))
	The Sections B&C HVAC (Supply Air) systems include approximately 17 fans each. It is unlikely that more than a 2 or 3 of these fans might fail at the same time. Procedures are established and in place to identify these failures and to implement mitigating actions. In the event of a power failure, the office supply fans, providing air flow to the main floor of Sections B&C, and one service floor supply fan will operate on standby power. <u>Gap Analysis</u> No Gap - No single failure in the Sections B&C HVAC systems will prevent critical confinement equipment from operating.	
10.2 Automatic backup electrical power shall be provided to all critical instruments and equipment required to operate and monitor the confinement ventilation system.	[DOE Guidance Document does not provide any specific evaluation guidance discussion for this criteria]	DOE-HDBK-1169 (2.2.7)
	In the event of a power failure, the office supply fans providing air flow to the main floor of Sections B&C and to one service floor supply fan will operate on standby power from a diesel generator. All other fans will not operate. <u>Gap Analysis</u> No Gap - No single fan failure in the Sections B&C HVAC systems will prevent normal operation. A power failure will still permit key confinement ventilation HVAC fans to operate on standby power.	
10.3 Backup electrical power shall be provided to all critical instruments and equipment required to operate and monitor the confinement ventilation system.	NOTE: Safety Class is addressed through previous line.	DOE-HDBK-1169 (2.2.7)
	This evaluation criteria is NOT APPLICABLE, as it is an SS-only criteria. SRNL confinement ventilation systems are evaluated to SC criteria.	

Evaluation Criteria	Discussion	Reference
11 - Other Credited Functional Requirements		
11.1 Address any specific functional requirements for the confinement ventilation system (beyond the scope of those above) credited in the DSA.	[DOE Guidance Document does not provide any specific evaluation guidance discussion for this criteria]	10 CFR 830, Subpart B
	None <u>Gap Analysis</u> No Gap	

Evaluation Criteria	Discussion	Reference
0 - Ventilation System Description & References		
0.1 System Description	N/A	N/A
	System Description The Off-Gas Exhaust (OGE) system serves gloveboxes and other special process enclosures equipped with inlet and outlet HEPA filters. Two interconnected OGE sub-systems service Sections B, C and F. Each sub-system has a normal and standby two stage HEPA filter housing, a normal and standby exhaust fan on diesel generator power and discharge to the SRNL Sand Filter. See Figure A. The building framing, roof slabs and floor slabs have been qualified to PC-3. The building shell walls (windows and transite panels) have been qualified to PC-1. Interior partitions, systems and components are qualified to a mixture of PC-1 and PC-2.	
0.2 System References	N/A	N/A
	Standards o DuPont Specifications 3027, 3017, 8728. o M-SPP-G-00243, HEPA Filter Specification o SRS Engineering Standard 15888, HEPA Filter Requirements o ANSI/ASME NQA-1, Quality Assurance Program Requirements for Nuclear Facilities, 1997 o DOE-STD-3020-2005, DOE Technical Standard - Specification for HEPA Filters Used by DOE Contractors o DOE-STD-3025-2007, DOE Technical Standard - Quality Assurance Inspection and Testing of HEPA Filters o UL 586, UL Standard for Safety, High Efficiency, Particulate, Air Filter Units, 1996. References System Design Descriptions (SDDs): o M-SYD-A-00002, Off Gas Exhaust (OGE) System Design Description Operator Round Sheets: o ROD-OPS-2002-002 - Control Area Operator (CAO) Round Sheets o ROD-OPS-2002-003 - Facility Operator (FO) Round Sheets Miscellaneous o SRNL-ESD-2007-00017, Structural Integrity Program Scope, Resources & Estimate, 02/07/07 o SRNL-ROE-2007-00063, Table 4.3 submittal o WSRC-SA-2, Revision 3, February 2007, SRNL Technical Area Documented Safety Analysis (DSA) o WSRC-TS-97-00014, SRNL Technical Area (TA) Technical Safety Requirements (TSRs) Drawings o M-M6-A-0193 - Section B OGE P&ID Sheet 1 of 3 o M-M6-A-0194 - Section B OGE P&ID Sheet 2 of 3 o M-M6-A-0195 - Section B OGE P&ID Sheet 3 of 3 o M-M6-A-0197 - Section C OGE P&ID Sheet 1 of 4 o M-M6-A-0198 - Section C OGE P&ID Sheet 2 of 4 o M-M6-A-0212 - Section C OGE P&ID Sheet 3 of 4 o M-M6-A-0199 - Section C OGE P&ID Sheet 4 of 4 o M-M6-A-0200 - Section F OGE P&ID	

Evaluation Criteria	Discussion	Reference
1 - Ventilation System – General Criteria		
1.1 Pressure differential should be maintained between zones and atmosphere.	Number of zones as credited by accident analysis to control hazardous material release; demonstrate by use considering potential in-leakage.	DOE-HDBK-1169 (2.2.9) ASHRAE Design Guide
	Confinement Zones • Primary Confinement — Gloveboxes, Intermediate Level Cells and Vacuum Pump Boxes • Secondary Confinement — Labs containing gloveboxes and associated mechanical rooms • Tertiary Confinement — Building exterior shell including Offices, Corridors and General Support Areas around Lab Modules and mechanical spaces The Off-Gas Exhaust (OGE) system serves gloveboxes and Intermediate Level Cells (ILCs) - tightly sealed process enclosures that handle corrosive chemicals and radiological materials, and which are equipped with inlet and outlet HEPA filters. These enclosures serve as the primary confinement zone boundary. Secondary and tertiary confinement zones are maintained by other ventilation exhaust systems. Those gloveboxes that contain inventories above Hazard Category 3 thresholds of DOE-STD-1027-92 are credited as follows: • Provide a passive confinement function that isolates radioactive materials from the facility workers (SS function). • Provide a passive confinement function that allows the Off-Gas Exhaust System to sweep the glovebox of any process flammable gases to prevent a flammable gas explosion (SS function). Facility gloveboxes are administratively maintained at a vacuum of 0.5 to 1.0 in. wc vacuum relative to the surrounding space. The OGE system fans have abundant capacity to induce an inward air flow in the event of an open gloveport or passthrough in order to protect facility workers. Gap Analysis No Gap.	
1.2 Materials of construction should be appropriate for normal, abnormal and accident conditions.	[DOE Guidance Document does not provide any specific evaluation guidance discussion for this criteria]	DOE-HDBK-1169 (2.2.5) ASME AG-1
	The OGE system ductwork is fabricated from stainless steel pipe, either grade 304 LC (low carbon) or grade 347 . The material was selected to be resistant to corrosion resulting from chemical fumes, an anticipated effluent of laboratory gloveboxes. System dampers are also constructed from stainless steel with chemically resistant valve trim. The filter housings are also constructed from grade 304 stainless steel and use neoprene gaskets for chemical resistance. The system fans are constructed from carbon steel with applied protective coatings. Recent ultrasonic pipe thickness measurements on the OGE main exhaust headers indicated that the original wall thickness has negligible degradation from corrosion. Gap Analysis No Gap.	

Evaluation Criteria	Discussion	Reference
1.3 Exhaust system should withstand anticipated normal, abnormal and accident system conditions and maintain confinement integrity.	As required by accident analysis to prevent accident release.	DOE-HDBK-1169 (2.4) ASHRAE Design Guide
	The OGE system facilitates the confinement feature of the facility gloveboxes. The system is of large physical size spanning many areas of the building, such that one local accident event would not have an overall effect on the system operation. The system is not credited in the DSA with surviving an NPH (earthquake) event . The HEPA filter housings are located in a dedicated filter room which is segregated from the common accident initiator (flammable gas). The HEPA filter housings are a totally enclosed design. Process flammable gas generated in an individual glovebox would be diluted many times below the lower flammable limit prior to entering the filter housing. Thus an explosion involving the OGE filter housing is not credible. Furthermore, the OGE filters do not constitute the final filtration boundary prior to release to the environment. The OGE system discharges to the SRNL Sand Filter offering defense-in-depth protection. <u>Gap Analysis</u> No Gap.	
1.4 Confinement ventilation systems shall have appropriate filtration to minimize release.	Address: 1) Type of filter (e.g., HEPA, sand, sintered metal); 2) Filter sizing (flow capacity and pressure drop); 3) Decontamination Factor vs. accident analysis assumptions.	ASME AG-1 DOE-HDBK-1169 (2.2.1)
	The OGE effluent is filtered by two stages of individually tested HEPA filters in series. Prior to receipt the filters are tested at the Independent Filter Testing Facility (FTF) to confirm an efficiency of at least 99.97% for a decontamination factor DF = 3333. Decontamination factor has not been considered in the facility DSA. The filters are credited with confinement function only, not dose reduction. A second set of redundant filters are installed in parallel as a standby exhaust path. Each HEPA filter bank is preceded by a 304 stainless steel moisture separator that also serves as a pre-filter. The HEPA filters are Flanders size GG-F (24x24x11.5) gel-seal filters rated for 1500 cfm at 1.3 in.w.c. maximum initial pressure drop, which is adequate for the maximum rated OGE fan capacity of 1100 cfm. Gloveboxes and ILCs are equipped with outlet HEPA filters to minimize material build-up in the exhaust system ductwork. Gloveboxes and ILCs are also equipped with inlet HEPA filters. <u>Gap Analysis</u> No Gap.	

Evaluation Criteria	Discussion	Reference
2 - Ventilation System – Instrumentation & Control		
2.1 Provide system status instrumentation and/or alarms.	Address key information to ensure system operability (e.g., system delta-P, filter pressure drop).	ASME AG-1 DOE-HDBK-1169 ASHRAE Design Guide (Section 4)
	Differential pressure gauges are installed to measure room to glovebox DP for all facility gloveboxes. Each of the two parallel filter trains in the OGE main HEPA filter bank has installed differential pressure instrumentation to measure filter housing DP on a routine basis, and to measure individual HEPA filter DP on an as-needed basis. Each OGE sub-system has installed flow instrumentation indicating total exhaust airflow rate. Exhaust air temperature indication is not required. The system handles ambient, conditioned air exhausted from the laboratory rooms via the gloveboxes. A pressure indicator is installed on each OGE sub-system to measure system static pressure. These pressure indicators are monitored daily as a TSR surveillance requirement. A local transmitter installed in each OGE sub-system also sends a pressure signal to the control room for separate indication and to activate a low vacuum alarm. <u>Gap Analysis</u> Gap Number 19: Discretionary Gap - Not all glovebox are provided with outlet HEPA filter ΔP instrumentation. Gap Number 20: Discretionary Gap - Not all gloveboxes are provided with exhaust flow rate instrumentation.	
2.2 Interlock supply and exhaust fans to prevent positive pressure differential.	[DOE Guidance Document does not provide any specific evaluation guidance discussion for this criteria]	DOE-HDBK-1169 ASHRAE Design Guide (Section 4)
	The Off-Gas System is not equipped with a supply fan. <u>Gap Analysis</u> No Gap.	
2.3 Post accident indication of filter break-through.	Instrumentation supports post accident planning and response; should be considered critical instrumentation for SC.	TECH-34
	The OGE system effluent is monitored by an isokinetic sampling system and a Stack Air Activity Alarm system at the discharge of the SRNL Sand Filter that reports to the Control Room. The air at the inlet to the SRNL Sand Filter is also monitored and alarmed in the Control Room. <u>Gap Analysis</u> No Gaps	

Evaluation Criteria	Discussion	Reference
2.4 Reliability of control system to maintain confinement function under normal, abnormal and accident conditions.	Address, for example, impacts of potential common mode failures from events that would require active confinement function.	DOE-HDBK-1169 (2.4)
	The accidents evaluated by this report are as follows: Explosion - Glovebox Overpressurization Explosion - Distributed Flammable Gas Drop / Spill Process Explosion - Unstable Lab Chemical or Process Flammable Gas or VOCs The relevant accident for the OGE system is Explosion - Glovebox Overpressurization. From the facility DSA accident analysis - “Expansion volume cylinders, gas cylinders, positive displacement pumps, or other lab equipment etc., explosive/ pyrophoric material explodes inside glovebox resulting in breach of contaminated boundaries. The active ventilation feature of the OGE system is expected to remain operable following a glovebox breach. An open gloveport caused by a breached glove is an anticipated event, and the OGE system is expected to continue to prevent the release of the glovebox contents following this event. An explosion causing a breached glovebox would have negligible effect on the system fans and filters, because this equipment is located in fan and filter rooms respectively, a significant distance from the glovebox laboratory modules. Glovebox exhaust is typically transported by small bore pipe which connects to the main exhaust header, fabricated from large bore schedule 10 pipe. This provides a robust system which is resistant to damaging pressure waves emanating from a glovebox explosion that are dissipated over the long pipe run to reach the HEPA filter housing. The system has redundant, parallel HEPA filters to enhance post accident reliability. The two OGE fans are aligned as one operating, one in standby to provide redundancy. The fans are operated from the control room. Each fan has an automatic discharge damper to prevent backflow through the idle fan. The OGE fans are provided with standby power feed to continue operation following a failure of normal power. <u>Gap Analysis</u> No Gap.	
2.5 Control components should fail safe.	[DOE Guidance Document does not provide any specific evaluation guidance discussion for this criteria]	DOE-HDBK-1169 (2.4)
	The OGE fans are controlled from the facility control room. In the case of fan failure, the associated discharge damper closes automatically to preclude backflow as the standby fan is placed in service. Operation of the fans is not credited in the DSA. <u>Gap Analysis</u> Gap Number 21: Discretionary Gap - Failure of online fan does not automatically start the Standby fan.	

Evaluation Criteria	Discussion	Reference
3 - Resistance to Internal Events – Fire		
3.1 Confinement ventilation systems should withstand credible fire events and be available to operate and maintain confinement.	Required for new facilities; as required by the accident analysis for existing facilities (discretionary). Must address protection of filter media.	DOE-HDBK-1169 (10.1) DOE-STD-1066
	As discussed in Table 4-3 transmittal letter SRNL-ROE-2007-00063, Attachment 4, Table 1, this evaluation criteria is NOT APPLICABLE. Per Ventilation System Evaluation Guidance for Safety-Related and Non-Safety Related Systems, Revision 0, January 2006, Page 21 and 22 Discussion, the evaluation of internal fire events for an existing facility is only required if the accident analysis takes credit for the active confinement ventilation system.	
3.2 Confinement ventilation systems should not propagate spread of fire.	Required for new facilities; as required by the accident analysis for existing facilities (discretionary). Address fire barriers, fire dampers arrangement.	DOE-HDBK-1169 (10.1) DOE-STD-1066
	As discussed in Table 4-3 transmittal letter SRNL-ROE-2007-00063, Attachment 4, Table 1, this evaluation criteria is NOT APPLICABLE. Per Ventilation System Evaluation Guidance for Safety-Related and Non-Safety Related Systems, Revision 0, January 2006, Page 21 and 22 Discussion, the evaluation of internal fire events for an existing facility is only required if the accident analysis takes credit for the active confinement ventilation system.	

Evaluation Criteria	Discussion	Reference
4 - Resistance to External Events – Natural Phenomena – Seismic		
4.1 Confinement ventilation systems should safely withstand earthquakes.	If the active CVS system is not credited in a seismic accident condition there is no need to evaluate that performance and/or design attribute for the confinement ventilation system (discretionary). Also, any seismic impact on the confinement ventilation system performance will be based on the current functional requirements in the DSA. NOTE: Seismic requirements may apply to Defense-in-Depth items indirectly for the protection of safety SSCs.	ASME AG-1 (AA) DOE O 420.1B DOE-HDBK-1169 (9.2)
	As discussed in Table 4-3 transmittal letter SRNL-ROE-2007-00063, Attachment 4, Table 1, this evaluation criteria is NOT APPLICABLE. Per 2004-2 Ventilation System Evaluation Guidance Addendum, March 6, 2007, Caution 4 and Ventilation System Evaluation Guidance for Safety-Related and Non-Safety Related Systems, Revision 0, January 2006, Page 22 Discussion, the evaluation of seismic events is only required if the accident analysis takes credit for the active confinement ventilation system during or after the NPH event.	

Evaluation Criteria	Discussion	Reference
5 - Resistance to External Events – Natural Phenomena – Tornado/Wind		
5.1 Confinement ventilation systems should safely withstand tornado depressurization.	If the active CVS is not credited in a tornado condition there is no need to evaluate that performance and/or design attribute for the confinement ventilation system (discretionary). Also, any tornado impact on the confinement ventilation system performance will be based on the current functional requirements in the DSA.	DOE O 420.1B DOE-HDBK-1169 (9.2)
	As discussed in Table 4-3 transmittal letter SRNL-ROE-2007-00063, Attachment 4, Table 1, this evaluation criteria is NOT APPLICABLE. Per 2004-2 Ventilation System Evaluation Guidance Addendum, March 6, 2007, Caution 4 and Ventilation System Evaluation Guidance for Safety-Related and Non-Safety Related Systems, Revision 0, January 2006, Pages 22 and 23 Discussion, the evaluation of tornado and wind events is only required if the accident analysis takes credit for the active confinement ventilation system during or after the NPH event.	
5.2 Confinement ventilation systems should withstand design wind effects on system performance.	If the active CVS is not credited in a wind condition there is no need to evaluate that performance and/or design attribute for the confinement ventilation system (discretionary). Also, any wind impact on the confinement ventilation system performance will be based on the current NP analysis in the DSA.	DOE O 420.1B DOE-HDBK-1169 (9.2)
	As discussed in Table 4-3 transmittal letter SRNL-ROE-2007-00063, Attachment 4, Table 1, this evaluation criteria is NOT APPLICABLE. Per 2004-2 Ventilation System Evaluation Guidance Addendum, March 6, 2007, Caution 4 and Ventilation System Evaluation Guidance for Safety-Related and Non-Safety Related Systems, Revision 0, January 2006, Pages 22 and 23 Discussion, the evaluation of tornado and wind events is only required if the accident analysis takes credit for the active confinement ventilation system during or after the NPH event.	

Evaluation Criteria	Discussion	Reference
6 - Other NP Events (eg. flooding, precipitation)		
6.1 Confinement ventilation system should withstand other NP events considered credible in the DSA where the confinement ventilation system is credited.	If the active confinement ventilation system is not credited for this event there is no need to evaluate that performance and/or design attribute for the confinement ventilation system (discretionary). Also, any impact on the confinement ventilation system performance will be based on the current NP analysis in the DSA.	DOE O 420.1B DOE-HDBK-1169 (9.2)
	As discussed in Table 4-3 transmittal letter SRNL-ROE-2007-00063, Attachment 4, Table 1, this evaluation criteria is NOT APPLICABLE. Per 2004-2 Ventilation System Evaluation Guidance Addendum, March 6, 2007, Caution 4 and Ventilation System Evaluation Guidance for Safety-Related and Non-Safety Related Systems, Revision 0, January 2006, Page 23 Discussion, the evaluation of other NPH events is only required if the accident analysis takes credit for the active confinement ventilation system during or after the NPH event.	

Evaluation Criteria	Discussion	Reference
7 - Range Fires / Dust Storms		
7.1 Administrative controls should be established to protect confinement ventilation systems from barrier threatening events.	Ensure appropriately thought out response to external threat is defined (e.g. pre-fire plan).	DOE O 420.1B
	The Savannah River Forestry Department is responsible for fire fighting efforts in regards to wildland fires. They also have a program of controlled burns and mechanical thinning of underbrush to limit or prevent wildland fires spreading out of control. If the fire encroaches upon SRNL, the Savannah River Site Fire Department will direct extinguishing efforts. Building 773-A has a current Fire Pre Plan and has procedures to reduce confinement ventilation system air flow (originally develop for electrical system maintenance) that will minimize soot loading of the filters in the ventilation systems. Reference: AOP-06-007 <u>Gap Analysis</u> No Gap. Administrative controls are sufficient to protect the confinement ventilation systems for barrier threatening events.	

Evaluation Criteria	Discussion	Reference
8 - Testability		
8.1 Design supports the periodic inspection and testing of filters and housing, and test and inspections are conducted periodically.	Ability to test for leakage per intent of N510.	DOE-HDBK-1169 (2.3.8) ASME AG-1 ASME N510
	The OGE system HEPA filter housings are totally enclosed bag-in/bag-out units with gel-seal technology. The filter housing has all of the features prescribed in ASME N510, Section 10 to facilitate in-place HEPA filter testing, i.e injection ports and sample ports to support HEPA filter aerosol testing. In-place leak testing of HEPA filter installation is performed in accordance with Manual 2Y1 “HEPA Filter Testing Procedures”, Procedure 104 “General Surveillance Testing of HEPA Filters”. In-place leak testing is performed at scheduled intervals for installed testable HEPA filter systems to detect deterioration of filters, gaskets or other causes that could result in leaks. The facility has established a TSR surveillance requirement to perform in place aerosol testing of the HEPA filters at 18 month intervals. <u>Gap Analysis</u> No Gap.	
8.2 Instrumentation required to support system operability is calibrated.	Credited instrumentation should have specified calibration / surveillance requirements. Non-safety instrumentation should be calibrated as necessary to support system functionality.	DOE-HDBK-1169 (2.3.8)
	DSA-credited instrumentation consists of the Section B/F OGE Header Pressure Indicator and the Section C OGE Header Pressure Indicator, which are classified as Safety Significant. These instruments sense the exhaust header static pressure (vacuum) which provides the credited indication of OGE airflow required to sweep flammable gases from the gloveboxes in Sections B, F and C. The DSA requires these instruments to be calibrated and tested periodically to verify accuracy and operability. The TSR contains a surveillance requirement to calibrate these instruments every 18 months. The TSR Linking Document specifies facility procedure TE-48-043, "(TSR) Functional Check of B & C OGE Pressure Indicators" to perform the calibration. Additional non-DSA credited OGE system instrumentation is calibrated at less frequent intervals. <u>Gap Analysis</u> No Gap.	

Evaluation Criteria	Discussion	Reference
8.3 Integrated system performance testing is specified and performed.	Required responses assumed in the accident analysis must be periodically confirmed including any time constraints.	DOE-HDBK-1169 (2.3.8)
	The operating and standby OGE fans are interchanged monthly using an approved operating procedure. The system static pressure is monitored twice daily by the facility operator round sheets. Each glovebox served by the system is monitored locally for specified operating differential pressure prior to and during use by laboratory personnel. No additional integrated system performance testing for the OGE system is currently done because these actions provide frequent indication of adequate performance. <u>Gap Analysis</u> No Gap	

Evaluation Criteria	Discussion	Reference
9 - Maintenance		
9.1 Filter service life program should be established.	Filter life (shelf life, service life, total life) expectancy should be determined. Consider: filter environment, maximum delta-P, radiological loading, age, and potential chemical exposure.	DOE-HDBK-1169 (3.1 & App C)
	HEPA filter life expectancy is determined according to SRS Site Standard 15888, "HEPA Filter Requirements". The maximum allowable life (shelf life + in-service life) of a HEPA filter used at SRS shall not exceed 10 years. The system HEPA filters are replaced at an interval within the 10 year guideline. Periodic in-place leak tests are performed to ensure that the filters are fulfilling their confinement function. The filters must meet the leak test acceptance criteria to be placed/remain in service. Filter environment is considered. The OGE filters handle glovebox exhaust. Air drawn into the gloveboxes is ambient temperature indoor conditioned air with a relative humidity ~ 50%. Therefore moisture accumulation that will adversely affect the filter media is not expected. Additionally, the filter housing is equipped with demisters at the inlet. Moisture laden filters are replaced when discovered. Glovebox inlet and outlet HEPA filters (non-testable) are replaced at more frequent intervals based on the severity of the service of the specific glovebox. Those exposed to moisture or chemicals are replaced after a shorter service life. <u>Gap Analysis</u> No Gap	

Evaluation Criteria	Discussion	Reference
10 - Single Failure		
10.1 Failure of one component (equipment or control) shall not affect continuous operation.	Address potential failures (example failures - fan, backup power supply, switchgear).	DOE O 420.1B (Facility Safety, Chapter I, Sec. 3.b(8))
	The two OGE fans in each of the two OGE sub-systems are aligned as one operating, one in standby to provide redundancy. A fan failure is indicated in the control room as a low system static pressure alarm. The standby fan is started manually to restore system operability. A standby diesel generator automatically supplies backup power to the OGE fans and control equipment upon a loss of normal power. The system backup power feature is not credited in the DSA with a preventive or mitigative function following a design basis accident. The OGE fans are controlled from the facility control room. In the case of fan failure, the associated discharge damper closes automatically to preclude backflow as the standby fan is placed in service. Operation of the fans is not credited in the DSA. However, this evaluation to Safety Class criteria identifies a system deficiency, i.e. fan failure does not automatically start the standby fan. Operator action is required. All four OGE fans receive backup power from a single diesel generator, the reliability of the OGE system to prevent the over pressurization or explosion would be enhanced if the OGE fans were supplied backup power from two separate diesel generators. This would reduce the probability of occurrence of two of the five events to be evaluated from Table 4-3. <u>Gap Analysis</u> Gap Number 21: Discretionary Gap - Failure of online fan does not automatically start the Standby fan. Gap Number 22: Discretionary Gap - Fan MCCs are fed by the same D/G.	

Evaluation Criteria	Discussion	Reference
10.2 Automatic backup electrical power shall be provided to all critical instruments and equipment required to operate and monitor the confinement ventilation system.	[DOE Guidance Document does not provide any specific evaluation guidance discussion for this criteria]	DOE-HDBK-1169 (2.2.7)
	A standby diesel generator automatically supplies backup power to the OGE fans and control equipment upon a loss of normal power. The control room OGE system static pressure alarm and fan status indicators are provided with automatic back-up power. Three (3) local glovebox static pressure alarms and (1) local OGE system branch pressure alarm do not have the backup power feature. Local instrumentation (glovebox differential pressure indicators) does not depend on back-up power for operation. The system backup power feature is not credited in the DSA with a preventive or mitigative function following a design basis accident. <u>Gap Analysis</u> No Gap	
10.3 Backup electrical power shall be provided to all critical instruments and equipment required to operate and monitor the confinement ventilation system.	NOTE: Safety Class is addressed through previous line.	DOE-HDBK-1169 (2.2.7)
	This evaluation criteria is NOT APPLICABLE, as it is an SS-only criteria. SRNL confinement ventilation systems are evaluated to SC criteria.	

Evaluation Criteria	Discussion	Reference
11 - Other Credited Functional Requirements		
11.1 Address any specific functional requirements for the confinement ventilation system (beyond the scope of those above) credited in the DSA.	[DOE Guidance Document does not provide any specific evaluation guidance discussion for this criteria]	10 CFR 830, Subpart B
	None <u>Gap Analysis</u> No Gaps	

Evaluation Criteria	Discussion	Reference
0 - Ventilation System Description & References		
0.1 System Description	N/A	N/A
	System Description The Process Hood Exhaust (PHEX) systems are two independent systems serving Sections B&C. Each system serves various enclosures, rooms or cells in the respective section of the building. The Section B&C systems (Figure A) have single or double stage HEPA filtration, and normal and standby exhaust fans. Both systems discharge to the SRNL Fan Housing Sand Filter (FHSF) system. All the fans are provided with standby power. The building framing, roof slabs and floor slabs have been qualified to PC-3. The building shell walls (windows and transite panels) have been qualified to PC-1. Interior partitions, systems and components are qualified to a mixture of PC-1 and PC-2.	

Evaluation Criteria	Discussion	Reference
0.2 System References	N/A	N/A

Standards
- o DuPont Specifications 3027, 3017, 8728.
- o DuPont standard H16J, Flexible connections
- o M-SPP-G-00243, HEPA Filter Specification
- o SRS Engineering Standard 15888, HEPA Filter Requirements
- o ANSI/ASME NQA-1, Quality Assurance Program Requirements for Nuclear Facilities, 1997
- o DOE-STD-3020-2005, DOE Technical Standard - Specification for HEPA Filters Used by DOE Contractors
- o DOE-STD-3025-2007, DOE Technical Standard - Quality Assurance Inspection and Testing of HEPA Filters
- o UL 586, UL Standard for Safety, High Efficiency, Particulate, Air Filter Units, 1996.

References

System Design Descriptions (SDDs):
- o G-SYD-A-00005, PHEX System Design Description
- o M-SYD-A-00024, IA, PLTA, and Compressor Alternate CW

Air Balance Test Procedures (TPs):
- o TP-02-773A-BWING-01, Sec B Air Balance Test Procedure
- o TP-03-773A-CWING-01, Sec C Air Balance Test Procedure
- o 5Q1.2 Procedure 484, Building Air Survey

Operator Round Sheets:
- o ROD-OPS-2002-002 - Control Area Operator (CAO) Round Sheets
- o ROD-OPS-2002-003 - Facility Operator (FO) Round Sheets

Miscellaneous
- o SRNL-ESD-2007-00017, Structural Integrity Program Scope, Resources & Estimate, 02/07/07
- o SRNL-ROE-2007-00063, Table 4.3 submittal
- o WSRC-SA-2, Revision 3, February 2007, SRNL Technical Area Documented Safety Analysis (DSA)
- o WSRC-TS-97-00014, SRNL Technical Area (TA) Technical Safety Requirements (TSRs)

P&IDs
- o M-M6-A-0191, CHEX Diversion Exhaust P&ID - Section B
- o M-M6-A-0192, CHEX Diversion Exhaust P&ID - Section C

Evaluation Criteria	Discussion	Reference
1 - Ventilation System – General Criteria		
1.1 Pressure differential should be maintained between zones and atmosphere.	Number of zones as credited by accident analysis to control hazardous material release; demonstrate by use considering potential in-leakage.	DOE-HDBK-1169 (2.2.9) ASHRAE Design Guide
	The Sections B&C zone flows and ventilation system interactions are described in the specific SDD documents (see references in Section 0.2). Differential pressures (DPs) are not measured directly, but are maintained between zones by monitoring and balancing air flows. Periodic monitoring is conducted, including hood face velocities (Procedure 4Q/401) and air flow directions (Procedure 5Q1.2/484). Air balances are regularly conducted on all ventilation systems within a building section to verify facility design basis flows, as documented by the Sections B&C Air Balance test procedures (see references in Section 0.2). Key system parameters are recorded on a daily and weekly basis (operator rounds shown below) which allows monitoring of ventilation system function and performance. The PHEX Systems are designed to maintain the primary containment zones at a negative pressure with respect to surrounding areas such that a positive airflow is maintained into the primary confinement zones from the secondary confinement zones. Confinement Zones o Primary Confinement — Lab Hoods / Gloveboxes / Ducting through 1st testable HEPA filter stage o Secondary Confinement — Labs / Filter Rooms / Equipment Rooms / Service Corridor o Tertiary Confinement — Personnel Corridors / Offices / General Service Floor Area o Administrative Area — Sections A&D / Offices <u>Gap Analysis</u> No Gap - Pressure differentials are not measured directly, but are maintained between zones by monitoring and balancing air flows.	
1.2 Materials of construction should be appropriate for normal, abnormal and accident conditions.	[DOE Guidance Document does not provide any specific evaluation guidance discussion for this criteria]	DOE-HDBK-1169 (2.2.5) ASME AG-1
	Sections B&C PHEX Systems exhaust air from labs with enclosures with a higher potential to release radionuclides and that require higher levels of filtration. PHEX ducting extends from lab modules to the primary filter plenum. 1/8" thick stainless steel blanks with 1/8" thick neoprene gaskets are used to separate portions of the primary and secondary filter plenums for CHEX or PHEX service. PHEX fans in Section B are fabricated from stainless steel. PHEX fans in Section C are fabricated from epoxy coated steel. 16 gauge stainless steel ducting carries the filtered exhaust to PHEX fans on the roof. The PHEX fans discharge to the Sand Filter inlet ducting (stainless steel). <u>Gap Analysis</u> No Gap - All materials of construction are appropriate for normal, abnormal and accident conditions. Inspections conducted as part of the Structural Integrity Program on the inside of the Section B&C HEPA ductwork to date have shown no reasons why the ventilation system cannot perform it's intended function during all conditions.	

Evaluation Criteria	Discussion	Reference
1.3 Exhaust system should withstand anticipated normal, abnormal and accident system conditions and maintain confinement integrity.	As required by accident analysis to prevent accident release.	DOE-HDBK-1169 (2.4) ASHRAE Design Guide
	The 773-A Building ventilation system consists of intake and exhaust ducting, dampers, fans, filters banks, associated controls and instrumentation. The 773-A Building ventilation system minimizes the potential release of radioactive contamination in the event of a process leak. The ventilation system is designed to maintain the building at a slight negative pressure with respect to its surrounding. The PHEX systems, along with the CHEX and OGE systems, are designed to maintain the primary containment zones at a negative pressure with respect to surrounding areas such that a positive airflow is maintained into the primary confinement zones from the secondary confinement zones. During normal operation these multiple systems run continuously within defined performance parameters to maintain the proper containment air flow. All exhaust air flows except HV systems are filtered through HEPA filters. The PHEX, OGE, and CHEX (Diversion Exhaust) systems exhaust to the Sand Filter (FHSF) system. The 773-A PHEX ventilation fans are located on the roof and are exposed to the weather. Ventilation ductwork from Bldg. 773-A to the FHSF Sand Filter is exposed to the weather. All other fans and ventilation components are located indoors. The ventilation system components are adequate for normal and most abnormal operation. Abnormal conditions include power failure, partial shutdown, or activation of the CHEX (Diversion Exhaust) system. In the event of a power failure, conditioned air will be supplied to clean areas only. All supply systems receiving outside air have freeze stats to automatically shut the fans down to prevent component damage due to freezing temperatures. Office and laboratory supply fans share a common outside inlet and windbox. Supply air (HVAC) fans that supply laboratory spaces have automatic dampers on the fan discharge that close if the fan is de-energized to prevent the possibility of the backflow of air from the laboratories to the inlet of the office supply fans. Partial shutdown of ventilation systems is addressed by operating procedures TO-06-011, Reduction/Restoration of C Section CHEX and TO-06-015, Reduction/Restoration of B Section CHEX. Activation of the CHEX Diversion system shuts down approximately 2/3rds of the Sections B&C supply air (HVAC) fans to insure that the facility air balance is maintained. The following accident scenarios are considered. Process Explosion - Unstable Lab Chemical or Accumulation of Process Flammable Gas or VOCs with no consequential fire - Ventilation systems would operate normally to maintain a positive pressure differential into the effected lab. Exhaust flows through HEPA filtration are believed adequate to contain mobilized contaminants. If the HEPA plugs, the contaminants would be contained within the lab and ductwork. If the HEPA is compromised and contamination is detected in the B or C stack, the CHEX Diversion system would be placed in service to direct exhaust air to the Sand Filter. If a filter housing or ducting is compromised, the RREX (Exhaust) systems would contain the contamination. Fire detection systems would alert Control Room Operators who would shut down ventilation systems according to procedures. Lab/Cell walls, Gloveboxes, and ductwork would passively contain contaminants. Explosion - Glovebox Overpressurization - same as above. Explosion - Accumulation of Distributed Flammable Gas with no consequential fire - same as above. Drop / Spill - Ventilation systems would operate normally to draw lab/cell air towards hoods. Normal room infiltration would	

Evaluation Criteria	Discussion	Reference
	contain the spill to the effected lab/cell. Exhaust flows through HEPA filtration are believed adequate to contain mobilized contaminants. If the HEPA plugs, the contaminants would be contained within the lab and ductwork. If the HEPA is compromised and contamination is detected in the B or C stack, the Diversion system would be placed in service to direct exhaust air to the Sand Filter. If filter housings or ducting are compromised, the RREX systems would contain the contamination. <u>Gap Analysis</u> No Gaps.	
1.4 Confinement ventilation systems shall have appropriate filtration to minimize release.	Address: 1) Type of filter (e.g., HEPA, sand, sintered metal); 2) Filter sizing (flow capacity and pressure drop); 3) Decontamination Factor vs. accident analysis assumptions. Separate Sections B&C PHEX systems utilize parallel banks of one pre-filter and either one or two HEPA filters in series. Only the "slide in/tape in place" configuration is used. HEPA Filters used are listed below. A review of air balance data indicates that all HEPA filters are properly sized. Prior to receipt the filters are tested at the Independent Filter Testing Facility (FTF) to confirm an efficiency of at least 99.97% for a decontamination factor DF = 3333. Decontamination factor has not been considered in the facility DSA. The filters are credited with confinement function only, not dose reduction. HEPA filters "slide in/tape in place" - 24x30x11-1/2, 1250 cfm @ 1.0 in wc, plywood frame, back neoprene gasket , Stores code 32.1850.04, Flanders Filters Drawing Z95295, Rev. B Prefilters - "slide in/tape in place" - 20x25x2 (stores code 50.16130), Am Filter 301 or Farr Co 30/30 Class 1 <u>Gap Analysis</u> No gaps.	ASME AG-1 DOE-HDBK-1169 (2.2.1)

Evaluation Criteria	Discussion	Reference
2 - Ventilation System – Instrumentation & Control		
2.1 Provide system status instrumentation and/or alarms.	Address key information to ensure system operability (e.g., system delta-P, filter pressure drop).	ASME AG-1 DOE-HDBK-1169 ASHRAE Design Guide (Section 4)
	The Sections B&C PHEX systems (two fans per section) are instrumented on the cabinet status boards (#2 for B, #5 for C) in the C041 CR to show fan status and permit fan starting and stopping. The fan low suction pressure alarms are routed to the C041 CR through the PSV control system. See CHEX system for HEPA DP indications. <u>Gap Analysis</u> No Gaps	
2.2 Interlock supply and exhaust fans to prevent positive pressure differential.	[DOE Guidance Document does not provide any specific evaluation guidance discussion for this criteria]	DOE-HDBK-1169 ASHRAE Design Guide (Section 4)
	The Section B&C PHEX exhaust fans (two per section) are not interlocked with their HVAC supply fan counterparts to prevent positive DPs. <u>Gap Analysis</u> Gap Number 3: Discretionary Gap - Interlocks are not provided between the supply and exhaust systems.	
2.3 Post accident indication of filter break-through.	Instrumentation supports post accident planning and response; should be considered critical instrumentation for SC.	TECH-34
	Section B&C PHEX exhaust systems both have low HEPA filter DP indicators, indicating break-through, and stack activity monitoring. The Sand Filter Stack is equipped with an isokinetic sampling system to continuously monitor exhaust air flow and activity. <u>Gap Analysis</u> No Gap - Post accident monitoring capabilities are installed as indicated above.	

Evaluation Criteria	Discussion	Reference
2.4 Reliability of control system to maintain confinement function under normal, abnormal and accident conditions.	Address, for example, impacts of potential common mode failures from events that would require active confinement function.	DOE-HDBK-1169 (2.4)
	Sections B&C each contain two parallel PHEX fans controlled from the C041 CR. Normally one fan operates continuously and one fan is in standby. If the exhaust plenum pressure drops to 1.5 in wc the primary fan is de-energized and the standby fan is energized. Abnormal conditions include power failure and partial shutdown. Activation of the CHEX (Diversion) system does not affect the PHEX systems. In the event of a power failure, standby power is supplied to all PHEX fans. The standby fan in each section will restart automatically. Under the four accident scenarios, the PHEX systems would function normally. The Sections B&C PHEX exhaust systems each have redundant fans that are powered with standby power. Operation of the systems is controlled by operating procedures. System control is maintained during abnormal and accident conditions by AOPs and EOPs. <u>Gap Analysis</u> No Gap -The Sections B&C PHEX fans can be controlled from the C041 CR under all conditions.	
2.5 Control components should fail safe.	[DOE Guidance Document does not provide any specific evaluation guidance discussion for this criteria]	DOE-HDBK-1169 (2.4)
	The Sections B&C PHEX exhaust system fans have discharge dampers that fail closed on loss of instrument air and power. <u>Gap Analysis</u> No Gap - The PHEX fan damper failure mode is appropriate to prevent backflow from the Sand Filter.	

Evaluation Criteria	Discussion	Reference
3 - Resistance to Internal Events – Fire		
3.1 Confinement ventilation systems should withstand credible fire events and be available to operate and maintain confinement.	Required for new facilities; as required by the accident analysis for existing facilities (discretionary). Must address protection of filter media.	DOE-HDBK-1169 (10.1) DOE-STD-1066
	As discussed in Table 4-3 transmittal letter SRNL-ROE-2007-00063, Attachment 4, Table 1, this evaluation criteria is NOT APPLICABLE. Per Ventilation System Evaluation Guidance for Safety-Related and Non-Safety Related Systems, Revision 0, January 2006, Page 21 and 22 Discussion, the evaluation of internal fire events for an existing facility is only required if the accident analysis takes credit for the active confinement ventilation system.	
3.2 Confinement ventilation systems should not propagate spread of fire.	Required for new facilities; as required by the accident analysis for existing facilities (discretionary). Address fire barriers, fire dampers arrangement.	DOE-HDBK-1169 (10.1) DOE-STD-1066
	As discussed in Table 4-3 transmittal letter SRNL-ROE-2007-00063, Attachment 4, Table 1, this evaluation criteria is NOT APPLICABLE. Per Ventilation System Evaluation Guidance for Safety-Related and Non-Safety Related Systems, Revision 0, January 2006, Page 21 and 22 Discussion, the evaluation of internal fire events for an existing facility is only required if the accident analysis takes credit for the active confinement ventilation system.	

Evaluation Criteria	Discussion	Reference
4 - Resistance to External Events – Natural Phenomena – Seismic		
4.1 Confinement ventilation systems should safely withstand earthquakes.	If the active CVS system is not credited in a seismic accident condition there is no need to evaluate that performance and/or design attribute for the confinement ventilation system (discretionary). Also, any seismic impact on the confinement ventilation system performance will be based on the current functional requirements in the DSA. NOTE: Seismic requirements may apply to Defense-in-Depth items indirectly for the protection of safety SSCs.	ASME AG-1 (AA) DOE O 420.1B DOE-HDBK-1169 (9.2)
	As discussed in Table 4-3 transmittal letter SRNL-ROE-2007-00063, Attachment 4, Table 1, this evaluation criteria is NOT APPLICABLE. Per 2004-2 Ventilation System Evaluation Guidance Addendum, March 6, 2007, Caution 4 and Ventilation System Evaluation Guidance for Safety-Related and Non-Safety Related Systems, Revision 0, January 2006, Page 22 Discussion, the evaluation of seismic events is only required if the accident analysis takes credit for the active confinement ventilation system during or after the NPH event.	

Evaluation Criteria	Discussion	Reference
5 - Resistance to External Events – Natural Phenomena – Tornado/Wind		
5.1 Confinement ventilation systems should safely withstand tornado depressurization.	If the active CVS is not credited in a tornado condition there is no need to evaluate that performance and/or design attribute for the confinement ventilation system (discretionary). Also, any tornado impact on the confinement ventilation system performance will be based on the current functional requirements in the DSA.	DOE O 420.1B DOE-HDBK-1169 (9.2)
	As discussed in Table 4-3 transmittal letter SRNL-ROE-2007-00063, Attachment 4, Table 1, this evaluation criteria is NOT APPLICABLE. Per 2004-2 Ventilation System Evaluation Guidance Addendum, March 6, 2007, Caution 4 and Ventilation System Evaluation Guidance for Safety-Related and Non-Safety Related Systems, Revision 0, January 2006, Pages 22 and 23 Discussion, the evaluation of tornado and wind events is only required if the accident analysis takes credit for the active confinement ventilation system during or after the NPH event.	
5.2 Confinement ventilation systems should withstand design wind effects on system performance.	If the active CVS is not credited in a wind condition there is no need to evaluate that performance and/or design attribute for the confinement ventilation system (discretionary). Also, any wind impact on the confinement ventilation system performance will be based on the current NP analysis in the DSA.	DOE O 420.1B DOE-HDBK-1169 (9.2)
	As discussed in Table 4-3 transmittal letter SRNL-ROE-2007-00063, Attachment 4, Table 1, this evaluation criteria is NOT APPLICABLE. Per 2004-2 Ventilation System Evaluation Guidance Addendum, March 6, 2007, Caution 4 and Ventilation System Evaluation Guidance for Safety-Related and Non-Safety Related Systems, Revision 0, January 2006, Pages 22 and 23 Discussion, the evaluation of tornado and wind events is only required if the accident analysis takes credit for the active confinement ventilation system during or after the NPH event.	

Evaluation Criteria	Discussion	Reference
6 - Other NP Events (eg. flooding, precipitation)		
6.1 Confinement ventilation system should withstand other NP events considered credible in the DSA where the confinement ventilation system is credited.	If the active confinement ventilation system is not credited for this event there is no need to evaluate that performance and/or design attribute for the confinement ventilation system (discretionary). Also, any impact on the confinement ventilation system performance will be based on the current NP analysis in the DSA.	DOE O 420.1B DOE-HDBK-1169 (9.2)
	As discussed in Table 4-3 transmittal letter SRNL-ROE-2007-00063, Attachment 4, Table 1, this evaluation criteria is NOT APPLICABLE. Per 2004-2 Ventilation System Evaluation Guidance Addendum, March 6, 2007, Caution 4 and Ventilation System Evaluation Guidance for Safety-Related and Non-Safety Related Systems, Revision 0, January 2006, Page 23 Discussion, the evaluation of other NPH events is only required if the accident analysis takes credit for the active confinement ventilation system during or after the NPH event.	

Evaluation Criteria	Discussion	Reference
7 - Range Fires / Dust Storms		
7.1 Administrative controls should be established to protect confinement ventilation systems from barrier threatening events.	Ensure appropriately thought out response to external threat is defined (e.g. pre-fire plan).	DOE O 420.1B
	The Savannah River Forestry Department is responsible for fire fighting efforts in regards to wildland fires. They also have a program of controlled burns and mechanical thinning of underbrush to limit or prevent wildland fire spreading out of control. If the fire encroaches upon SRNL, the Savannah River Site Fire Department will direct extinguishing efforts. Building 773-A has a current Fire Pre Plan and has procedures to reduce confinement ventilation system air flow (originally developed for electrical system Maintenance) that will minimize soot loading of the filters in the ventilation systems. Reference: AOP-06-007 <u>Gap Analysis</u> No Gap - Administrative controls are sufficient to protect the confinement ventilation systems for barrier threatening events.	

Evaluation Criteria	Discussion	Reference
8 - Testability		
8.1 Design supports the periodic inspection and testing of filters and housing, and test and inspections are conducted periodically.	Ability to test for leakage per intent of N510.	DOE-HDBK-1169 (2.3.8) ASME AG-1 ASME N510
	Surveillance Requirements for the PHEX HEPA filters are specified in the SRNL TSR, WSRC-TS-97-00014, PHEX SR 4.2.3.1. All HEPA filter housings have the capability for in-place testing. This in-place test capability was added in the 1960's and testing points meet the intent of N510. The design of the tape-in-place housings discussed under Criteria 1.4 provides unique challenges in testing filter housing pressure boundary integrity. When the filter banks for multiple labs are manifolded together, the configuration does not ensure uniformity of aerosol challenge. Inspection of the housings is part of the Structural Integrity Program. The system is assessed for material buildup following a process event. B&C PHEX HEPA filters are tested every 18 months to verify that they have an efficiency of greater or equal to 99.5%. <u>Gap Analysis</u> Gap Number 4: Discretionary Gap - Tape-in-place HEPA filters do not meet the filter housing pressure boundary integrity testing requirements in N510.	
8.2 Instrumentation required to support system operability is calibrated.	Credited instrumentation should have specified calibration / surveillance requirements. Non-safety instrumentation should be calibrated as necessary to support system functionality.	DOE-HDBK-1169 (2.3.8)
	Separate Sections B&C PHEX systems have no calibration requirements in the TSR. Non-safety instrumentation is calibrated on an as-needed basis. <u>Gap Analysis</u> No Gap - The Sections B&C PHEX systems have no TSR calibration requirements.	
8.3 Integrated system performance testing is specified and performed.	Required responses assumed in the accident analysis must be periodically confirmed including any time constraints.	DOE-HDBK-1169 (2.3.8)
	Airflow direction is verified at key points within the building during scheduled inspections to verify that the ventilation systems are functioning as intended. Findings are forwarded to the Design Authority Engineer. No functional testing is required by the TSR of the B&C PHEX systems. <u>Gap Analysis</u> No Gap - The Sections B&C PHEX systems have no integrated system performance testing that is required.	

Evaluation Criteria	Discussion	Reference
9 - Maintenance		
9.1 Filter service life program should be established.	Filter life (shelf life, service life, total life) expectancy should be determined. Consider: filter environment, maximum delta-P, radiological loading, age, and potential chemical exposure.	DOE-HDBK-1169 (3.1 & App C)
	The Sections B&C PHEX HEPA filters are controlled by TO-06-014, Control of TSR HEPA AET and Engineering Standard 15888 (HEPA Filter Requirements) which is the basis of DOE-HDBK-1169 Appendix C. Maximum HEPA shelf life is three (3) years and maximum HEPA total life is ten (10) years. <u>Gap Analysis</u> No Gaps - The Sections B&C PHEX HEPA filter maximum service life of 10 years has been established and controlled by the SRNL HEPA Filter Database and Computerized Maintenance Management System. Nominal PHEX HEPA filter changeout plans are begun at seven (7) years (Computerized Maintenance Management System) to ensure compliance with the ten (10) year requirement.	

Evaluation Criteria	Discussion	Reference
10 - Single Failure		
10.1 Failure of one component (equipment or control) shall not affect continuous operation.	Address potential failures (example failures - fan, backup power supply, switchgear).	DOE O 420.1B (Facility Safety, Chapter I, Sec. 3.b(8))
	PHEX systems has redundent fans with separate control loops. Fans are provided power from separate motor control centers fed from segragated swtichgear but standby power is provided by the same Diesel Generator (794-A D/G). <u>Gap Analysis</u> Gap Number 15: Discretionary Gap - Fan MCCs are fed by the same D/G.	
10.2 Automatic backup electrical power shall be provided to all critical instruments and equipment required to operate and monitor the confinement ventilation system.	[DOE Guidance Document does not provide any specific evaluation guidance discussion for this criteria]	DOE-HDBK-1169 (2.2.7)
	In the event of a power failure, standby power will be provided to all Sections B&C PHEX fans. The PHEX fans that were running will restart automatically. The standby fans will be available for automatic standby service. <u>Gap Analysis</u> No Gap - Standby power is provided to both PHEX fans in each section.	
10.3 Backup electrical power shall be provided to all critical instruments and equipment required to operate and monitor the confinement ventilation system.	NOTE: Safety Class is addressed through previous line.	DOE-HDBK-1169 (2.2.7)
	This evaluation criteria is NOT APPLICABLE, as it is an SS-only criteria. SRNL confinement ventilation systems are evaluated to SC criteria.	

Evaluation Criteria	Discussion	Reference
11 - Other Credited Functional Requirements		
11.1 Address any specific functional requirements for the confinement ventilation system (beyond the scope of those above) credited in the DSA.	[DOE Guidance Document does not provide any specific evaluation guidance discussion for this criteria]	10 CFR 830, Subpart B
	None <u>Gap Analysis</u> No Gap	

Evaluation Criteria	Discussion	Reference
0 - Ventilation System Description & References		
0.1 System Description	N/A	N/A
	<u>System Description</u> The Sections B&C Shielded Area Regulated Room Exhaust (RREX) systems are two independent systems with single stage HEPA filtration and single exhaust fans that discharge to the 75 ft stack located at each section of the building. The fans are not provided with standby power. The Sections B&C Equipment Room Regulated Room Exhaust (RREX) systems are two independent systems with single stage HEPA filtration and single exhaust fans that discharge to the 75 ft stack located at each section of the building. The fans are not provided with standby power. The stack, building framing, roof slabs and floor slabs have been qualified to PC-3. The building shell walls (windows and transite panels) have been qualified to PC-1. Interior partitions, systems and components are qualified to a mixture of PC-1 and PC-2.	

Evaluation Criteria	Discussion	Reference
0.2 System References	N/A	N/A

Standards
- o DuPont Specifications 3027, 3017, 8728.
- o DuPont standard H16J, Flexible connections
- o M-SPP-G-00243, HEPA Filter Specification
- o SRS Engineering Standard 15888, HEPA Filter Requirements
- o ANSI/ASME NQA-1, Quality Assurance Program Requirements for Nuclear Facilities, 1997
- o DOE-STD-3020-2005, DOE Technical Standard - Specification for HEPA Filters Used by DOE Contractors
- o DOE-STD-3025-2007, DOE Technical Standard - Quality Assurance Inspection and Testing of HEPA Filters
- o UL 586, UL Standard for Safety, High Efficiency, Particulate, Air Filter Units, 1996.

References

Air Balance Test Procedures (TPs):
- o TP-02-773A-BWING-01, Sec B Air Balance Test Procedure
- o TP-03-773A-CWING-01, Sec C Air Balance Test Procedure
- o 5Q1.2 Procedure 484, Building Air Survey

Operator Round Sheets:
- o ROD-OPS-2002-002 - Control Area Operator (CAO) Round Sheets
- o ROD-OPS-2002-003 - Facility Operator (FO) Round Sheets

Miscellaneous
- o TO-06-005, Laboratory Services Department Non-TSR HEPA Filter Program
- o SRNL-ROE-2007-00063, Table 4.3 submittal
- o WSRC-SA-2, Revision 3, February 2007, SRNL Technical Area Documented Safety Analysis (DSA)

P&IDs
- o M-M6-A-0183, CHEX Normal Exhaust P&ID - Section B
- o M-M6-A-0170, CHEX Normal Exhaust P&ID - Section C
- o M-M6-A-0159, B and C RREX P&ID
- o ST5-20318, C-001 Filter Housing Plan
- o ST5-20319, B-001 Filter Housing Plan
- o W156597, Equipment Room Plan - Section B
- o W156520, Equipment Room Plan - Section C

Evaluation Criteria	Discussion	Reference
1 - Ventilation System – General Criteria		
1.1 Pressure differential should be maintained between zones and atmosphere.	Number of zones as credited by accident analysis to control hazardous material release; demonstrate by use considering potential in-leakage.	DOE-HDBK-1169 (2.2.9) ASHRAE Design Guide
	RREX (Equipment Room Exhaust) systems exhaust air from B/C001 to maintain pressure differentials between the equipment rooms and atmosphere. RREX (Shielded Area Exhaust) systems exhaust air from B/C005 to maintain pressure differentials between the shielded areas or HEPA filter rooms and atmosphere (service level). <u>Gap Analysis</u> No Gap - Both RREX Systems (Equipment Room & Shielded Area) maintain needed DPs with atmosphere.	
1.2 Materials of construction should be appropriate for normal, abnormal and accident conditions.	[DOE Guidance Document does not provide any specific evaluation guidance discussion for this criteria]	DOE-HDBK-1169 (2.2.5) ASME AG-1
	RREX (Equipment Room Exhaust) systems exhaust air from the B/C001 Equipment Rooms through HEPA filters to a fan in each of the equipment rooms. The fans are fabricated from carbon steel. The fans discharge to the building stacks. Ducting is 16 gauge galvanized steel. HEPA Filters are located in the Equipment Rooms. Filter frames are stainless steel. RREX (Shielded Area Exhaust) systems exhaust air from the B/C005 Shielded Area filter rooms through galvanized steel ducting to an exhaust fan in each of the equipment rooms. The fans are fabricated from carbon steel and discharge by stainless steel ducting to the Sand Filter supply duct on the roof. HEPA Filters are located in the B/C005 Shielded Area filter rooms. HEPA filter housings and inlet and discharge duct sections are manufactured from 304L stainless steel. <u>Gap Analysis</u> No Gap - RREX (Equipment Room & Shielded Area) materials of construction are appropriate for all conditions.	

Evaluation Criteria	Discussion	Reference
1.3 Exhaust system should withstand anticipated normal, abnormal and accident system conditions and maintain confinement integrity.	As required by accident analysis to prevent accident release.	DOE-HDBK-1169 (2.4) ASHRAE Design Guide
	During normal operation the Equipment Room and Shielded Area RREX systems run continuously within defined performance parameters to maintain the proper containment air flow. Exhaust air flows are filtered through HEPA filters. Abnormal conditions include power failure, partial shutdown, or activation of the CHEX (Diversion Exhaust) system. The RREX systems will not operate in the event of a power failure. There is one Shielded Area RREX fan and one Equipment Room RREX fan in each section with no standby. Partial shutdown of ventilation systems is addressed by operating procedures TO-06-011, Reduction/Restoration of Section C CHEX and TO-06-015, Reduction/Restoration of Section B CHEX. Activation of the CHEX Diversion system does not effect the RREX Systems. The following accident scenarios are considered. Process Explosion - Unstable Lab Chemical or Accumulation of Process Flammable Gas or VOCs with no consequential fire - If a PHEX or CHEX filter housing or ducting is compromised, the RREX (Exhaust) systems would contain the contamination. Fire detection systems would alert Control Room Operators who would shut down ventilation systems according to procedures. Explosion - Glovebox Overpressurization - same as above. Explosion - Accumulation of Distributed Flammable Gas with no consequential fire - same as above. Drop / Spill - If a PHEX or CHEX filter housing or ducting is compromised, the RREX systems would contain the contamination. <u>Gap Analysis</u> No Gap - Both RREX systems (Equipment Room & Shielded Area) should withstand abnormal and accident conditions.	

Evaluation Criteria	Discussion	Reference
1.4 Confinement ventilation systems shall have appropriate filtration to minimize release.	Address: 1) Type of filter (e.g., HEPA, sand, sintered metal); 2) Filter sizing (flow capacity and pressure drop); 3) Decontamination Factor vs. accident analysis assumptions.	ASME AG-1 DOE-HDBK-1169 (2.2.1)
	RREX (Equipment Room Exhaust) Systems Separate Sections B&C systems utilize Flanders fluid seal, side loading (C-4) frames configured for four single stage HEPA filters in a two high X two wide arrangement. Original Design Airflow is 6000 cfm and current operating airflow is approx 4000 cfm. The filter bank capacity is 6000 cfm (Four 1500 cfm @ 1.3 in wc filters). RREX (Shielded Area Exhaust) Systems Separate Sections B&C systems utilize two parallel banks of HEPA filters. Each bank includes a "bag-in/bag-out" pre-filter section and a ”bag-in/bag-out" HEPA filter section in series. Each section consists of six filters in a two-high X three-wide arrangement (two parallel flow paths). System airflow is 10,000 cfm which is within the capacity of three of the four filter flow paths on-line (Nine 1500 cfm @ 1.3 in wc filters). Both RREX Systems Prior to receipt the filters are tested at the Independent Filter Testing Facility (FTF) to confirm an efficiency of at least 99.97% for a decontamination factor DF = 3333. Decontamination factor has not been considered in the facility DSA. <u>Gap Analysis</u> No Gaps	

Evaluation Criteria	Discussion	Reference
2 - Ventilation System – Instrumentation & Control		
2.1 Provide system status instrumentation and/or alarms.	Address key information to ensure system operability (e.g., system delta-P, filter pressure drop).	ASME AG-1 DOE-HDBK-1169 ASHRAE Design Guide (Section 4)
	RREX (Equipment Room Exhaust and Shielded Area Exhaust) Systems The Sections B&C RREX systems (one fan per section) are instrumented on the cabinet status boards (#2 for B, #5 for C) in the C041 CR to show fan status and permit fan starting and stopping. HEPA Filters are provided with DP gauges. <u>Gap Analysis</u> No Gaps	
2.2 Interlock supply and exhaust fans to prevent positive pressure differential.	[DOE Guidance Document does not provide any specific evaluation guidance discussion for this criteria]	DOE-HDBK-1169 ASHRAE Design Guide (Section 4)
	RREX (Equipment Room Exhaust and Shielded Area Exhaust) Systems The Sections B&C Equipment Room RREX fans (one per section) are not interlocked with their equipment room HVAC supply fan counterparts to prevent positive DPs. The Sections B&C Shielded Areas have no direct supply fans to cause overpressurization. <u>Gap Analysis</u> Gap Number 16: Discretionary Gap - Interlocks are not provided between supply and exhaust systems.	
2.3 Post accident indication of filter break-through.	Instrumentation supports post accident planning and response; should be considered critical instrumentation for SC.	TECH-34
	RREX (Equipment Room & Shielded Area Exhaust) Systems The Sections B&C RREX (Equipment Room & Shielded Area) exhaust systems discharge to the section B&C stacks. Separate Sections B&C Stack Monitoring systems are in place to detect radioactivity above preset conditions. <u>Gap Analysis</u> No Gap - The Sections B&C RREX (Equipment Room & Shielded Area) exhaust fans, located in B/C001, appropriately exhaust to monitored stacks.	

Evaluation Criteria	Discussion	Reference
2.4 Reliability of control system to maintain confinement function under normal, abnormal and accident conditions.	Address, for example, impacts of potential common mode failures from events that would require active confinement function.	DOE-HDBK-1169 (2.4)
	RREX (Equipment Room & Shielded Area Exhaust) Systems each contain one fan. They are controlled from the Control Room and operate continuously. Activation of the Diversion system does not affect the RREX systems. In the event of a power failure, standby power is not provided to any of the RREX fans. The RREX fans (Equipment Room & Shielded Area) in each section will restart automatically. Under the four accident scenarios, the RREX systems would function normally. The C RREX (Equipment Room) exhaust fans are not interlocked with their B/C001 equipment room supply (HVAC) fans. <u>Gap Analysis</u> No Gaps	
2.5 Control components should fail safe.	[DOE Guidance Document does not provide any specific evaluation guidance discussion for this criteria]	DOE-HDBK-1169 (2.4)
	RREX (Equipment Room & Shielded Area Exhaust) System fans each have discharge dampers that fail closed on loss of power. <u>Gap Analysis</u> No Gap - RREX (Equipment Room & Shielded Area) exhaust system control components fail in a safe condition.	

Evaluation Criteria	Discussion	Reference
3 - Resistance to Internal Events – Fire		
3.1 Confinement ventilation systems should withstand credible fire events and be available to operate and maintain confinement.	Required for new facilities; as required by the accident analysis for existing facilities (discretionary). Must address protection of filter media.	DOE-HDBK-1169 (10.1) DOE-STD-1066
	As discussed in Table 4-3 transmittal letter SRNL-ROE-2007-00063, Attachment 4, Table 1, this evaluation criteria is NOT APPLICABLE. Per Ventilation System Evaluation Guidance for Safety-Related and Non-Safety Related Systems, Revision 0, January 2006, Page 21 and 22 Discussion, the evaluation of internal fire events for an existing facility is only required if the accident analysis takes credit for the active confinement ventilation system.	
3.2 Confinement ventilation systems should not propagate spread of fire.	Required for new facilities; as required by the accident analysis for existing facilities (discretionary). Address fire barriers, fire dampers arrangement.	DOE-HDBK-1169 (10.1) DOE-STD-1066
	As discussed in Table 4-3 transmittal letter SRNL-ROE-2007-00063, Attachment 4, Table 1, this evaluation criteria is NOT APPLICABLE. Per Ventilation System Evaluation Guidance for Safety-Related and Non-Safety Related Systems, Revision 0, January 2006, Page 21 and 22 Discussion, the evaluation of internal fire events for an existing facility is only required if the accident analysis takes credit for the active confinement ventilation system.	

Evaluation Criteria	Discussion	Reference
4 - Resistance to External Events – Natural Phenomena – Seismic		
4.1 Confinement ventilation systems should safely withstand earthquakes.	If the active CVS system is not credited in a seismic accident condition there is no need to evaluate that performance and/or design attribute for the confinement ventilation system (discretionary). Also, any seismic impact on the confinement ventilation system performance will be based on the current functional requirements in the DSA. NOTE: Seismic requirements may apply to Defense-in-Depth items indirectly for the protection of safety SSCs.	ASME AG-1 (AA) DOE O 420.1B DOE-HDBK-1169 (9.2)
	As discussed in Table 4-3 transmittal letter SRNL-ROE-2007-00063, Attachment 4, Table 1, this evaluation criteria is NOT APPLICABLE. Per 2004-2 Ventilation System Evaluation Guidance Addendum, March 6, 2007, Caution 4 and Ventilation System Evaluation Guidance for Safety-Related and Non-Safety Related Systems, Revision 0, January 2006, Page 22 Discussion, the evaluation of seismic events is only required if the accident analysis takes credit for the active confinement ventilation system during or after the NPH event.	

Evaluation Criteria	Discussion	Reference
5 - Resistance to External Events – Natural Phenomena – Tornado/Wind		
5.1 Confinement ventilation systems should safely withstand tornado depressurization.	If the active CVS is not credited in a tornado condition there is no need to evaluate that performance and/or design attribute for the confinement ventilation system (discretionary). Also, any tornado impact on the confinement ventilation system performance will be based on the current functional requirements in the DSA.	DOE O 420.1B DOE-HDBK-1169 (9.2)
	As discussed in Table 4-3 transmittal letter SRNL-ROE-2007-00063, Attachment 4, Table 1, this evaluation criteria is NOT APPLICABLE. Per 2004-2 Ventilation System Evaluation Guidance Addendum, March 6, 2007, Caution 4 and Ventilation System Evaluation Guidance for Safety-Related and Non-Safety Related Systems, Revision 0, January 2006, Pages 22 and 23 Discussion, the evaluation of tornado and wind events is only required if the accident analysis takes credit for the active confinement ventilation system during or after the NPH event.	
5.2 Confinement ventilation systems should withstand design wind effects on system performance.	If the active CVS is not credited in a wind condition there is no need to evaluate that performance and/or design attribute for the confinement ventilation system (discretionary). Also, any wind impact on the confinement ventilation system performance will be based on the current NP analysis in the DSA.	DOE O 420.1B DOE-HDBK-1169 (9.2)
	As discussed in Table 4-3 transmittal letter SRNL-ROE-2007-00063, Attachment 4, Table 1, this evaluation criteria is NOT APPLICABLE. Per 2004-2 Ventilation System Evaluation Guidance Addendum, March 6, 2007, Caution 4 and Ventilation System Evaluation Guidance for Safety-Related and Non-Safety Related Systems, Revision 0, January 2006, Pages 22 and 23 Discussion, the evaluation of tornado and wind events is only required if the accident analysis takes credit for the active confinement ventilation system during or after the NPH event.	

Evaluation Criteria	Discussion	Reference
6 - Other NP Events (eg. flooding, precipitation)		
6.1 Confinement ventilation system should withstand other NP events considered credible in the DSA where the confinement ventilation system is credited.	If the active confinement ventilation system is not credited for this event there is no need to evaluate that performance and/or design attribute for the confinement ventilation system (discretionary). Also, any impact on the confinement ventilation system performance will be based on the current NP analysis in the DSA.	DOE O 420.1B DOE-HDBK-1169 (9.2)
	As discussed in Table 4-3 transmittal letter SRNL-ROE-2007-00063, Attachment 4, Table 1, this evaluation criteria is NOT APPLICABLE. Per 2004-2 Ventilation System Evaluation Guidance Addendum, March 6, 2007, Caution 4 and Ventilation System Evaluation Guidance for Safety-Related and Non-Safety Related Systems, Revision 0, January 2006, Page 23 Discussion, the evaluation of other NPH events is only required if the accident analysis takes credit for the active confinement ventilation system during or after the NPH event.	

Evaluation Criteria	Discussion	Reference
7 - Range Fires / Dust Storms		
7.1 Administrative controls should be established to protect confinement ventilation systems from barrier threatening events.	Ensure appropriately thought out response to external threat is defined (e.g. pre-fire plan).	DOE O 420.1B
	The Savannah River Forestry Department is responsible for fire fighting efforts in regards to wildland fires. They also have a program of controlled burns and mechanical thinning of underbrush to limit or prevent wildland fire spreading out of control. If the fire encroaches upon SRNL, the Savannah River Site Fire Department will direct extinguishing efforts. Building 773-A has a current Fire Pre Plan and has procedures to reduce confinement ventilation system air flow (originally developed for electrical system Maintenance) that will minimize soot loading of the filters in the ventilation systems. Reference: AOP-06-007 <u>Gap Analysis</u> No Gap - Administrative controls are sufficient to protect the confinement ventilation systems for barrier threatening events.	

Evaluation Criteria	Discussion	Reference
8 - Testability		
8.1 Design supports the periodic inspection and testing of filters and housing, and test and inspections are conducted periodically.	Ability to test for leakage per intent of N510.	DOE-HDBK-1169 (2.3.8) ASME AG-1 ASME N510
	RREX (Equipment Room & Shielded Area Exhaust) Systems have no surveillance requirements. The filter housings are designed to allow in-place efficiency testing. The HEPA Filter Testing Program requires HEPA filters in active radiological service to be changed periodically and tested periodically. They will also be assessed for material buildup following a process event (triggered by SIRIM criteria). The RREX HEPA filters are all tested on an annual frequency to verify that they have an efficiency of greater or equal to 99.5%. <u>Gap Analysis</u> No Gap - Design supports periodic filter testing and inspection, and inspections are conducted periodically.	
8.2 Instrumentation required to support system operability is calibrated.	Credited instrumentation should have specified calibration / surveillance requirements. Non-safety instrumentation should be calibrated as necessary to support system functionality.	DOE-HDBK-1169 (2.3.8)
	RREX (Equipment Room & Shielded Area Exhaust) Systems have no calibration requirements in the TSR. Non-safety instrumentation is calibrated on an as-needed basis. <u>Gap Analysis</u> No Gap - The RREX Systems have no calibration requirements in the TSR.	
8.3 Integrated system performance testing is specified and performed.	Required responses assumed in the accident analysis must be periodically confirmed including any time constraints.	DOE-HDBK-1169 (2.3.8)
	RREX (Equipment Room & Shielded Area Exhaust) Systems have no requirements in the TSR for integrated system performance testing. <u>Gap Analysis</u> No Gap - The RREX Systems have no testing requirements in the TSR.	

Evaluation Criteria	Discussion	Reference
9 - Maintenance		
9.1 Filter service life program should be established.	Filter life (shelf life, service life, total life) expectancy should be determined. Consider: filter environment, maximum delta-P, radiological loading, age, and potential chemical exposure.	DOE-HDBK-1169 (3.1 & App C)
	RREX (Equipment Room & Shielded Area Exhaust) System HEPA filters are controlled by the Non-TSR HEPA Filter Program (TO-06-005) and Engineering Standard 15888 (HEPA Filter Requirements) which is the basis of DOE-HDBK-1169 Appendix C. This program sets a 3 year maximum shelf life and a 10 year maximum total life. <u>Gap Analysis</u> No Gap - The RREX HEPA filter service life program is established.	

Evaluation Criteria	Discussion	Reference
10 - Single Failure		
10.1 Failure of one component (equipment or control) shall not affect continuous operation.	Address potential failures (example failures - fan, backup power supply, switchgear).	DOE O 420.1B (Facility Safety, Chapter I, Sec. 3.b(8))
	Failure of any RREX (Equipment Room & Shielded Area Exhaust) system fan will interrupt continuous operation because none of the fans have a standby spare. <u>Gap Analysis</u> Gap Number 17: Discretionary Gap - Four exhaust sub-systems are not provided with a standby fan.	
10.2 Automatic backup electrical power shall be provided to all critical instruments and equipment required to operate and monitor the confinement ventilation system.	[DOE Guidance Document does not provide any specific evaluation guidance discussion for this criteria]	DOE-HDBK-1169 (2.2.7)
	RREX (Equipment Room & Shielded Area Exhaust) Systems will not operate in the event of a power failure. There is one Equipment Room (RREX) fan and one Shielded Area (RREX) fan in each section with no standby. <u>Gap Analysis</u> Gap Number 18: Discretionary Gap - Fans not provided with automatic backup electrical power.	
10.3 Backup electrical power shall be provided to all critical instruments and equipment required to operate and monitor the confinement ventilation system.	NOTE: Safety Class is addressed through previous line.	DOE-HDBK-1169 (2.2.7)
	This evaluation criteria is NOT APPLICABLE, as it is an SS-only criteria. SRNL confinement ventilation systems are evaluated to SC criteria.	

Evaluation Criteria	Discussion	Reference
11 - Other Credited Functional Requirements		
11.1 Address any specific functional requirements for the confinement ventilation system (beyond the scope of those above) credited in the DSA.	[DOE Guidance Document does not provide any specific evaluation guidance discussion for this criteria]	10 CFR 830, Subpart B
	None <u>Gap Analysis</u> No Gap	

Evaluation Criteria	Discussion	Reference
0 - Ventilation System Description & References		
0.1 System Description	N/A	N/A
	System Description The Cell Block Exhaust (CE) systems are two independent systems serving Section E Shielded Cell Blocks A&B. Cell Block A includes six shielded cells. Cell Block B includes ten shielded cells and two gloveboxes. The Cell Block Exhaust systems are the primary exhaust system for Section E. All Cell exhaust is triple HEPA filtered before discharge to the Sand Filter. Each CE system consists of two exhaust fans (one normally operating and one in standby). Reference Attachment 11 Figure A for a system single line. One fan in each system (Fans A1 and B2) is configured to receive an alternate power feed if needed. In the event of a loss of power, standby power is provided to all four fans by the 773-A Diesel Generator. While the Shielded Cells have been qualified to PC-3 for NPH events, the surrounding building structures that support the ventilation equipment (including the Cell Exhaust system) are only qualified to PC-1.	

Evaluation Criteria	Discussion	Reference
0.2 System References	N/A	N/A
	System Design Descriptions o G-SYD-A-00004, Cell Block Exhaust System Design Description o M-SYD-A-00022, HVAC Supply and Miscellaneous Exhaust System Design Description o G-SYD-A-00006, SRTC Area Shielded Cells System Design Description o G-SYD-A-00002, SRNL Sand Filter System Design Description o M-SYD-A-00024, IA, PLTA & Compressor Alternate CW o E-SYD-A-00008, 773-A D/G Standby Power System Drawings o ST5-14557, Exhaust System for HLC, Cells 7-16 o ST5-19471, A Cell Block Exhaust Equip. Arrgt. , Cells 1-6 o M-M6-A-0204, A Cell Exhaust Cells 1 thru 6 P&ID o M-M6-A-0205, B Cell Exhaust Cells 7 thru 12 P&ID o M-M6-A-0206, B Cell Exhaust Fans P&ID o M-M6-A-0207, B Cell Exhaust Cells 13 thru 16 P&ID Test Procedures o TO-06-019, Functional Test of Section E Cell Block Exhaust Interlocks and Alarms o TO-06-025, Functional Test of Shielded Cell Blocks A & B Exhaust System Fans o 5Q1.2, Procedure 484, Building Air Survey o TO-05-027, 773-A D/G Annual Design Load Test Round Sheets and Other Procedures o ROD-OPS-2002-002 - Control Area Operator (CAO) Round Sheets o ROD-OPS-2002-003 - Facility Operator (FO) Round Sheets o AOP-06-007, Wildland Fire, Facility Ventilation Shutdown and/or Evacuation o AOP-06-002, Loss of Ventilation, A Cell Block o AOP-06-003, Loss of Ventilation, B Cell Block o TE-48-042, Calibration of Cell Exhaust Flow Indicators Standards o DuPont Engineering Specifications 3027, 3017, 5998, 7591, 8728, H16J, SH1A. o SRS Procurement Specification M-SPP-G-00243, HEPA Filter Specification o SRS Engineering Standard 15888, HEPA Filter Requirements o DOE-STD-3020-2005, DOE Technical Standard - Specification for HEPA Filters Used by DOE Contractors o DOE-STD-3025-2007, DOE Technical Standard - Quality Assurance Inspection and Testing of HEPA Filters o UL 586, UL Standard for Safety, High Efficiency, Particulate, Air Filter Units, 1996 o ANSI/ASME NQA-1, Quality Assurance Program Requirements for Nuclear Facilities Miscellaneous o Ventilation System Evaluation Guidance for Safety-Related and Non-Safety Related Systems, January 2006 o 2004-2 Ventilation System Evaluation Guidance Addendum, March 2007 o SRNL-ROE-2007-00063, SRNL Table 4-3 Submittal to DOE-SR, April 2007 o WSRC-SA-2, SRNL Technical Area (TA) Documented Safety Analysis (DSA), Revision 3	

Evaluation Criteria	Discussion	Reference
	o WSRC-TS-97-00014, SRNL Technical Area (TA) Technical Safety Requirements (TSRs), Revision 4 o SRNL-ESD-2007-00017, Structural Integrity Program Scope, Resources & Estimate, February 2007	

Evaluation Criteria	Discussion	Reference
1 - Ventilation System – General Criteria		
1.1 Pressure differential should be maintained between zones and atmosphere.	Number of zones as credited by accident analysis to control hazardous material release; demonstrate by use considering potential in-leakage.	DOE-HDBK-1169 (2.2.9) ASHRAE Design Guide
	The Section E zone flows and ventilation system interactions are described in the specific SDD documents (see references). To evaluate ventilation system performance, air balance tests are periodically conducted for E-Section ventilation systems and compared to design basis flows. Optimal air movement between confinement zones is verified (tertiary-to-secondary-to-primary). Results are documented in an Air Balance Test Report. Key system parameters are recorded on a daily and weekly basis (operator rounds) which allows monitoring of ventilation system function and performance. The Section E, A Cellblock and B Cellblock exhaust systems are currently operated at minimum flows of 2100 CFM and 3400 CFM respectively, approximately 60% of cell volume per minute. The robust cell exhaust flows provide adequate differential pressure between the cells and the adjacent spaces such that a positive airflow is maintained into the primary confinement zones from the secondary confinement zones. Confinement Zones o Primary Confinement Shielded Cells / Gloveboxes / Ducting through 1st testable HEPA filter stage o Secondary Confinement Cell Operating & Service Areas / Cell roof / HEPA filter room o Tertiary Confinement Corridors / Offices / General Service Floor Area Confinement zones as a ventilation system design basis are not credited in the facility DSA. Minimum CE system flows to provide confinement of the cell contents are maintained as directed by the facility TSR's. <u>Gap Analysis</u> No Gap - The cells are maintained as primary confinement zones.	
1.2 Materials of construction should be appropriate for normal, abnormal and accident conditions.	[DOE Guidance Document does not provide any specific evaluation guidance discussion for this criteria]	DOE-HDBK-1169 (2.2.5) ASME AG-1
	Section E CE Systems exhaust air from shielded cells which may contain highly radioactive material. CE ducting extends from the shielded cells to the Cell Exhaust fans located on the roof of Section E. All cell exhaust is triple-HEPA filtered and discharged to the FHSF inlet ducting. For Cell Block B, ducting from the cells to the 3rd stage filter housing is 16 ga. 304L SS. HEPA filter housings are 304L SS. Ducting from the last HEPA filter housing to the fans is 16 ga. galvanized steel. For Cell Block A ducting is 16 ga. 304L SS. Flange gaskets are 1/8" neoprene. Flexible connections at the fan suction are per DuPont Std. H16J. Blast gate damper is 304L SS. Fans are coated carbon steel. The CE fans discharge to the Sand Filter inlet ducting (stainless steel). <u>Gap Analysis</u> No Gap - All materials of construction are appropriate for normal, abnormal and accident conditions. Inspections conducted as part of the Structural Integrity Program on the inside of the Section E HEPA ductwork to date have shown no reasons why the ventilation system cannot perform it's intended function during all conditions.	

Evaluation Criteria	Discussion	Reference
1.3 Exhaust system should withstand anticipated normal, abnormal and accident system conditions and maintain confinement integrity.	As required by accident analysis to prevent accident release. The CE systems are designed to maintain the primary confinement zones at a negative pressure with respect to surrounding areas such that a positive airflow is maintained into the primary confinement zones from the secondary confinement zones. During normal operation these multiple systems run continuously within defined performance parameters to maintain the proper confinement air flow. All exhaust air flows are filtered through HEPA filters. The CE systems exhaust to the Sand Filter (FHSF) system. The ventilation system components are adequate for normal and abnormal conditions. Abnormal conditions include power failure, partial shutdown, removal of a Cell Cover or Roof Plug, changing of in-cell HEPA filters, manipulator replacement, or activation of the Cell Block A or Cell Block B Halon fire suppression system. In the event of a power failure, all CE fans are provided with Standby power from the 773-A Diesel Generator. In case the primary switchgear requires maintenance, an alternate power feed is available for fans A1 and B2. Operating procedures are in place to maintain confinement ventilation in the event of the removal of a Cell Cover or Roof Plug, changing of in-cell HEPA filters, or manipulator replacement. Regarding activation of the cell block Halon fire suppression systems, the Halon discharge rates have been evaluated and are less than minimum cell flow rate. The following accident scenarios are considered. Process Explosion - Unstable Lab Chemical or Accumulation of Process Flammable Gas or VOCs with no consequential fire - Ventilation systems would operate normally to maintain a positive pressure differential into the effected cells. Exhaust flows through HEPA filtration are believed adequate to contain mobilized contaminants. If the HEPA plugs, the contaminants would be contained within the cells and ductwork. If the HEPA is compromised the exhaust air would pass through to the Sand Filter. If a filter housing or ducting is compromised, the RREX (Exhaust) systems would contain the contamination. Lab/Cell walls, Gloveboxes, and ductwork would passively contain contaminants. Explosion - Glovebox Overpressurization - same as above. Explosion - Accumulation of Distributed Flammable Gas with no consequential fire - Not applicable. Distributed flammable gas is not supplied to the shielded cells. Drop / Spill - The CE system flow is sufficient to mitigate chemical spills inside the cells. Exhaust flows through HEPA filtration are adequate to contain mobilized contaminants. <u>Gap Analysis</u> No Gaps	DOE-HDBK-1169 (2.4) ASHRAE Design Guide

Evaluation Criteria	Discussion	Reference
1.4 Confinement ventilation systems shall have appropriate filtration to minimize release.	Address: 1) Type of filter (e.g., HEPA, sand, sintered metal); 2) Filter sizing (flow capacity and pressure drop); 3) Decontamination Factor vs. accident analysis assumptions. Nuclear Grade HEPA filters are procured to SRS Specification M-SPP-G-00243 which incorporates the requirements of ASME AG-1. The cell exhaust is filtered by two stages of individually tested HEPA filters in series periodically leak tested in place to confirm a filter housing filtration efficiency of 99.95%. This efficiency was qualitatively selected to ensure that the HEPA filter is properly installed to support the passive confinement function. Prior to receipt the filters are tested at the Independent Filter Testing Facility (FTF) to confirm an efficiency of at least 99.97% for a decontamination factor DF = 3333. Decontamination factor has not been considered in the facility DSA. The filters are credited with confinement function only, not dose reduction. The exhaust from Cell Block A discharges from Cells 2, 4 & 6. Each of these cells have an in-cell dust cover and 1st stage HEPA filter. This first stage HEPA filter functions as a prefilter. The three exhaust streams discharge to three single stage HEPA filters. Each flow path normally operates at 1000 cfm. A common plenum caries the 2nd stage filter exhaust to three parallel single stage HEPA filters on the main floor. The 3rd stage exhaust discharges to the FHSF. The exhaust from Cell Block B discharges from Cells 8,10,12,14,15, & 16. Each of these cells have an in-cell dust cover and 1st stage HEPA filter. This first stage HEPA filter functions as a prefilter. The six exhaust streams discharge to six single (second) stage HEPA filters. Each flow path normally operates at 750 cfm. A common plenum caries the 2nd stage exhaust and the exhaust from two manipulator decon gloveboxes to two parallel, single stage filter banks in a main floor filter room. The 3rd stage filters exhaust discharges to the FHSF. HEPA Filters used are listed below. 1st stage In-Cell HEPA Filter Cell Block A - 24” X 24” X 11.5” fluid seal -rated flow @ 1” wc DP- 1500 CFM Cell Block B Cells 8, 10, & 12 - 24” X 24” X 5-7/8” Type II - rated flow @ 1” wc DP- 500 CFM Cell Block B Cells 14, 15, & 16 - 24” X 24” X 5-7/8” Type I - rated flow @ 1” wc DP- 500 CFM 2nd stage HEPA Filter Cell Block A - 24” X 24” X 11.5” metal frame, fluid seal - rated flow @ 1” wc DP- 1000 CFM Cell Block B - 24” X 24” X 5-7/8” Flanders Type G-1 housing- rated flow @ 1.3” wc DP- 1500 CFM 3rd stage HEPA Filter Cell Block A - 24” X 24” X 11.5” metal frame, fluid seal - rated flow @ 1” wc DP- 1000 CFM Cell Block B - 24” X 24” X 11.5” wood frame, fluid seal - rated flow @ 1” wc DP- 1000 CFM Cell Block B 1st stage HEPA filters have a combined rated airflow capacity of 3000 cfm. This is less than the normal operating airflow the filter rating (3400 and 4500 cfm). The filters function as a nuclear grade prefilter (i.e. not credited in the DSA), is not in-place tested and is followed by two stages of in-place tested HEPA filters and a sand filter. For this reason, this filter sizing anomaly has not been identified as a gap.	ASME AG-1 DOE-HDBK-1169 (2.2.1)

Evaluation Criteria	Discussion	Reference
	Gap Analysis Gap Number 23: Discretionary Gap - Cell Block B 3rd stage HEPA filter airflow is greater than the filter rating during individual HEPA filter isolation. Gap Number 24: Discretionary Gap - Cell Block A 2nd stage HEPA filters and Cell Block A 3rd stage HEPA filter airflow is greater than the filter rating during individual HEPA filter isolation.	

Evaluation Criteria	Discussion	Reference
2 - Ventilation System – Instrumentation & Control		
2.1 Provide system status instrumentation and/or alarms.	Address key information to ensure system operability (e.g., system delta-P, filter pressure drop).	ASME AG-1 DOE-HDBK-1169 ASHRAE Design Guide (Section 4)
	The Section E CE fans (two fans per section) are instrumented on the cabinet status boards in the C041 CR to show fan status and permit fan starting and stopping. Each cell exhaust branch (3 in A Cell Block, 6 in B Cell Block) have low flow alarms that display in the C041 CR. Cell Block A exhaust has pitot tube array flow instrumentation installed in each of the three exhaust branches. Cell block B exhaust has a pitot tube array instrumentation in the main exhaust duct indicating total cell block flow. These instruments and their associated indicators are credited in the DSA for verifying TSR operational parameters of the systems. Each cell block is equipped with a differential pressure indicator for cell to operating area DP. The system HEPA filter housings are provided with the following instrumentation: Cell Block A 2nd stage - flow indicator Cell Block B 2nd stage - DP indicators; flow indicator Cell Block A 3rd stage - none Cell Block B 3rd stage -none <u>Gap Analysis</u> Gap Number 25: Discretionary Gap - Cell Block A 2nd Stage HEPA Filters, Cell Block A 3rd stage HEPA filters and Cell Block B 3rd Stage HEPA filters are not provided with differential pressure indicators.	
2.2 Interlock supply and exhaust fans to prevent positive pressure differential.	[DOE Guidance Document does not provide any specific evaluation guidance discussion for this criteria]	DOE-HDBK-1169 ASHRAE Design Guide (Section 4)
	Section E supply and exhaust fans are not interlocked. If the CE system were to shut down, Section E would become pressurized with respect to adjacent building areas and the outside environment. Since no supply air is provided directly into the cells, a primary confinement zone airflow reversal would not occur. Alarm response procedures (ARP) and Abnormal Operating Procedures (AOP) include steps to shutdown the appropriate HVAC/Supply units to correct the pressure differential between the secondary and tertiary confinement zones. <u>Gap Analysis</u> Gap Number 26: Discretionary Gap - Interlocks are not provided between the supply and exhaust systems.	

Evaluation Criteria	Discussion	Reference
2.3 Post accident indication of filter break-through.	Instrumentation supports post accident planning and response; should be considered critical instrumentation for SC.	TECH-34
	The Section E CE system has duct sampling stations between the 1st Stage (in-cell) and 2nd Stage (1st testable stage) HEPA Filter housing that are sampled on a weekly basis. This provides routine and post event indication of filter break-through. The system then discharges to the SRNL Sand Filter which is equipped with both an inlet and outlet monitoring system which reports to the SRNL control room. See attachment 9 Evaluation Criteria 2.3 for addtional detail. <u>Gap Analysis</u> No Gap	
2.4 Reliability of control system to maintain confinement function under normal, abnormal and accident conditions.	Address, for example, impacts of potential common mode failures from events that would require active confinement function.	DOE-HDBK-1169 (2.4)
	Section E CE systems each contain two parallel exhaust fans controlled from the C041 Control Room. Normally one fan operates continuously (lead) and one fan is in standby. If either exhaust plenum static pressure drops to 2 in wc the primary fan is de-energized and the standby fan is energized. If the A Cell Block exhaust fan inlet plenum drops below 2” wc vacuum, an alarm will sound in the control room. If the B Cell Block exhaust fan inlet plenum drops below 1” wc vacuum, an alarm will sound in the control room and in the cell block operating area. Abnormal operations include lead fan failure, loss of power and control system failure. In the event of power failure, standby power is provided to all four CE fans. In the event of lead fan failure, the standby fan will start. In the event of control system failure, one fan in each cell block can be manually switched to an alternate power feed which operates from a local stop/start station. The Sections E CE exhaust systems each have redundant fans that are powered with standby power. Operation of the systems is controlled by operating procedures. System control is maintained during abnormal and accident conditions by Abnormal Operating Procedures (AOPs) and Alarm Response Procedures (ARPs). <u>Gap Analysis</u> No Gap.	

Evaluation Criteria	Discussion	Reference
2.5 Control components should fail safe.	[DOE Guidance Document does not provide any specific evaluation guidance discussion for this criteria]	DOE-HDBK-1169 (2.4)
	The Section E CE fan controls are fail safe- if a fan fails, the standby fan will come on line. The A Cell Block fan discharge dampers are pneumatically operated and close when the associated fan fails. The B Cell Block fan discharge dampers are gravity operated and close upon fan failure. In case of loss of the Instrument Air system, the air operated A Cell Block fan inlet dampers will fail closed. The A Cell Block Exhaust Failure Alarm will sound in the main control room. Shielded Cells Operations will be advised to stop all in-cell activites. Both Cell Block Exhaust Failure Alarms will sound in the main control room. Loss of instrument air will cause the cell outlet dampers for both cell blocks to fail closed. This is the desired failure mode to ensure that a positive pressure event in the Sand Filter inlet duct does not backflow contamination from the cells to the operating and maintenance areas. Loss of airflow caused by the dampers failing closed will alarm in the main control room. <u>Gap Analysis</u> No Gap - Control components for the Section E CE systems are fail-safe.	

Evaluation Criteria	Discussion	Reference
3 - Resistance to Internal Events – Fire		
3.1 Confinement ventilation systems should withstand credible fire events and be available to operate and maintain confinement.	Required for new facilities; as required by the accident analysis for existing facilities (discretionary). Must address protection of filter media.	DOE-HDBK-1169 (10.1) DOE-STD-1066
	As discussed in Table 4-3 transmittal letter SRNL-ROE-2007-00063, Attachment 4, Table 1, this evaluation criteria is NOT APPLICABLE. Per Ventilation System Evaluation Guidance for Safety-Related and Non-Safety Related Systems, Revision 0, January 2006, Page 21 and 22 Discussion, the evaluation of internal fire events for an existing facility is only required if the accident analysis takes credit for the active confinement ventilation system.	
3.2 Confinement ventilation systems should not propagate spread of fire.	Required for new facilities; as required by the accident analysis for existing facilities (discretionary). Address fire barriers, fire dampers arrangement.	DOE-HDBK-1169 (10.1) DOE-STD-1066
	As discussed in Table 4-3 transmittal letter SRNL-ROE-2007-00063, Attachment 4, Table 1, this evaluation criteria is NOT APPLICABLE. Per Ventilation System Evaluation Guidance for Safety-Related and Non-Safety Related Systems, Revision 0, January 2006, Page 21 and 22 Discussion, the evaluation of internal fire events for an existing facility is only required if the accident analysis takes credit for the active confinement ventilation system.	

Evaluation Criteria	Discussion	Reference
4 - Resistance to External Events – Natural Phenomena – Seismic		
4.1 Confinement ventilation systems should safely withstand earthquakes.	If the active CVS system is not credited in a seismic accident condition there is no need to evaluate that performance and/or design attribute for the confinement ventilation system (discretionary). Also, any seismic impact on the confinement ventilation system performance will be based on the current functional requirements in the DSA. NOTE: Seismic requirements may apply to Defense-in-Depth items indirectly for the protection of safety SSCs.	ASME AG-1 (AA) DOE O 420.1B DOE-HDBK-1169 (9.2)
	As discussed in Table 4-3 transmittal letter SRNL-ROE-2007-00063, Attachment 4, Table 1, this evaluation criteria is NOT APPLICABLE. Per 2004-2 Ventilation System Evaluation Guidance Addendum, March 6, 2007, Caution 4 and Ventilation System Evaluation Guidance for Safety-Related and Non-Safety Related Systems, Revision 0, January 2006, Page 22 Discussion, the evaluation of seismic events is only required if the accident analysis takes credit for the active confinement ventilation system during or after the NPH event.	

Evaluation Criteria	Discussion	Reference
5 - Resistance to External Events – Natural Phenomena – Tornado/Wind		
5.1 Confinement ventilation systems should safely withstand tornado depressurization.	If the active CVS is not credited in a tornado condition there is no need to evaluate that performance and/or design attribute for the confinement ventilation system (discretionary). Also, any tornado impact on the confinement ventilation system performance will be based on the current functional requirements in the DSA.	DOE O 420.1B DOE-HDBK-1169 (9.2)
	As discussed in Table 4-3 transmittal letter SRNL-ROE-2007-00063, Attachment 4, Table 1, this evaluation criteria is NOT APPLICABLE. Per 2004-2 Ventilation System Evaluation Guidance Addendum, March 6, 2007, Caution 4 and Ventilation System Evaluation Guidance for Safety-Related and Non-Safety Related Systems, Revision 0, January 2006, Pages 22 and 23 Discussion, the evaluation of tornado and wind events is only required if the accident analysis takes credit for the active confinement ventilation system during or after the NPH event.	
5.2 Confinement ventilation systems should withstand design wind effects on system performance.	If the active CVS is not credited in a wind condition there is no need to evaluate that performance and/or design attribute for the confinement ventilation system (discretionary). Also, any wind impact on the confinement ventilation system performance will be based on the current NP analysis in the DSA.	DOE O 420.1B DOE-HDBK-1169 (9.2)
	As discussed in Table 4-3 transmittal letter SRNL-ROE-2007-00063, Attachment 4, Table 1, this evaluation criteria is NOT APPLICABLE. Per 2004-2 Ventilation System Evaluation Guidance Addendum, March 6, 2007, Caution 4 and Ventilation System Evaluation Guidance for Safety-Related and Non-Safety Related Systems, Revision 0, January 2006, Pages 22 and 23 Discussion, the evaluation of tornado and wind events is only required if the accident analysis takes credit for the active confinement ventilation system during or after the NPH event.	

Evaluation Criteria	Discussion	Reference
6 - Other NP Events (eg. flooding, precipitation)		
6.1 Confinement ventilation system should withstand other NP events considered credible in the DSA where the confinement ventilation system is credited.	If the active confinement ventilation system is not credited for this event there is no need to evaluate that performance and/or design attribute for the confinement ventilation system (discretionary). Also, any impact on the confinement ventilation system performance will be based on the current NP analysis in the DSA.	DOE O 420.1B DOE-HDBK-1169 (9.2)
	As discussed in Table 4-3 transmittal letter SRNL-ROE-2007-00063, Attachment 4, Table 1, this evaluation criteria is NOT APPLICABLE. Per 2004-2 Ventilation System Evaluation Guidance Addendum, March 6, 2007, Caution 4 and Ventilation System Evaluation Guidance for Safety-Related and Non-Safety Related Systems, Revision 0, January 2006, Page 23 Discussion, the evaluation of other NPH events is only required if the accident analysis takes credit for the active confinement ventilation system during or after the NPH event.	

Evaluation Criteria	Discussion	Reference
7 - Range Fires / Dust Storms		
7.1 Administrative controls should be established to protect confinement ventilation systems from barrier threatening events.	Ensure appropriately thought out response to external threat is defined (e.g. pre-fire plan).	DOE O 420.1B
	The Savannah River Forestry Department is responsible for fire fighting efforts in regards to wildland fires. They also have a program of controlled burns and mechanical thinning of underbrush to limit or prevent wildland fires spreading out of control. If the fire encroaches upon SRNL, the Savannah River Site Fire Department will direct extinguishing efforts. Building 773-A has a current Fire Pre Plan and has procedures to reduce confinement ventilation system air flow (originally develop for electrical system maintenance) that will minimize soot loading of the filters in the ventilation systems. Reference: AOP-06-007 Dust storms are not an issue at the Savannah River Site due to the regional climate. <u>Gap Analysis</u> No Gap. Administrative controls are sufficient to protect the confinement ventilation systems for barrier threatening events.	

Evaluation Criteria	Discussion	Reference
8 - Testability		
8.1 Design supports the periodic inspection and testing of filters and housing, and test and inspections are conducted periodically.	Ability to test for leakage per intent of N510.	DOE-HDBK-1169 (2.3.8) ASME AG-1 ASME N510
	2nd and 3rd stage HEPA filter housings have the capability for in-place testing. The HEPA Filter Testing Program requires HEPA filters in active radiological service to be changed periodically. They will also be assessed for material buildup following a process event. (Triggered by SIRIM criteria.) 2nd and 3rd stage CE HEPA filter are tested every 18 months to verify that they have an efficiency of greater or equal to 99.95%. <u>Gap Analysis</u> No Gap - Design supports periodic filter testing and inspection and inspections are conducted periodically.	
8.2 Instrumentation required to support system operability is calibrated.	Credited instrumentation should have specified calibration / surveillance requirements. Non-safety instrumentation should be calibrated as necessary to support system functionality.	DOE-HDBK-1169 (2.3.8)
	Magnehelic flow indicators used to perform TSR Surveillance Requirements are calibrated on an 18 month frequency. Pressure switches associated with the low pressure alarm and interlock system are calibrated on a 24 month frequency. Non-safety instrumentation is calibrated on an as-needed basis. <u>Gap Analysis</u> No Gap	

Evaluation Criteria	Discussion	Reference
8.3 Integrated system performance testing is specified and performed.	Required responses assumed in the accident analysis must be periodically confirmed including any time constraints.	DOE-HDBK-1169 (2.3.8)
	Airflow direction is verified at key points within the building during periodic air balance testing to verify that the ventilation systems are functioning as intended. Findings are forwarded to the Design Authority Engineer. System airflow and differential pressures are monitored and recorded as part of normal operator rounds. No functional testing is required by the TSR of the CE systems, however the alarm and standby fan circuits are tested on a periodic basis (See Section 0.2 for references). <u>Gap Analysis</u> No Gap	

Evaluation Criteria	Discussion	Reference
9 - Maintenance		
9.1 Filter service life program should be established.	Filter life (shelf life, service life, total life) expectancy should be determined. Consider: filter environment, maximum delta-P, radiological loading, age, and potential chemical exposure.	DOE-HDBK-1169 (3.1 & App C)
	Per requirements of SRS Engineering Standard 15888, a Filter service life program has been established for this system. This standard is the basis of the Nuclear Air Cleaning Handbook Appendix C. The filters have a maximum shelf life of 3 years and total life of 10 years. Program is tracked using the Computerized Maintenance Management System . In-Cell (or 1st stage) HEPA filters typically are in service for approx three years until dust loading requires replacement of the filters. This has been found to bound any degradation due to radiation or temperature. <u>Gap Analysis</u> No Gap	

Evaluation Criteria	Discussion	Reference
10 - Single Failure		
10.1 Failure of one component (equipment or control) shall not affect continuous operation.	Address potential failures (example failures - fan, backup power supply, switchgear).	DOE O 420.1B (Facility Safety, Chapter I, Sec. 3.b(8))
	Each CE system is aligned with two operable fans; one in standby to provide redundancy. A fan failure is indicated as an alarm in the main control room. The standby fan starts automatically to restore full system operability. In the event of a power failure, standby power will be provided to all Section E CE fans, but they must be manually restarted from the Control Room. The two CE fans for each cell exhaust system are powered from the same motor control center. Both fans in each system will be inoperable if the respective MCC is deenergized. One fan in each system may be manually switched to an alternate MCC. However automatic switching or separate power sources for all CE fans would be needed for continuous operation after loss of an MCC. Fan operation is not credited in the facility DSA to prevent or mitigate a design basis accident, but continued system operability following an MCC loss is an element of an “active confinement system”. <u>Gap Analysis</u> Gap Number 27: Discretionary Gap - The two sub-systems are powered from the same MCC from the same D/G. Gap Number 58: Discretionary Gap - The two sub-systems are powered by a single control transforner for each sub-system.	
10.2 Automatic backup electrical power shall be provided to all critical instruments and equipment required to operate and monitor the confinement ventilation system.	[DOE Guidance Document does not provide any specific evaluation guidance discussion for this criteria]	DOE-HDBK-1169 (2.2.7)
	The 773-A standby diesel generator automatically supplies backup power to the CE fans and control equipment upon a loss of normal power. The control room CE fan failure alarms and fan status indicators are provided with automatic back-up power. The system backup power feature is not credited in the DSA with a preventive or mitigative function following a design basis accident. <u>Gap Analysis</u> No Gap	
10.3 Backup electrical power shall be provided to all critical instruments and equipment required to operate and monitor the confinement ventilation system.	NOTE: Safety Class is addressed through previous line.	DOE-HDBK-1169 (2.2.7)
	This evaluation criteria is NOT APPLICABLE, as it is an SS-only criteria. SRNL confinement ventilation systems are evaluated to SC criteria.	

Evaluation Criteria	Discussion	Reference
11 - Other Credited Functional Requirements		
11.1 Address any specific functional requirements for the confinement ventilation system (beyond the scope of those above) credited in the DSA.	[DOE Guidance Document does not provide any specific evaluation guidance discussion for this criteria]	10 CFR 830, Subpart B
	None <u>Gap Analysis</u> No Gap	

Evaluation Criteria	Discussion	Reference
0 - Ventilation System Description & References		
0.1 System Description	N/A	N/A
	System Description The Section E Regulated Room Exhaust (E-RREX) System consists of four independent sub-systems that exhaust various locations in Section E. All four E-RREX sub-systems discharge to the SRNL Sand Filter inlet duct on the Section E roof. Reference Attachment 11 Figure A for a system single line. E-RREX MDF Exhaust Sub-system Three (3) E-RREX Fans exhaust the Manipulator Decontamination Facility (Room E-063) and the Shielded Storage Room (Room E-061) using single-stage HEPA filtration, with a separate filter at each fan inlet. Each fan has a capacity of 1200 CFM at 6.6 inwc vacuum. The two room exhaust ducts are cross tied and configured such that the three fans are installed in parallel. Normal operation is two fans running with one in standby. All three fans are provided with both normal and backup power. If one of the normally running fans fails, alarms activate locally in the Section E cell operating area and remotely in the C041 Control Room. The standby fan is started manually from a local control panel in Section E Room E-065. E-RREX High Bay Exhaust Sub-system Two (2) E-RREX Fans exhaust the High Bay Loading Area (Room E-079) using single-stage HEPA filtration, with one filter at each of the two fan inlets. Normal operation is one fan running with the other in standby. Both fans are supplied with normal power only. If the normally running fan fails, alarms activate locally in the Section E cell operating area and remotely in the C041 Control Room. Note - the High Bay Loading Area is also exhausted by the E-LHEX system, which is covered in a separate Table 5-1. E-RREX Lab and Storage Exhaust Sub-system Two (2) E-RREX Fans exhaust Laboratory and Storage Rooms E-041, E-043, E-045, E-047, and F-080 using single-stage HEPA filtration, with each room having a local HEPA filter at its room exhaust duct inlet. Normal operation is one fan running with the other in standby. Both fans are supplied with normal power only. If the normally running fan fails, alarms activate locally in the Section E cell operating area and remotely in the C041 Control Room. The standby fan is started manually from a local control panel in Room E-001. E-RREX Fan Room Exhaust Sub-system One (1) E-RREX Fan exhausts the E-131 Fan Room using single-stage HEPA filtration, with one filter at the room exhaust duct inlet. There is no alarm to indicate fan room exhaust failure. The building shell, walls and roof associated with the RREX systems are qualified to PC-1.	

Evaluation Criteria	Discussion	Reference
0.2 System References	N/A	N/A
	System Design Descriptions o M-SYD-A-00022, 773-A Section E, HVAC Supply and Miscellaneous Exhaust o M-SYD-A-00024, IA, PLTA & Compressor Alternate CW o E-SYD-A-00008, 773-A D/G Standby Power System o G-SYD-A-00002, SRNL Sand Filter System Design Description Drawings o M-M5-A-0206, Section E Exhaust Systems Air Balance Riser Diagram o W144392, Basic Design Manual Section E H&V Flow Diagram o P-PH-A-0076, High Level Caves Supply and Exhaust Systems Air Flow and Balance o M-M6-A-0164, Manipulator Decontamination Facility Exhaust System P&ID Test Procedures o TP-02-773A-EWING-01, Section E Air Balance Test Procedure o 5Q1.2, Procedure 484, Building Air Survey o TO-05-027, 773-A D/G Annual Design Load Test Round Sheets and Other Procedures o ROD-OPS-2002-002 - Control Area Operator (CAO) Round Sheets o ROD-OPS-2002-003 - Facility Operator (FO) Round Sheets o AOP-06-007, Wildland Fire, Facility Ventilation Shutdown and/or Evacuation Standards o DuPont Engineering Specifications 3027, 3017, 5998, 7591, 8728, H16J, SH1A. o SRS Procurement Specification M-SPP-G-00243, HEPA Filter Specification o SRS Engineering Standard 15888, HEPA Filter Requirements o DOE-STD-3020-2005, DOE Technical Standard - Specification for HEPA Filters Used by DOE Contractors o DOE-STD-3025-2007, DOE Technical Standard - Quality Assurance Inspection and Testing of HEPA Filters o UL 586, UL Standard for Safety, High Efficiency, Particulate, Air Filter Units, 1996 o ANSI/ASME NQA-1, Quality Assurance Program Requirements for Nuclear Facilities Miscellaneous o Ventilation System Evaluation Guidance for Safety-Related and Non-Safety Related Systems, January 2006 o 2004-2 Ventilation System Evaluation Guidance Addendum, March 2007 o SRNL-ROE-2007-00063, SRNL Table 4-3 Submittal to DOE-SR, April 2007 o WSRC-SA-2, SRNL Technical Area (TA) Documented Safety Analysis (DSA), Revision 3 o WSRC-TS-97-00014, SRNL Technical Area (TA) Technical Safety Requirements (TSRs), Revision 4 o SRNL-ESD-2007-00017, Structural Integrity Program Scope, Resources & Estimate, February 2007	

Evaluation Criteria	Discussion	Reference
1 - Ventilation System – General Criteria		
1.1 Pressure differential should be maintained between zones and atmosphere.	Number of zones as credited by accident analysis to control hazardous material release; demonstrate by use considering potential in-leakage.	DOE-HDBK-1169 (2.2.9) ASHRAE Design Guide
	Confinement Zones o Primary Confinement Shielded Cells / Gloveboxes / Ducting through 1st testable HEPA filter stage o Secondary Confinement Cell Operating & Service Areas / Cell roof / HEPA filter room / Fan Room o Tertiary Confinement Corridors / Offices / General Service Floor Area See Table 5-1 for the Cell Exhaust System for a discussion of the Section E primary confinement zones. The E-RREX exhaust systems serve secondary confinement zones only. Secondary confinement zones consist of the cell large equipment loading area (high bay), cell small equipment loading areas, manipulator glovebox room, offices, change/restrooms and cell operating areas. These areas have a limited quantity of direct supply air; the major portion is drawn from the tertiary confinement zone. These areas have a number of direct exhaust systems for locations with a higher contamination potential. Tertiary confinement zones consist of office, storage, maintenance and support spaces surrounding the secondary confinement zone. The spaces have a mixture of recirculating HVAC systems, 100% outside air HVAC systems and unfiltered exhaust systems. Differential pressures between zones are not measured directly, but instead are maintained by periodic monitoring of air flow, and by periodic performance of air flow balance tests. Air flow direction checks are performed quarterly per Manual 5Q1.2 - 484. Air balance tests are performed periodically to ensure proper air flows and room differential pressures. The last such test for Section E was performed in 2001. The E-RREX MDF Exhaust Sub-system fans are equipped with variable frequency drives to regulate the speed of E-RREX Fans 1, 2 and 3 to maintain constant air flow as the pre-filter and HEPA filter pressure drop increases over time due to filter loading. The E-RREX High Bay Exhaust Sub-system is equipped with a pneumatically controlled static pressure compensation system to maintain constant air flow as the pre-filter and HEPA filter pressure drop increases over time due to filter loading. The E-RREX Lab and Storage Exhaust Sub-system is equipped with a flow velocity pressure compensation system to maintain constant air flow as the pre-filter and HEPA filter pressure drop increases over time due to filter loading. <u>Gap Analysis</u> No Gap.	

Evaluation Criteria	Discussion	Reference
1.2 Materials of construction should be appropriate for normal, abnormal and accident conditions.	[DOE Guidance Document does not provide any specific evaluation guidance discussion for this criteria]	DOE-HDBK-1169 (2.2.5) ASME AG-1
	All ductwork is either 16 or 22 gauge galvanized carbon steel, except the Fan Room Exhaust sub-system which is stainless steel. Where flanged joints are used, they are sealed with neoprene gaskets. All fans are carbon steel with protective coating, with flexible connections at the fan inlet and outlet. HEPA filter housings are stainless steel. <u>Gap Analysis</u> No Gap. Materials of construction are appropriate for normal, abnormal and accident conditions.	
1.3 Exhaust system should withstand anticipated normal, abnormal and accident system conditions and maintain confinement integrity.	As required by accident analysis to prevent accident release.	DOE-HDBK-1169 (2.4) ASHRAE Design Guide
	The E-RREX system functional classification is General Service; it is not credited in the DSA to perform a safety function. The events to be evaluated for Section E are (1) a drop/spill inside a Section E shielded cell, and (2) a low-energy process explosion inside a Section E shielded cell or laboratory, caused by an unstable lab chemical, process flammable gas or VOCs. The Lab and Storage Exhaust sub-system exhausts a Section E laboratory and storage areas, therefore would provide non-credited dose reduction for a low-energy process explosion inside a laboratory. The laboratories are exhausted via wall-mounted HEPA filter enclosures, which may be vulnerable to penetration of the filter by a missile from an explosion. The design of the HEPA enclosure access doors with an expanded metal screen in front of the HEPA filter, serves to provide adequate protection of the filters. Because of an extremely low source term in the secondary zones of Section E, the evaluated events are not credible for this subsystem. <u>Gap Analysis</u> No Gap.	

Evaluation Criteria	Discussion	Reference
1.4 Confinement ventilation systems shall have appropriate filtration to minimize release.	Address: 1) Type of filter (e.g., HEPA, sand, sintered metal); 2) Filter sizing (flow capacity and pressure drop); 3) Decontamination Factor vs. accident analysis assumptions.	ASME AG-1 DOE-HDBK-1169 (2.2.1)
	Nuclear Grade HEPA filters are procured to SRS Specification M-SPP-G-00243 which incorporates the requirements of ASME AG-1. Each E-RREX exhaust sub-system utilizes single stage HEPA filters periodically leak tested in place to confirm a filter housing filtration efficiency of 99.95%. Each system is discharged to the SRNL sand filter. Prior to receipt the filters are tested at the Independent Filter Testing Facility (FTF) to confirm an efficiency of at least 99.97% for a decontamination factor DF = 3333. Decontamination factor has not been considered in the facility DSA. The measured air flows for the E-RREX sub-systems are compared to the HEPA filters nominal sizes and capacity ratings specified by ASME AG-1, Section FC: MDF Exhaust- size and rating: 24”x24”x11.5”, 1500 CFM max. measured flow branch- 935 CFM High Bay Exh.- size and rating: 24”x30”x11.5”, 1250 CFM measured flow - 1673 CFM Lab&Stor Exh.- size and rating: 24”x24”x11.5”, 1000 CFM max. measured flow branch- 1101 CFM Fan Rm. Exh.- size and rating: 24”x24”x11.5”, 1000 CFM (x3) measured flow - 700 CFM HEPA filters are replaced when the pressure drop increase above the maximum operating point assumed when the system was designed. this varies between 2.5 and 5 inches wc based on the individual system. The High Bay exhaust and Lab & Storage exhaust (from E041 hood) exceed the nominal capacity ratings. The High Bay Exhaust sub-system uses 1950’s style “tape-in-place” configured HEPA filter mounting assemblies in lieu of enclosed filter housings. Tape forms a part of the confinement barrier and the wooden filter case is exposed to local hazards including fire . This style housing is highly dependent upon the skill of the worker to properly install and seal the HEPA filter. <u>Gap Analysis</u> Gap Number 39: Discretionary Gap - Two locations have airflow greater than the rated capacity of the HEPA filter.	

Evaluation Criteria	Discussion	Reference
2 - Ventilation System – Instrumentation & Control		
2.1 Provide system status instrumentation and/or alarms.	Address key information to ensure system operability (e.g., system delta-P, filter pressure drop).	ASME AG-1 DOE-HDBK-1169 ASHRAE Design Guide (Section 4)
	E-RREX MDF Exhaust Sub-system Local instrumentation - HEPA filter inlet static pressure, HEPA filter DP Remote instrumentation - HEPA filter inlet static pressure Alarms - MDF Fan Low Static Pressure alarm at the MDF Control Panel in Room E-065 and Control Room E-RREX High Bay Exhaust Sub-system Local instrumentation - HEPA filter DP Remote instrumentation - None Alarms - High Bay Exhaust Low Static Pressure alarm at the E-Wing Alarm Panel and Control Room E-RREX Lab and Storage Exhaust Sub-system Local instrumentation - Flow velocity gages Remote instrumentation - None Alarms - Lab and Storage Exhaust Low Static Pressure alarm at the E-Wing Alarm Panel and remotely in the Control Room E-RREX Fan Room Exhaust Sub-system Local instrumentation - HEPA filter DP Remote instrumentation - None. Alarms - None. Gap Analysis Gap Number 40: Discretionary Gap - HEPA filters are not provided with ΔP instrumentation for the Lab and Storage Exhaust Sub-system. Gap Number 41: Discretionary Gap - The Fan Room Exhaust sub-system does not have any status instrumentation or alarms.	
2.2 Interlock supply and exhaust fans to prevent positive pressure differential.	[DOE Guidance Document does not provide any specific evaluation guidance discussion for this criteria]	DOE-HDBK-1169 ASHRAE Design Guide (Section 4)
	Section E supply and exhaust fans are not interlocked. If one of the RREX systems were to shut down, a secondary to tertiary confinement zone air reversal could occur. Section E would become pressurized with respect to adjacent building areas and the outside environment. Gap Analysis Gap Number 26: Discretionary Gap - Interlocks are not provided between the supply and exhaust systems.	

Evaluation Criteria	Discussion	Reference
2.3 Post accident indication of filter break-through.	Instrumentation supports post accident planning and response; should be considered critical instrumentation for SC.	TECH-34
	All four E-RREX sub-systems discharge to the SRNL Sand Filter, which is equipped with both an inlet and outlet monitoring system that reports to the SRNL control room. See FHSF Sandfilter Evaluation Criteria 2.3 for addtional detail. <u>Gap Analysis</u> No Gap.	
2.4 Reliability of control system to maintain confinement function under normal, abnormal and accident conditions.	Address, for example, impacts of potential common mode failures from events that would require active confinement function.	DOE-HDBK-1169 (2.4)
	The E-RREX system functional classification is General Service, it is not credited in the DSA to perform a safety function. The events to be evaluated for Section E are (1) a drop/spill inside a Section E shielded cell, and (2) a low-energy process explosion inside a Section E shielded cell or laboratory, caused by an unstable lab chemical, process flammable gas or VOCs. Only the E-RREX Lab and Storage Exhaust sub-system would potentially be affected by a low-energy process explosion inside a laboratory, due to close proximity of the sub-system fans and controls on the other side of the lab module exterior wall. However, since the DSA assumes the explosion would not challenge the integrity of the lab module or the exhaust system, there is no potential common mode failure caused by this event. The E-RREX Lab and Storage Exhaust sub-system would continue to function normally. <u>Gap Analysis</u> No Gap.	

Evaluation Criteria	Discussion	Reference
2.5 Control components should fail safe.	[DOE Guidance Document does not provide any specific evaluation guidance discussion for this criteria]	DOE-HDBK-1169 (2.4)
	The E-RREX system functional classification is General Service, it is not credited in the DSA to perform a safety function. Failure of a control component would render the associated exhaust fan inoperable, whereby the standby fan may be placed in service manually. Three of the sub-systems have a standby fan; the Fan Room Exhaust sub-system does not. However it has no automatic outlet damper and no installed instrumentation. The E-RREX High Bay Exhaust and E-RREX Lab and Storage Exhaust Sub-systems have automatic pneumatically operated outlet dampers which fail open on loss of instrument air, permitting the fan system to remain in service in case of an instrument air system failure. The E-RREX MDF Exhaust Sub-system has electrically operated inlet dampers which fail-as-is on loss of power. The system has standby power available, however. <u>Gap Analysis</u> No Gap.	

Evaluation Criteria	Discussion	Reference
3 - Resistance to Internal Events – Fire		
3.1 Confinement ventilation systems should withstand credible fire events and be available to operate and maintain confinement.	Required for new facilities; as required by the accident analysis for existing facilities (discretionary). Must address protection of filter media.	DOE-HDBK-1169 (10.1) DOE-STD-1066
	As discussed in Table 4-3 transmittal letter SRNL-ROE-2007-00063, Attachment 4, Table 1, this evaluation criteria is NOT APPLICABLE. Per Ventilation System Evaluation Guidance for Safety-Related and Non-Safety Related Systems, Revision 0, January 2006, Page 21 and 22 Discussion, the evaluation of internal fire events for an existing facility is only required if the accident analysis takes credit for the active confinement ventilation system.	
3.2 Confinement ventilation systems should not propagate spread of fire.	Required for new facilities; as required by the accident analysis for existing facilities (discretionary). Address fire barriers, fire dampers arrangement.	DOE-HDBK-1169 (10.1) DOE-STD-1066
	As discussed in Table 4-3 transmittal letter SRNL-ROE-2007-00063, Attachment 4, Table 1, this evaluation criteria is NOT APPLICABLE. Per Ventilation System Evaluation Guidance for Safety-Related and Non-Safety Related Systems, Revision 0, January 2006, Page 21 and 22 Discussion, the evaluation of internal fire events for an existing facility is only required if the accident analysis takes credit for the active confinement ventilation system.	

Evaluation Criteria	Discussion	Reference
4 - Resistance to External Events – Natural Phenomena – Seismic		
4.1 Confinement ventilation systems should safely withstand earthquakes.	If the active CVS system is not credited in a seismic accident condition there is no need to evaluate that performance and/or design attribute for the confinement ventilation system (discretionary). Also, any seismic impact on the confinement ventilation system performance will be based on the current functional requirements in the DSA. NOTE: Seismic requirements may apply to Defense-in-Depth items indirectly for the protection of safety SSCs.	ASME AG-1 (AA) DOE O 420.1B DOE-HDBK-1169 (9.2)
	As discussed in Table 4-3 transmittal letter SRNL-ROE-2007-00063, Attachment 4, Table 1, this evaluation criteria is NOT APPLICABLE. Per 2004-2 Ventilation System Evaluation Guidance Addendum, March 6, 2007, Caution 4 and Ventilation System Evaluation Guidance for Safety-Related and Non-Safety Related Systems, Revision 0, January 2006, Page 22 Discussion, the evaluation of seismic events is only required if the accident analysis takes credit for the active confinement ventilation system during or after the NPH event.	

Evaluation Criteria	Discussion	Reference
5 - Resistance to External Events – Natural Phenomena – Tornado/Wind		
5.1 Confinement ventilation systems should safely withstand tornado depressurization.	If the active CVS is not credited in a tornado condition there is no need to evaluate that performance and/or design attribute for the confinement ventilation system (discretionary). Also, any tornado impact on the confinement ventilation system performance will be based on the current functional requirements in the DSA.	DOE O 420.1B DOE-HDBK-1169 (9.2)
	As discussed in Table 4-3 transmittal letter SRNL-ROE-2007-00063, Attachment 4, Table 1, this evaluation criteria is NOT APPLICABLE. Per 2004-2 Ventilation System Evaluation Guidance Addendum, March 6, 2007, Caution 4 and Ventilation System Evaluation Guidance for Safety-Related and Non-Safety Related Systems, Revision 0, January 2006, Pages 22 and 23 Discussion, the evaluation of tornado and wind events is only required if the accident analysis takes credit for the active confinement ventilation system during or after the NPH event.	
5.2 Confinement ventilation systems should withstand design wind effects on system performance.	If the active CVS is not credited in a wind condition there is no need to evaluate that performance and/or design attribute for the confinement ventilation system (discretionary). Also, any wind impact on the confinement ventilation system performance will be based on the current NP analysis in the DSA.	DOE O 420.1B DOE-HDBK-1169 (9.2)
	As discussed in Table 4-3 transmittal letter SRNL-ROE-2007-00063, Attachment 4, Table 1, this evaluation criteria is NOT APPLICABLE. Per 2004-2 Ventilation System Evaluation Guidance Addendum, March 6, 2007, Caution 4 and Ventilation System Evaluation Guidance for Safety-Related and Non-Safety Related Systems, Revision 0, January 2006, Pages 22 and 23 Discussion, the evaluation of tornado and wind events is only required if the accident analysis takes credit for the active confinement ventilation system during or after the NPH event.	

Evaluation Criteria	Discussion	Reference
6 - Other NP Events (eg. flooding, precipitation)		
6.1 Confinement ventilation system should withstand other NP events considered credible in the DSA where the confinement ventilation system is credited.	If the active confinement ventilation system is not credited for this event there is no need to evaluate that performance and/or design attribute for the confinement ventilation system (discretionary). Also, any impact on the confinement ventilation system performance will be based on the current NP analysis in the DSA.	DOE O 420.1B DOE-HDBK-1169 (9.2)
	As discussed in Table 4-3 transmittal letter SRNL-ROE-2007-00063, Attachment 4, Table 1, this evaluation criteria is NOT APPLICABLE. Per 2004-2 Ventilation System Evaluation Guidance Addendum, March 6, 2007, Caution 4 and Ventilation System Evaluation Guidance for Safety-Related and Non-Safety Related Systems, Revision 0, January 2006, Page 23 Discussion, the evaluation of other NPH events is only required if the accident analysis takes credit for the active confinement ventilation system during or after the NPH event.	

Evaluation Criteria	Discussion	Reference
7 - Range Fires / Dust Storms		
7.1 Administrative controls should be established to protect confinement ventilation systems from barrier threatening events.	Ensure appropriately thought out response to external threat is defined (e.g. pre-fire plan).	DOE O 420.1B
	The Savannah River Forestry Department is responsible for fire fighting efforts in regards to wildland fires. They also have a program of controlled burns and mechanical thinning of underbrush to limit or prevent wildland fires spreading out of control. If the fire encroaches upon SRNL, the Savannah River Site Fire Department will direct extinguishing efforts. Building 773-A has a current Fire Pre Plan and has procedures to reduce confinement ventilation system air flow (originally develop for electrical system maintenance) that will minimize soot loading of the filters in the ventilation systems. Reference: AOP-06-007 Dust storms are not an issue at the Savannah River Site due to the regional climate. <u>Gap Analysis</u> No Gap. Administrative controls are sufficient to protect the confinement ventilation systems for barrier threatening events.	

Evaluation Criteria	Discussion	Reference
8 - Testability		
8.1 Design supports the periodic inspection and testing of filters and housing, and test and inspections are conducted periodically.	Ability to test for leakage per intent of N510.	DOE-HDBK-1169 (2.3.8) ASME AG-1 ASME N510
	All E-RREX HEPA filter housings have the capability for in-place testing. In most systems, in-place test capability was added in the 1960's and testing points meet the intent of N510. For new systems, the requirements of N510 were used as the basis of design and initial testing. In-place leak testing is performed on all E-RREX HEPA filters every 18 months. HEPA Filter housings for the High Bay Exhaust use a 1950's vintage Tape-In-Place design. Housings for the MDF Exhaust and Fan Room Exhaust use Filter Housings conforming to N509, Housings for Lab and Storage Exhaust use a front load design for the 1960's. <u>Gap Analysis</u> Gap Number 42: Discretionary Gap - Tape-in-place HEPA filters do not meet the filter housing pressure boundary integrity testing requirements in N510.	
8.2 Instrumentation required to support system operability is calibrated.	Credited instrumentation should have specified calibration / surveillance requirements. Non-safety instrumentation should be calibrated as necessary to support system functionality.	DOE-HDBK-1169 (2.3.8)
	The E-RREX system functional classification is General Service, it is not credited in the DSA to perform a safety function. Therefore there is no credited instrumentation on any of the E-RREX sub-systems. E-RREX system non-safety instrumentation is calibrated only on an as-needed basis, there is no established calibration frequency. <u>Gap Analysis</u> No Gap.	

Evaluation Criteria	Discussion	Reference
8.3 Integrated system performance testing is specified and performed.	Required responses assumed in the accident analysis must be periodically confirmed including any time constraints.	DOE-HDBK-1169 (2.3.8)
	The E-RREX system functional classification is General Service, it is not credited in the DSA to perform a safety function. Airflow direction and differential pressures are verified at key points within the building during periodic air balance testing to verify that the ventilation systems are functioning as intended. Findings are forwarded to the Design Authority Engineer. Results are documented in an Air Balance Test Report, and evaluated for any necessary corrective actions. The last full air balance test for Section E was performed in 2001. Air flow directions between rooms are also verified to support radiological surveys on a routine basis with findings forwarded to the Design Authority Engineer. <u>Gap Analysis</u> No Gap	

Evaluation Criteria	Discussion	Reference
9 - Maintenance		
9.1 Filter service life program should be established.	Filter life (shelf life, service life, total life) expectancy should be determined. Consider: filter environment, maximum delta-P, radiological loading, age, and potential chemical exposure.	DOE-HDBK-1169 (3.1 & App C)
	Per requirements of SRS Engineering Standard 15888, a Filter service life program has been established for this system. This standard is the basis of the Nuclear Air Cleaning Handbook Appendix C. The filters have a maximum shelf life of 3 years and total life of 10 years. Program is tracked using the Computerized Maintenance Management System . <u>Gap Analysis</u> No Gap.	

Evaluation Criteria	Discussion	Reference
10 - Single Failure		
10.1 Failure of one component (equipment or control) shall not affect continuous operation.	Address potential failures (example failures - fan, backup power supply, switchgear).	DOE O 420.1B (Facility Safety, Chapter I, Sec. 3.b(8))
	<u>E-RREX MDF Exhaust Sub-system</u> Normal operation is two fans running with one in standby. If one of the normally running fans fails, the standby fan is started manually. All three fans are provided with both normal and backup power. <u>E-RREX High Bay Exhaust Sub-system</u> Normal operation is one fan running with the other in standby. If the normally running fan fails, the standby fan may be started manually. Both fans are supplied with normal power only. <u>E-RREX Lab and Storage Exhaust Sub-system</u> Normal operation is one fan running with the other in standby. If the normally running fan fails, the standby fan may be started manually. Both fans are supplied with normal power only. <u>E-RREX Fan Room Exhaust Sub-system</u> No standby fan is provided. The system fan is supplied with normal power only. <u>Gap Analysis</u> Gap Number 43: Discretionary Gap - The Fan Room Exhaust sub-system does not have redundant fans.	

Evaluation Criteria	Discussion	Reference
10.2 Automatic backup electrical power shall be provided to all critical instruments and equipment required to operate and monitor the confinement ventilation system.	[DOE Guidance Document does not provide any specific evaluation guidance discussion for this criteria]	DOE-HDBK-1169 (2.2.7)
	E-RREX MDF Exhaust Sub-system All three fans and associated instrumentation are provided with automatic backup electrical power. E-RREX High Bay Exhaust Sub-system Both fans are supplied with normal power only. E-RREX Lab and Storage Exhaust Sub-system Both fans are supplied with normal power only. E-RREX Fan Room Exhaust Sub-system The system fan is supplied with normal power only. HVAC supply units for areas served by the High Bay Exhaust, Lab and Storage Exhaust and Fan Room Exhaust sub-systems are not supplied with backup electrical power. Gap Analysis Gap Number 44: Discretionary Gap - Automatic backup electrical power is not provided for the following sub-systems: High Bay Exhaust, Lab & Storage Exhaust and Fan Room Exhaust.	
10.3 Backup electrical power shall be provided to all critical instruments and equipment required to operate and monitor the confinement ventilation system.	NOTE: Safety Class is addressed through previous line.	DOE-HDBK-1169 (2.2.7)
	This evaluation criteria is NOT APPLICABLE, as it is an SS-only criteria. SRNL confinement ventilation systems are evaluated to SC criteria.	

Evaluation Criteria	Discussion	Reference
11 - Other Credited Functional Requirements		
11.1 Address any specific functional requirements for the confinement ventilation system (beyond the scope of those above) credited in the DSA.	[DOE Guidance Document does not provide any specific evaluation guidance discussion for this criteria]	10 CFR 830, Subpart B
	The E-RREX system functional classification is General Service, it is not credited in the DSA to perform a safety function. There are no functional requirements for the system credited in the DSA. <u>Gap Analysis</u> No Gap.	

Evaluation Criteria	Discussion	Reference
0 - Ventilation System Description & References		
0.1 System Description	N/A	N/A
	<u>System Description</u> Section E is isolated from Section B by double doors on each floor to maintain independent ventilation control. The Section E ventilation system is divided into four zones. Zone 1 is the innermost zone and includes the shielded cells and adjacent areas which have the greatest potential for radioactive contamination. Zones 2, 3, and 4 surround Zone 1 and contain offices and labs with lower potential for radioactive contamination. The Section E Heating Ventilating and Air Conditioning (HVAC) Systems provide once-through conditioned air to zones 2,3, & 4 at lower flow rates than the area exhaust systems to maintain confinement of potential contamination. Reference Attachment 11 Figure A for a system single line. Air is exhausted from Zone 1 by the Cell Exhaust (CE) systems, Regulated Room Exhaust (RREX) systems, Local Hood Exhaust (LHEX) systems, and Heating and Ventilating (HV) systems. The Zone 1 HVAC systems are designed to supply make-up air at a lower total flow than the total exhaust air flow in order to maintain a net inflow into Zone 1 from Zones 2, 3, and 4, insuring positive confinement of any contamination. Zone 2 contains offices on the Main Floor and mock-up, maintenance and utility shops on the Service Floor. There are no exhaust systems in Zone 2. The HVAC system provides excess air to Zone 2 to ensure a positive air flow into Zone 1. Zone 3 contains the service floor truck bay and cask storage areas, Radioactive Material Handling Facility Lab, and RCO lab and storage areas. Air is exhausted by an LHEX system. Excess supply air is provided to ensure a positive air flow into Zone 1. Motorized dampers are installed to isolate Zone 1 from the truck bay if either the inner or outer door is open. Zone 4 includes the Manipulator Repair Facility. There are no exhaust systems in Zone 4, although a portion of the clean room air is recycled through the HVAC units. The HVAC system provides excess air to Zone 4 to ensure a positive air flow into Zone 1. The building shell, walls and roof associated with the HVAC systems are qualified to PC-1.	

Evaluation Criteria	Discussion	Reference
0.2 System References	N/A	N/A

System Design Descriptions
- o M-SYD-A-00022, HVAC Supply and Miscellaneous Exhaust System Design Description
- o M-SYD-A-00024, IA, PLTA & Compressor Alternate CW

Drawings
- o M-M5-A-0205, Section E HVAC Supply Air Balance Riser Diagram
- o M-M5-A-0206, Section E HVAC Exhaust Air Balance Riser Diagram
- o W167721 - HLC HVAC Flow & Control Diagram

Test Procedures

- o TP-02-773A-EWING-01, Sec E Air Balance Test Procedure
- o 5Q1.2, Procedure 484, Building Air Survey
- o TO-05-027, 773-A D/G Annual Design Load Test

Round Sheets and Other Procedures
- o ROD-OPS-2002-002 - Control Area Operator (CAO) Round Sheets
- o ROD-OPS-2002-003 - Facility Operator (FO) Round Sheets
- o AOP-06-007, Wildland Fire, Facility Ventilation Shutdown and/or Evacuation

Standards
- o DuPont Engineering Specifications 3027, 3017, 5998, 7591, 8728, H16J, SH1A.
- o SRS Procurement Specification M-SPP-G-00243, HEPA Filter Specification
- o SRS Engineering Standard 15888, HEPA Filter Requirements
- o DOE-STD-3020-2005, DOE Technical Standard - Specification for HEPA Filters Used by DOE Contractors
- o DOE-STD-3025-2007, DOE Technical Standard - Quality Assurance Inspection and Testing of HEPA Filters
- o UL 586, UL Standard for Safety, High Efficiency, Particulate, Air Filter Units, 1996
- o ANSI/ASME NQA-1, Quality Assurance Program Requirements for Nuclear Facilities

Miscellaneous
- o Ventilation System Evaluation Guidance for Safety-Related and Non-Safety Related Systems, January 2006
- o 2004-2 Ventilation System Evaluation Guidance Addendum, March 2007
- o SRNL-ROE-2007-00063, SRNL Table 4-3 Submittal to DOE-SR, April 2007
- o WSRC-SA-2, SRNL Technical Area (TA) Documented Safety Analysis (DSA), Revision 3
- o WSRC-TS-97-00014, SRNL Technical Area (TA) Technical Safety Requirements (TSRs), Revision 4
- o SRNL-ESD-2007-00017, Structural Integrity Program Scope, Resources & Estimate, February 2007

Evaluation Criteria	Discussion	Reference
1 - Ventilation System – General Criteria		
1.1 Pressure differential should be maintained between zones and atmosphere.	Number of zones as credited by accident analysis to control hazardous material release; demonstrate by use considering potential in-leakage.	DOE-HDBK-1169 (2.2.9) ASHRAE Design Guide
	The Section E zone flows and ventilation system interactions are described in the specific SDD documents. Differential pressures (DPs) are not measured directly, but are maintained between zones by monitoring and balancing air flows. Periodic monitoring is conducted, including hood face velocities (Procedure 4Q/401) and air flow directions (Procedure 5Q1.2/484). Air balances are regularly conducted on all ventilation systems within a building section to verify facility design basis flows, as documented by the Section E Air Balance. Key system parameters are recorded on a daily and weekly basis which allows monitoring of ventilation system function and performance. The HVAC Systems are designed to maintain the primary containment zones at a negative pressure with respect to surrounding areas such that a positive airflow is maintained into the primary confinement zones from the secondary confinement zones. Confinement Zones o Primary Confinement High Level Cells / Gloveboxes / Ducting through a testable HEPA filter stage o Secondary Confinement HLC Operating Area / Labs / Filter Room / Fan Room o Tertiary Confinement Corridors / Offices / General Service Floor Area o Administrative Area Offices <u>Gap Analysis</u> No Gap - DPs are properly maintained under normal conditions. Maintenance of differential pressure between building zones is not credited in the DSA for prevention or mitigation of a radiological release.	
1.2 Materials of construction should be appropriate for normal, abnormal and accident conditions.	[DOE Guidance Document does not provide any specific evaluation guidance discussion for this criteria]	DOE-HDBK-1169 (2.2.5) ASME AG-1
	The Section E HVAC (Supply Air) systems provide clean conditioned air to the building. Ducting is fabricated from galvanized steel. Supply fans are fabricated from carbon steel. <u>Gap Analysis</u> No Gap - Materials of construction are appropriate for normal, abnormal and accident conditions.	
1.3 Exhaust system should withstand anticipated normal, abnormal and accident system conditions and maintain confinement integrity.	As required by accident analysis to prevent accident release.	DOE-HDBK-1169 (2.4) ASHRAE Design Guide
	The system evaluated is a supply (not exhaust) system. See the appropriate exhaust systems for Section E (Attachments 1, 2, 4 and 5) for evaluation of this criteria. <u>Gap Analysis</u> No Gap	

Evaluation Criteria	Discussion	Reference
1.4 Confinement ventilation systems shall have appropriate filtration to minimize release.	Address: 1) Type of filter (e.g., HEPA, sand, sintered metal); 2) Filter sizing (flow capacity and pressure drop); 3) Decontamination Factor vs. accident analysis assumptions.	ASME AG-1 DOE-HDBK-1169 (2.2.1)
	The Section E HVAC (Supply Air) systems have replaceable filters, installed to filter incoming supply air. <u>Gap Analysis</u> Gap Number 33: Discretionary Gap - The manipulator shop, a secondary zone, uses re-circulated air without HEPA filtration.	

Evaluation Criteria	Discussion	Reference
2 - Ventilation System – Instrumentation & Control		
2.1 Provide system status instrumentation and/or alarms.	Address key information to ensure system operability (e.g., system delta-P, filter pressure drop).	ASME AG-1 DOE-HDBK-1169 ASHRAE Design Guide (Section 4)
	The Section E HVAC (Supply Air) systems have neither status information nor alarms provided to the Control Area Operator (CAO) in the C041 Control Room (CR). <u>Gap Analysis</u> Gap Number 34: Discretionary Gap - The systems do not have any remote system status instrumentation, control or alarms.	
2.2 Interlock supply and exhaust fans to prevent positive pressure differential.	[DOE Guidance Document does not provide any specific evaluation guidance discussion for this criteria]	DOE-HDBK-1169 ASHRAE Design Guide (Section 4)
	Section E supply and exhaust fans are not interlocked. If one of the exhaust systems were to shut down, a secondary to tertiary confinement zone air reversal could occur. Section E would become pressurized with respect to adjacent building areas and the outside environment. <u>Gap Analysis</u> Gap Number 26: Discretionary Gap - Interlocks are not provided between the supply and exhaust systems.	
2.3 Post accident indication of filter break-through.	Instrumentation supports post accident planning and response; should be considered critical instrumentation for SC.	TECH-34
	The Section E HVAC (Supply Air) systems are not impacted by the accident scenarios related to exhaust filter break-through. <u>Gap Analysis</u> No Gap - Section E HVAC systems do not have exhaust filters where breakthrough would occur.	
2.4 Reliability of control system to maintain confinement function under normal, abnormal and accident conditions.	Address, for example, impacts of potential common mode failures from events that would require active confinement function.	DOE-HDBK-1169 (2.4)
	Not applicable. The fans are not credited in a confinement function, but serve to provide conditioned outside air to the facility. <u>Gap Analysis</u> No Gap	

Evaluation Criteria	Discussion	Reference
2.5 Control components should fail safe.	[DOE Guidance Document does not provide any specific evaluation guidance discussion for this criteria]	DOE-HDBK-1169 (2.4)
	The Section E HVAC supply fans fail in a safe condition. The fans are not credited in a confinement function, but serve to provide conditioned outside air to the facility. The fan unit intake dampers shut on loss of power to prevent backflow through the fans. <u>Gap Analysis</u> No Gap	

Evaluation Criteria	Discussion	Reference
3 - Resistance to Internal Events – Fire		
3.1 Confinement ventilation systems should withstand credible fire events and be available to operate and maintain confinement.	Required for new facilities; as required by the accident analysis for existing facilities (discretionary). Must address protection of filter media.	DOE-HDBK-1169 (10.1) DOE-STD-1066
	As discussed in Table 4-3 transmittal letter SRNL-ROE-2007-00063, Attachment 4, Table 1, this evaluation criteria is NOT APPLICABLE. Per Ventilation System Evaluation Guidance for Safety-Related and Non-Safety Related Systems, Revision 0, January 2006, Page 21 and 22 Discussion, the evaluation of internal fire events for an existing facility is only required if the accident analysis takes credit for the active confinement ventilation system.	
3.2 Confinement ventilation systems should not propagate spread of fire.	Required for new facilities; as required by the accident analysis for existing facilities (discretionary). Address fire barriers, fire dampers arrangement.	DOE-HDBK-1169 (10.1) DOE-STD-1066
	As discussed in Table 4-3 transmittal letter SRNL-ROE-2007-00063, Attachment 4, Table 1, this evaluation criteria is NOT APPLICABLE. Per Ventilation System Evaluation Guidance for Safety-Related and Non-Safety Related Systems, Revision 0, January 2006, Page 21 and 22 Discussion, the evaluation of internal fire events for an existing facility is only required if the accident analysis takes credit for the active confinement ventilation system.	

Evaluation Criteria	Discussion	Reference
4 - Resistance to External Events – Natural Phenomena – Seismic		
4.1 Confinement ventilation systems should safely withstand earthquakes.	If the active CVS system is not credited in a seismic accident condition there is no need to evaluate that performance and/or design attribute for the confinement ventilation system (discretionary). Also, any seismic impact on the confinement ventilation system performance will be based on the current functional requirements in the DSA. NOTE: Seismic requirements may apply to Defense-in-Depth items indirectly for the protection of safety SSCs.	ASME AG-1 (AA) DOE O 420.1B DOE-HDBK-1169 (9.2)
	As discussed in Table 4-3 transmittal letter SRNL-ROE-2007-00063, Attachment 4, Table 1, this evaluation criteria is NOT APPLICABLE. Per 2004-2 Ventilation System Evaluation Guidance Addendum, March 6, 2007, Caution 4 and Ventilation System Evaluation Guidance for Safety-Related and Non-Safety Related Systems, Revision 0, January 2006, Page 22 Discussion, the evaluation of seismic events is only required if the accident analysis takes credit for the active confinement ventilation system during or after the NPH event.	

Evaluation Criteria	Discussion	Reference
5 - Resistance to External Events – Natural Phenomena – Tornado/Wind		
5.1 Confinement ventilation systems should safely withstand tornado depressurization.	If the active CVS is not credited in a tornado condition there is no need to evaluate that performance and/or design attribute for the confinement ventilation system (discretionary). Also, any tornado impact on the confinement ventilation system performance will be based on the current functional requirements in the DSA.	DOE O 420.1B DOE-HDBK-1169 (9.2)
	As discussed in Table 4-3 transmittal letter SRNL-ROE-2007-00063, Attachment 4, Table 1, this evaluation criteria is NOT APPLICABLE. Per 2004-2 Ventilation System Evaluation Guidance Addendum, March 6, 2007, Caution 4 and Ventilation System Evaluation Guidance for Safety-Related and Non-Safety Related Systems, Revision 0, January 2006, Pages 22 and 23 Discussion, the evaluation of tornado and wind events is only required if the accident analysis takes credit for the active confinement ventilation system during or after the NPH event.	
5.2 Confinement ventilation systems should withstand design wind effects on system performance.	If the active CVS is not credited in a wind condition there is no need to evaluate that performance and/or design attribute for the confinement ventilation system (discretionary). Also, any wind impact on the confinement ventilation system performance will be based on the current NP analysis in the DSA.	DOE O 420.1B DOE-HDBK-1169 (9.2)
	As discussed in Table 4-3 transmittal letter SRNL-ROE-2007-00063, Attachment 4, Table 1, this evaluation criteria is NOT APPLICABLE. Per 2004-2 Ventilation System Evaluation Guidance Addendum, March 6, 2007, Caution 4 and Ventilation System Evaluation Guidance for Safety-Related and Non-Safety Related Systems, Revision 0, January 2006, Pages 22 and 23 Discussion, the evaluation of tornado and wind events is only required if the accident analysis takes credit for the active confinement ventilation system during or after the NPH event.	

Evaluation Criteria	Discussion	Reference
6 - Other NP Events (eg. flooding, precipitation)		
6.1 Confinement ventilation system should withstand other NP events considered credible in the DSA where the confinement ventilation system is credited.	If the active confinement ventilation system is not credited for this event there is no need to evaluate that performance and/or design attribute for the confinement ventilation system (discretionary). Also, any impact on the confinement ventilation system performance will be based on the current NP analysis in the DSA.	DOE O 420.1B DOE-HDBK-1169 (9.2)
	As discussed in Table 4-3 transmittal letter SRNL-ROE-2007-00063, Attachment 4, Table 1, this evaluation criteria is NOT APPLICABLE. Per 2004-2 Ventilation System Evaluation Guidance Addendum, March 6, 2007, Caution 4 and Ventilation System Evaluation Guidance for Safety-Related and Non-Safety Related Systems, Revision 0, January 2006, Page 23 Discussion, the evaluation of other NPH events is only required if the accident analysis takes credit for the active confinement ventilation system during or after the NPH event.	

Evaluation Criteria	Discussion	Reference
7 - Range Fires / Dust Storms		
7.1 Administrative controls should be established to protect confinement ventilation systems from barrier threatening events.	Ensure appropriately thought out response to external threat is defined (e.g. pre-fire plan).	DOE O 420.1B
	The Savannah River Forestry Department is responsible for fire fighting efforts in regards to wildland fires. They also have a program of controlled burns and mechanical thinning of underbrush to limit or prevent wildland fires spreading out of control. If the fire encroaches upon SRNL, the Savannah River Site Fire Department will direct extinguishing efforts. Building 773-A has a current Fire Pre Plan and has procedures to reduce confinement ventilation system air flow (originally develop for electrical system maintenance) that will minimize soot loading of the filters in the ventilation systems. Reference: AOP-06-007 Dust storms are not an issue at the Savannah River Site due to the regional climate. <u>Gap Analysis</u> No Gap. Administrative controls are sufficient to protect the confinement ventilation systems for barrier threatening events.	

Evaluation Criteria	Discussion	Reference
8 - Testability		
8.1 Design supports the periodic inspection and testing of filters and housing, and test and inspections are conducted periodically.	Ability to test for leakage per intent of N510.	DOE-HDBK-1169 (2.3.8) ASME AG-1 ASME N510
	Section E HVAC supply fan system filters are changed out periodically -nominally on a semi-annual basis. <u>Gap Analysis</u> No Gap - Section E HVAC systems have no testable or inspectable exhaust filters.	
8.2 Instrumentation required to support system operability is calibrated.	Credited instrumentation should have specified calibration / surveillance requirements. Non-safety instrumentation should be calibrated as necessary to support system functionality.	DOE-HDBK-1169 (2.3.8)
	The Section E HVAC (Supply Air) systems have no calibration requirements in the TSR. System non-safety instrumentation is calibrated as necessary to support system functionality: when the instrument is installed. <u>Gap Analysis</u> No Gap - Section E HVAC systems have no calibration requirements.	
8.3 Integrated system performance testing is specified and performed.	Required responses assumed in the accident analysis must be periodically confirmed including any time constraints.	DOE-HDBK-1169 (2.3.8)
	The E-HVAC system functional classification is General Service, it is not credited in the DSA to perform a safety function. Airflow direction and differential pressures are verified at key points within the building during periodic air balance testing to verify that the ventilation systems are functioning as intended. Findings are forwarded to the Design Authority Engineer. Results are documented in an Air Balance Test Report, and evaluated for any necessary corrective actions. The last full air balance test for Section E was performed in 2001. Air flow directions between rooms are also verified to support radiological surveys on a routine basis with findings forwarded to the Design Authority Engineer.. <u>Gap Analysis</u> No Gap	

Evaluation Criteria	Discussion	Reference
9 - Maintenance		
9.1 Filter service life program should be established.	Filter life (shelf life, service life, total life) expectancy should be determined. Consider: filter environment, maximum delta-P, radiological loading, age, and potential chemical exposure.	DOE-HDBK-1169 (3.1 & App C)
	Sections E HVAC units do not use HEPA filters. A service life program is not required. <u>Gap Analysis</u> No Gap - Section E HVAC systems do not use HEPA filters.	

Evaluation Criteria	Discussion	Reference
10 - Single Failure		
10.1 Failure of one component (equipment or control) shall not affect continuous operation.	Address potential failures (example failures - fan, backup power supply, switchgear).	DOE O 420.1B (Facility Safety, Chapter I, Sec. 3.b(8))
	The Section E HVAC (Supply Air) systems have no installed standby components. Procedures are established and in place to identify equipment failures and to implement mitigating actions. No single failure in the Section E HVAC system will prevent critical confinement equipment from operating. Also, failure of an individual supply unit will not cause a differential pressure inversion between any of the confinement zones. <u>Gap Analysis</u> No Gap.	
10.2 Automatic backup electrical power shall be provided to all critical instruments and equipment required to operate and monitor the confinement ventilation system.	[DOE Guidance Document does not provide any specific evaluation guidance discussion for this criteria]	DOE-HDBK-1169 (2.2.7)
	The Section E HVAC (Supply Air) systems will not operate in the event of a power failure. <u>Gap Analysis</u> No Gap - Operation of the HVAC supply units is not necessary to maintain confinement during a loss of power.	
10.3 Backup electrical power shall be provided to all critical instruments and equipment required to operate and monitor the confinement ventilation system.	NOTE: Safety Class is addressed through previous line.	DOE-HDBK-1169 (2.2.7)
	This evaluation criteria is NOT APPLICABLE, as it is an SS-only criteria. SRNL confinement ventilation systems are evaluated to SC criteria.	

Evaluation Criteria	Discussion	Reference
11 - Other Credited Functional Requirements		
11.1 Address any specific functional requirements for the confinement ventilation system (beyond the scope of those above) credited in the DSA.	[DOE Guidance Document does not provide any specific evaluation guidance discussion for this criteria]	10 CFR 830, Subpart B
	None <u>Gap Analysis</u> No Gap	

Evaluation Criteria	Discussion	Reference
0 - Ventilation System Description & References		
0.1 System Description	N/A	N/A
	<u>System Description</u> The Section E Local Hood Exhaust (E-LHEX) System consists of two independent sub-systems that exhaust areas in the Section E secondary confinement zone. Both E-LHEX sub-systems discharge to the SRNL Sand Filter system via branch ducts that connect to the sand filter inlet duct on the Section E roof. Reference Attachment 11 Figure A for a system single line. <u>E-LHEX High Bay Exhaust Sub-system</u> Two (2) E-LHEX Fans exhaust the High Bay Loading Area (Room E-079), using single-stage HEPA filtration, with one filter at each of the two fan inlets. Normal operation is one fan running with the other in standby. Both fans are supplied with normal power only. If the normally running fan fails, alarms activate locally in the Section E cell operating area and remotely in the C041 Control Room. Note - the High Bay Loading Area is also exhausted by the E-RREX system, which is covered in a separate Table 5-1. <u>E-LHEX Hood Exhaust Sub-system</u> E-LHEX Fan E14 (EP-5916) exhausts the fume hood in Room E-075, in the Cell Block A loading area, using single-stage HEPA filtration with one filter at the fan inlet. If the fan fails, alarms are activated in the Section E operating area and in the C041 Control Room. The building shell, walls and roof associated with the LHEX systems are qualified to PC-1.	

Evaluation Criteria	Discussion	Reference
0.2 System References	N/A	N/A
	System Design Descriptions o M-SYD-A-00022, 773-A Section E, HVAC Supply and Miscellaneous Exhaust o G-SYD-A-00002, SRNL Sand Filter System Design Description o M-SYD-A-00024, IA, PLTA & Compressor Alternate CW Drawings o M-M5-A-0206, Section E Exhaust Systems Air Balance Riser Diagram o W144392, Basic Design Manual Section E H&V Flow Diagram o P-PH-A-0076, High Level Caves Supply and Exhaust Systems Air Flow and Balance o W157496, Heating and Ventilating, Section E High Level Caves Main Floor Plan Test Procedures o TP-02-773A-EWING-01, Section E Air Balance Test Procedure o 5Q1.2, Procedure 484, Building Air Survey o TO-05-027, 773-A D/G Annual Design Load Test Round Sheets and Other Procedures o ROD-OPS-2002-002 - Control Area Operator (CAO) Round Sheets o ROD-OPS-2002-003 - Facility Operator (FO) Round Sheets o AOP-06-007, Wildland Fire, Facility Ventilation Shutdown and/or Evacuation Standards o DuPont Engineering Specifications 3027, 3017, 5998, 7591, 8728, H16J, SH1A. o SRS Procurement Specification M-SPP-G-00243, HEPA Filter Specification o SRS Engineering Standard 15888, HEPA Filter Requirements o DOE-STD-3020-2005, DOE Technical Standard - Specification for HEPA Filters Used by DOE Contractors o DOE-STD-3025-2007, DOE Technical Standard - Quality Assurance Inspection and Testing of HEPA Filters o UL 586, UL Standard for Safety, High Efficiency, Particulate, Air Filter Units, 1996 o ANSI/ASME NQA-1, Quality Assurance Program Requirements for Nuclear Facilities Miscellaneous o Ventilation System Evaluation Guidance for Safety-Related and Non-Safety Related Systems, January 2006 o 2004-2 Ventilation System Evaluation Guidance Addendum, March 2007 o SRNL-ROE-2007-00063, SRNL Table 4-3 Submittal to DOE-SR, April 2007 o WSRC-SA-2, SRNL Technical Area (TA) Documented Safety Analysis (DSA), Revision 3 o WSRC-TS-97-00014, SRNL Technical Area (TA) Technical Safety Requirements (TSRs), Revision 4 o SRNL-ESD-2007-00017, Structural Integrity Program Scope, Resources & Estimate, February 2007	

Evaluation Criteria	Discussion	Reference
1 - Ventilation System – General Criteria		
1.1 Pressure differential should be maintained between zones and atmosphere.	Number of zones as credited by accident analysis to control hazardous material release; demonstrate by use considering potential in-leakage.	DOE-HDBK-1169 (2.2.9) ASHRAE Design Guide
	Confinement Zones o Primary Confinement Shielded Cells / Gloveboxes / Ducting through 1st testable HEPA filter stage o Secondary Confinement Cell Operating & Service Areas / Cell roof / HEPA filter room / Fan Room o Tertiary Confinement Corridors / Offices / General Service Floor Area See Table 5-1 for the Cell Exhaust System for a discussion of the Section E primary confinement zones. The E-LHEX exhaust systems serve secondary confinement zones only. Secondary confinement zones consist of the cell large equipment loading area (high bay), cell small equipment loading areas, manipulator glovebox room, offices, change/restrooms and cell operating areas. These areas have a limited quantity of direct supply air; the major portion is drawn from the tertiary confinement zone. These areas have a number of direct exhaust systems for locations with a higher contamination potential. Tertiary confinement zones consist of office, storage, maintenance and support spaces surrounding the secondary confinement zone. The spaces have a mixture of recirculating HVAC systems, 100% outside air HVAC systems and unfiltered exhaust systems. Differential pressures between zones are not measured directly, but instead are maintained by periodic monitoring of air flow, and by periodic performance of air flow balance tests. Air flow direction checks are performed quarterly per Manual 5Q1.2 - 484. Air balance tests are performed periodically to ensure proper air flows and room differential pressures. The last such test for Section E was performed in 2001. <u>Gap Analysis</u> No Gap.	
1.2 Materials of construction should be appropriate for normal, abnormal and accident conditions.	[DOE Guidance Document does not provide any specific evaluation guidance discussion for this criteria]	DOE-HDBK-1169 (2.2.5) ASME AG-1
	All ductwork is either 16 or 22 gauge galvanized carbon steel. Where flanged joints are used, they are sealed with neoprene gaskets. All fans are carbon steel with protective coating, with flexible connections at the fan inlet and outlet. HEPA filter housings are stainless steel. <u>Gap Analysis</u> No Gap. Materials of construction are appropriate for normal, abnormal and accident conditions.	

Evaluation Criteria	Discussion	Reference
1.3 Exhaust system should withstand anticipated normal, abnormal and accident system conditions and maintain confinement integrity.	As required by accident analysis to prevent accident release.	DOE-HDBK-1169 (2.4) ASHRAE Design Guide
	The E-LHEX system functional classification is General Services, it is not credited in the DSA to perform a safety function. The events to be evaluated for Section E are (1) a drop/spill inside a Section E shielded cell, and (2) a low-energy process explosion inside a Section E shielded cell or laboratory, caused by an unstable lab chemical, flammable gas or VOCs. Since neither of the E-LHEX sub-systems serves these particular areas, the E-LHEX system HEPA filters are not vulnerable to damage from the above events. <u>Gap Analysis</u> No Gap.	

Evaluation Criteria	Discussion	Reference
1.4 Confinement ventilation systems shall have appropriate filtration to minimize release.	Address: 1) Type of filter (e.g., HEPA, sand, sintered metal); 2) Filter sizing (flow capacity and pressure drop); 3) Decontamination Factor vs. accident analysis assumptions.	ASME AG-1 DOE-HDBK-1169 (2.2.1)
	Nuclear Grade HEPA filters are procured to SRS Specification M-SPP-G-00243 which incorporates the requirements of ASME AG-1. Each E-LHEX exhaust sub-system utilizes single stage HEPA filters periodically leak tested in place to confirm a filter housing filtration efficiency of 99.95%. Prior to receipt the filters are tested at the Independent Filter Testing Facility (FTF) to confirm an efficiency of at least 99.97% for a decontamination factor DF = 3333. Decontamination factor has not been considered in the facility DSA. The measured air flows for the E-RREX sub-systems are compared to the HEPA filters nominal sizes and capacity ratings specified by ASME AG-1, Section FC: Hood Exhaust- size and rating: 24”x24”x11.5”, 1000 CFM max. measured flow branch- 740 CFM High Bay Exh.- size and rating: 24”x30”x5.88”, 500 CFM measured flow - 717 CFM The High Bay Exhaust sub-system exceeds the nominal capacity ratings. The air is discharged to the sand filter before it is released to the environment. Per DOE-HNBK-1169, Section 3.3.6.1, “Normal in-service pressures should be limited to 3 to 5 in.wc above startup pressure”. The HEPA filters are not operated outside this guideline; filters are changed if a 5” differential pressure is encountered. The E-LHEX sub-systems are equipped with pneumatically controlled static pressure compensation systems to maintain a constant air flow as the pre-filter and HEPA filter pressure drop increases over time due to filter loading. The High Bay Exhaust sub-system uses 1950’s style “tape-in-place” configured HEPA filter mounting assemblies in lieu of enclosed filter housings. Tape forms a part of the confinement barrier and the wooden filter case is exposed to local hazards including fire . This style housing is highly dependent upon the skill of the worker to properly install and seal the HEPA filter. <u>Gap Analysis</u> Gap Number 35: Discretionary Gap - High Bay Exhaust Sub-System airflow exceeds HEPA filter rated capacity.	

Evaluation Criteria	Discussion	Reference
2 - Ventilation System – Instrumentation & Control		
2.1 Provide system status instrumentation and/or alarms.	Address key information to ensure system operability (e.g., system delta-P, filter pressure drop).	ASME AG-1 DOE-HDBK-1169 ASHRAE Design Guide (Section 4)
	E-LHEX High Bay Exhaust Sub-system Local instrumentation - HEPA filter DP indicator Remote instrumentation - None Alarms - Room E-079 Low Static Pressure alarms locally at the E-Wing Alarm Panel and remotely in the Control Room E-LHEX Hood Exhaust Sub-system Local instrumentation - Flow velocity gage at fan inlet / HEPA filter DP indicator Remote instrumentation - None Alarms - E075 LHEX Low Static Pressure alarm locally at the E-Wing Alarm Panel and remotely in the Control Room Gap Analysis No Gap.	
2.2 Interlock supply and exhaust fans to prevent positive pressure differential.	[DOE Guidance Document does not provide any specific evaluation guidance discussion for this criteria]	DOE-HDBK-1169 ASHRAE Design Guide (Section 4)
	Section E supply and exhaust fans are not interlocked. If one of the LHEX systems were to shut down, a secondary to tertiary confinement zone air reversal could occur. Section E would become pressurized with respect to adjacent building areas and the outside environment. Gap Analysis Gap Number 26: Discretionary Gap - Interlocks are not provided between the supply and exhaust systems.	
2.3 Post accident indication of filter break-through.	Instrumentation supports post accident planning and response; should be considered critical instrumentation for SC.	TECH-34
	These system then discharges to the SRNL Sand Filter which is equipped with both an inlet and outlet monitoring system which reports to the SRNL control room. See attachment 9 Evaluation Criteria 2.3 for addtional detail.. Gap Analysis No Gap.	

Evaluation Criteria	Discussion	Reference
2.4 Reliability of control system to maintain confinement function under normal, abnormal and accident conditions.	Address, for example, impacts of potential common mode failures from events that would require active confinement function.	DOE-HDBK-1169 (2.4)
	The E-LHEX system functional classification is General Services, it is not credited in the DSA to perform a safety function. The events to be evaluated for Section E are (1) a drop/spill inside a Section E shielded cell, and (2) a low-energy process explosion inside a Section E shielded cell or laboratory, caused by an unstable lab chemical, flammable gas or VOCs. Since neither of the E-LHEX sub-systems serves these particular areas, the E-LHEX system would not be affected by a low-energy process explosion inside a laboratory, since the DSA assumes the explosion would not challenge the integrity of the lab module. Therefore there is no potential common mode failure caused by this event. The E-LHEX sub-systems would continue to function normally. <u>Gap Analysis</u> No Gap.	
2.5 Control components should fail safe.	[DOE Guidance Document does not provide any specific evaluation guidance discussion for this criteria]	DOE-HDBK-1169 (2.4)
	The E-LHEX system functional classification is General Service. It is not credited in the DSA to perform a safety function. Failure of a control component would render the associated hood exhaust fan inoperable, whereby for the High Bay Exhaust fan, the standby fan may be placed in service manually. The hood exhaust fan has no standby fan. In case of fan failure an alarm is sounded in the main control room and all activities in the hood are stopped. Both sub-systems have automatic pneumatically operated outlet dampers which fail open on loss of instrument air, permitting the fan system to remain in service in case of an instrument air system failure. <u>Gap Analysis</u> No Gap.	

Evaluation Criteria	Discussion	Reference
3 - Resistance to Internal Events – Fire		
3.1 Confinement ventilation systems should withstand credible fire events and be available to operate and maintain confinement.	Required for new facilities; as required by the accident analysis for existing facilities (discretionary). Must address protection of filter media.	DOE-HDBK-1169 (10.1) DOE-STD-1066
	As discussed in Table 4-3 transmittal letter SRNL-ROE-2007-00063, Attachment 4, Table 1, this evaluation criteria is NOT APPLICABLE. Per Ventilation System Evaluation Guidance for Safety-Related and Non-Safety Related Systems, Revision 0, January 2006, Page 21 and 22 Discussion, the evaluation of internal fire events for an existing facility is only required if the accident analysis takes credit for the active confinement ventilation system.	
3.2 Confinement ventilation systems should not propagate spread of fire.	Required for new facilities; as required by the accident analysis for existing facilities (discretionary). Address fire barriers, fire dampers arrangement.	DOE-HDBK-1169 (10.1) DOE-STD-1066
	As discussed in Table 4-3 transmittal letter SRNL-ROE-2007-00063, Attachment 4, Table 1, this evaluation criteria is NOT APPLICABLE. Per Ventilation System Evaluation Guidance for Safety-Related and Non-Safety Related Systems, Revision 0, January 2006, Page 21 and 22 Discussion, the evaluation of internal fire events for an existing facility is only required if the accident analysis takes credit for the active confinement ventilation system.	

Evaluation Criteria	Discussion	Reference
4 - Resistance to External Events – Natural Phenomena – Seismic		
4.1 Confinement ventilation systems should safely withstand earthquakes.	If the active CVS system is not credited in a seismic accident condition there is no need to evaluate that performance and/or design attribute for the confinement ventilation system (discretionary). Also, any seismic impact on the confinement ventilation system performance will be based on the current functional requirements in the DSA. NOTE: Seismic requirements may apply to Defense-in-Depth items indirectly for the protection of safety SSCs.	ASME AG-1 (AA) DOE O 420.1B DOE-HDBK-1169 (9.2)
	As discussed in Table 4-3 transmittal letter SRNL-ROE-2007-00063, Attachment 4, Table 1, this evaluation criteria is NOT APPLICABLE. Per 2004-2 Ventilation System Evaluation Guidance Addendum, March 6, 2007, Caution 4 and Ventilation System Evaluation Guidance for Safety-Related and Non-Safety Related Systems, Revision 0, January 2006, Page 22 Discussion, the evaluation of seismic events is only required if the accident analysis takes credit for the active confinement ventilation system during or after the NPH event.	

Evaluation Criteria	Discussion	Reference
5 - Resistance to External Events – Natural Phenomena – Tornado/Wind		
5.1 Confinement ventilation systems should safely withstand tornado depressurization.	If the active CVS is not credited in a tornado condition there is no need to evaluate that performance and/or design attribute for the confinement ventilation system (discretionary). Also, any tornado impact on the confinement ventilation system performance will be based on the current functional requirements in the DSA.	DOE O 420.1B DOE-HDBK-1169 (9.2)
	As discussed in Table 4-3 transmittal letter SRNL-ROE-2007-00063, Attachment 4, Table 1, this evaluation criteria is NOT APPLICABLE. Per 2004-2 Ventilation System Evaluation Guidance Addendum, March 6, 2007, Caution 4 and Ventilation System Evaluation Guidance for Safety-Related and Non-Safety Related Systems, Revision 0, January 2006, Pages 22 and 23 Discussion, the evaluation of tornado and wind events is only required if the accident analysis takes credit for the active confinement ventilation system during or after the NPH event.	
5.2 Confinement ventilation systems should withstand design wind effects on system performance.	If the active CVS is not credited in a wind condition there is no need to evaluate that performance and/or design attribute for the confinement ventilation system (discretionary). Also, any wind impact on the confinement ventilation system performance will be based on the current NP analysis in the DSA.	DOE O 420.1B DOE-HDBK-1169 (9.2)
	As discussed in Table 4-3 transmittal letter SRNL-ROE-2007-00063, Attachment 4, Table 1, this evaluation criteria is NOT APPLICABLE. Per 2004-2 Ventilation System Evaluation Guidance Addendum, March 6, 2007, Caution 4 and Ventilation System Evaluation Guidance for Safety-Related and Non-Safety Related Systems, Revision 0, January 2006, Pages 22 and 23 Discussion, the evaluation of tornado and wind events is only required if the accident analysis takes credit for the active confinement ventilation system during or after the NPH event.	

Evaluation Criteria	Discussion	Reference
6 - Other NP Events (eg. flooding, precipitation)		
6.1 Confinement ventilation system should withstand other NP events considered credible in the DSA where the confinement ventilation system is credited.	If the active confinement ventilation system is not credited for this event there is no need to evaluate that performance and/or design attribute for the confinement ventilation system (discretionary). Also, any impact on the confinement ventilation system performance will be based on the current NP analysis in the DSA.	DOE O 420.1B DOE-HDBK-1169 (9.2)
	As discussed in Table 4-3 transmittal letter SRNL-ROE-2007-00063, Attachment 4, Table 1, this evaluation criteria is NOT APPLICABLE. Per 2004-2 Ventilation System Evaluation Guidance Addendum, March 6, 2007, Caution 4 and Ventilation System Evaluation Guidance for Safety-Related and Non-Safety Related Systems, Revision 0, January 2006, Page 23 Discussion, the evaluation of other NPH events is only required if the accident analysis takes credit for the active confinement ventilation system during or after the NPH event.	

Evaluation Criteria	Discussion	Reference
7 - Range Fires / Dust Storms		
7.1 Administrative controls should be established to protect confinement ventilation systems from barrier threatening events.	Ensure appropriately thought out response to external threat is defined (e.g. pre-fire plan).	DOE O 420.1B
	The Savannah River Forestry Department is responsible for fire fighting efforts in regards to wildland fires. They also have a program of controlled burns and mechanical thinning of underbrush to limit or prevent wildland fires spreading out of control. If the fire encroaches upon SRNL, the Savannah River Site Fire Department will direct extinguishing efforts. Building 773-A has a current Fire Pre Plan and has procedures to reduce confinement ventilation system air flow (originally develop for electrical system maintenance) that will minimize soot loading of the filters in the ventilation systems. Reference: AOP-06-007 Dust storms are not an issue at the Savannah River Site due to the regional climate. <u>Gap Analysis</u> No Gap. Administrative controls are sufficient to protect the confinement ventilation systems for barrier threatening events.	

Evaluation Criteria	Discussion	Reference
8 - Testability		
8.1 Design supports the periodic inspection and testing of filters and housing, and test and inspections are conducted periodically.	Ability to test for leakage per intent of N510.	DOE-HDBK-1169 (2.3.8) ASME AG-1 ASME N510
	All E-LHEX HEPA filter housings have the capability for in-place testing. This in-place test capability was added in the 1960's and testing points meet the intent of N510. Aerosol efficiency testing is performed on all E-LHEX HEPA filters every 18 months. The E-LHEX uses 1950's style "tape-in-place" configured HEPA filter mounting assemblies in lieu of enclosed filter housings. Tape forms a part of the confinement barrier and the wooden filter case is exposed to local hazards including fire . This style housing is highly dependent upon the skill of the worker to properly install and seal the HEPA filter. <u>Gap Analysis</u> Gap Number 36: Discretionary Gap - Tape-in-place HEPA filters do not meet the filter housing pressure boundary integrity testing requirements in N510.	
8.2 Instrumentation required to support system operability is calibrated.	Credited instrumentation should have specified calibration / surveillance requirements. Non-safety instrumentation should be calibrated as necessary to support system functionality.	DOE-HDBK-1169 (2.3.8)
	The E-LHEX system functional classification is General Service, it is not credited in the DSA to perform a safety function. Therefore there is no credited instrumentation on any of the E-LHEX sub-systems. E-LHEX system non-safety instrumentation is calibrated only on an as-needed basis, there is no established calibration frequency. <u>Gap Analysis</u> No Gap.	

Evaluation Criteria	Discussion	Reference
8.3 Integrated system performance testing is specified and performed.	Required responses assumed in the accident analysis must be periodically confirmed including any time constraints.	DOE-HDBK-1169 (2.3.8)
	The E-LHEX system functional classification is General Service, it is not credited in the DSA to perform a safety function. Airflow direction and differential pressures are verified at key points within the building during periodic air balance testing to verify that the ventilation systems are functioning as intended. Findings are forwarded to the Design Authority Engineer. Results are documented in an Air Balance Test Report, and evaluated for any necessary corrective actions. The last full air balance test for Section E was performed in 2001. Air flow directions between rooms are also verified to support radiological surveys on a routine basis with findings forwarded to the Design Authority Engineer. <u>Gap Analysis</u> No Gap	

Evaluation Criteria	Discussion	Reference
9 - Maintenance		
9.1 Filter service life program should be established.	Filter life (shelf life, service life, total life) expectancy should be determined. Consider: filter environment, maximum delta-P, radiological loading, age, and potential chemical exposure.	DOE-HDBK-1169 (3.1 & App C)
	Per requirements of SRS Engineering Standard 15888, a Filter service life program has been established for this system. This standard is the basis of the Nuclear Air Cleaning Handbook Appendix C. The filters have a maximum shelf life of 3 years and total life of 10 years. Program is tracked using the Computerized Maintenance Management System . <u>Gap Analysis</u> No Gap.	

Evaluation Criteria	Discussion	Reference
10 - Single Failure		
10.1 Failure of one component (equipment or control) shall not affect continuous operation.	Address potential failures (example failures - fan, backup power supply, switchgear).	DOE O 420.1B (Facility Safety, Chapter I, Sec. 3.b(8))
	E-LHEX High Bay Exhaust Sub-system Normal operation is one fan running with the other in standby. If the normally running fan fails, the standby fan may be started manually. Both fans are supplied with normal power only. E-LHEX Hood Exhaust Sub-system No standby fan is provided. The system fan is supplied with normal power only. Gap Analysis Gap Number 37: Discretionary Gap - The Hood Exhaust sub-system does not have redundant fans.	
10.2 Automatic backup electrical power shall be provided to all critical instruments and equipment required to operate and monitor the confinement ventilation system.	[DOE Guidance Document does not provide any specific evaluation guidance discussion for this criteria]	DOE-HDBK-1169 (2.2.7)
	E-LHEX High Bay Exhaust Sub-system Both fans are supplied with normal power only. E-LHEX Hood Exhaust Sub-system The system fan is supplied with normal power only. HVAC supply units for areas served by the High Bay Exhaust and Hood Exhaust sub-systems are not supplied with backup electrical power. Gap Analysis Gap Number 38: Discretionary Gap - Automatic backup electrical power is not provided for the following E-LHEX sub-systems: High Bay Exhaust and Hood Exhaust.	

Evaluation Criteria	Discussion	Reference
10.3 Backup electrical power shall be provided to all critical instruments and equipment required to operate and monitor the confinement ventilation system.	NOTE: Safety Class is addressed through previous line.	DOE-HDBK-1169 (2.2.7)
	This evaluation criteria is NOT APPLICABLE, as it is an SS-only criteria. SRNL confinement ventilation systems are evaluated to SC criteria.	

Evaluation Criteria	Discussion	Reference
11 - Other Credited Functional Requirements		
11.1 Address any specific functional requirements for the confinement ventilation system (beyond the scope of those above) credited in the DSA.	[DOE Guidance Document does not provide any specific evaluation guidance discussion for this criteria]	10 CFR 830, Subpart B
	The E-LHEX system functional classification is General Service, it is not credited in the DSA to perform a safety function. There are no functional requirements for the system credited in the DSA. <u>Gap Analysis</u> No Gap.	

Evaluation Criteria	Discussion	Reference
0 - Ventilation System Description & References		
0.1 System Description	N/A	N/A
	<u>System Description</u> The Section E Heating and Ventilating (E-HV) System consists of two independent low volume sub-systems that exhaust two rooms in the Section E tertiary confinement zone. Both E-HV sub-systems discharge to atmosphere above the Section E roof. Reference Attachment 11 Figure A for a system single line. <u>E-HV Men's Change Room Exhaust Sub-system</u> One E-HV Fan exhausts the Men's Change Room (Room E-035) using single-stage HEPA filtration. The fan is supplied with normal power only, and there is no standby fan. There is no system instrumentation or alarms. <u>E-HV Women's Change Room Exhaust Sub-system</u> One E-HV Fan exhausts the Women's Change Room (Room E-027) using no filtration. The fan is supplied with normal power only, and there is no standby fan. There is no system instrumentation or alarms. The building shell, walls and roof associated with the HV systems are qualified to PC-1.	

Evaluation Criteria	Discussion	Reference
0.2 System References	N/A	N/A
	System Design Descriptions o M-SYD-A-00022, 773-A Section E, HVAC Supply and Miscellaneous Exhaust Drawings o M-M5-A-0206, Section E Exhaust Systems Air Balance Riser Diagram o W144392, Basic Design Manual Section E H&V Flow Diagram o P-PH-A-0076, High Level Caves Supply and Exhaust Systems Air Flow and Balance o W157496, Heating and Ventilating, Section E High Level Caves Main Floor Plan o M-M5-A-0116, Section E Partial Roof and Service Floor Plans o M-M5-A-0120, Section E Partial Main Floor, Service Floor and Roof Plans, HV & HVAC System Test Procedures o TP-02-773A-EWING-01, Section E Air Balance Test Procedure o 5Q1.2, Procedure 484, Building Air Survey o TO-05-027, 773-A D/G Annual Design Load Test Round Sheets and Other Procedures o ROD-OPS-2002-002 - Control Area Operator (CAO) Round Sheets o ROD-OPS-2002-003 - Facility Operator (FO) Round Sheets o AOP-06-007, Wildland Fire, Facility Ventilation Shutdown and/or Evacuation Standards o DuPont Engineering Specifications 3027, 3017, 5998, 7591, 8728, H16J, SH1A. o SRS Procurement Specification M-SPP-G-00243, HEPA Filter Specification o SRS Engineering Standard 15888, HEPA Filter Requirements o DOE-STD-3020-2005, DOE Technical Standard - Specification for HEPA Filters Used by DOE Contractors o DOE-STD-3025-2007, DOE Technical Standard - Quality Assurance Inspection and Testing of HEPA Filters o UL 586, UL Standard for Safety, High Efficiency, Particulate, Air Filter Units, 1996 o ANSI/ASME NQA-1, Quality Assurance Program Requirements for Nuclear Facilities Miscellaneous o Ventilation System Evaluation Guidance for Safety-Related and Non-Safety Related Systems, January 2006 o 2004-2 Ventilation System Evaluation Guidance Addendum, March 2007 o SRNL-ROE-2007-00063, SRNL Table 4-3 Submittal to DOE-SR, April 2007 o WSRC-SA-2, SRNL Technical Area (TA) Documented Safety Analysis (DSA), Revision 3 o WSRC-TS-97-00014, SRNL Technical Area (TA) Technical Safety Requirements (TSRs), Revision 4 o SRNL-ESD-2007-00017, Structural Integrity Program Scope, Resources & Estimate, February 2007	

Evaluation Criteria	Discussion	Reference
1 - Ventilation System – General Criteria		
1.1 Pressure differential should be maintained between zones and atmosphere.	Number of zones as credited by accident analysis to control hazardous material release; demonstrate by use considering potential in-leakage.	DOE-HDBK-1169 (2.2.9) ASHRAE Design Guide
	Confinement Zones o Primary Confinement Shielded Cells / Gloveboxes / Ducting through 1st testable HEPA filter stage o Secondary Confinement Cell Operating & Service Areas / Cell roof / HEPA filter room / Fan Room o Tertiary Confinement Corridors / Offices / General Service Floor Area See Table 5-1 for the Cell Exhaust System for a discussion of the Section E primary confinement zones. The E-HV exhaust systems serve tertiary confinement zones only. Secondary confinement zones consist of the cell large equipment loading area (high bay), cell small equipment loading areas, manipulator glovebox room, offices, change/restrooms and cell operating areas. These areas have a limited quantity of direct supply air; the major portion is drawn from the tertiary confinement zone. These areas have a number of direct exhaust systems for locations with a higher contamination potential. Tertiary confinement zones consist of office, storage, maintenance and support spaces surrounding the secondary confinement zone. The spaces have a mixture of recirculating HVAC systems, 100% outside air HVAC systems and unfiltered exhaust systems. Differential pressures between zones are not measured directly, but instead are maintained by periodic monitoring of air flow, and by periodic performance of air flow balance tests. Air flow direction checks are performed quarterly per Manual 5Q1.2 - 484. Air balance tests are performed periodically to ensure proper air flows and room differential pressures. The last such test for Section E was performed in 2001. <u>Gap Analysis</u> No Gap	
1.2 Materials of construction should be appropriate for normal, abnormal and accident conditions.	[DOE Guidance Document does not provide any specific evaluation guidance discussion for this criteria]	DOE-HDBK-1169 (2.2.5) ASME AG-1
	All ductwork is either 16 or 22 gauge galvanized carbon steel. Where flanged joints are used, they are sealed with neoprene gaskets. All fans are carbon steel with protective coating, with flexible connections at the fan inlet and outlet. <u>Gap Analysis</u> No Gap. Materials of construction are appropriate for normal, abnormal and accident conditions.	

Evaluation Criteria	Discussion	Reference
1.3 Exhaust system should withstand anticipated normal, abnormal and accident system conditions and maintain confinement integrity.	As required by accident analysis to prevent accident release.	DOE-HDBK-1169 (2.4) ASHRAE Design Guide
	The E-HV system functional classification is General Service; it is not credited in the DSA to perform a safety function. None of the events (accidents) evaluated by this report are applicable to the men's & women's change rooms. Airborne contamination from spills and low energy explosions could reach these systems. A gap has been identified in Evaluation Criteria 1.4 <u>Gap Analysis</u> No Gap - See Evaluation Criteria 1.4 for Discretionary Gap.	
1.4 Confinement ventilation systems shall have appropriate filtration to minimize release.	Address: 1) Type of filter (e.g., HEPA, sand, sintered metal); 2) Filter sizing (flow capacity and pressure drop); 3) Decontamination Factor vs. accident analysis assumptions.	ASME AG-1 DOE-HDBK-1169 (2.2.1)
	The E-HV Men's Change Room Exhaust sub-system utilizes single stage HEPA filtration in an arrangement such that the HEPA filter design flow and pressure drop do not exceed the normal rated capacity as established in ASME AG-1, Section FC (square filters). Nuclear Grade HEPA filters are procured to SRS Specification M-SPP-G-00243 which incorporates the requirements of ASME AG-1. In-place testing is performed to ensure a filter housing efficiency of at least 99.95%. Prior to receipt the filters are tested at the Independent Filter Testing Facility (FTF) to confirm an efficiency of at least 99.97% for a decontamination factor DF = 3333. Decontamination factor has not been considered in the facility DSA. The E-HV Women's Change Room Exhaust sub-system is not filtered. <u>Gap Analysis</u> Gap Number 28: Discretionary Gap - The Women's Change Room Exhaust sub-system exhaust does not have HEPA filtration before being released to the environment.	

Evaluation Criteria	Discussion	Reference
2 - Ventilation System – Instrumentation & Control		
2.1 Provide system status instrumentation and/or alarms.	Address key information to ensure system operability (e.g., system delta-P, filter pressure drop).	ASME AG-1 DOE-HDBK-1169 ASHRAE Design Guide (Section 4)
	<u>E-HV Men's Change Room Exhaust Sub-system</u> Local instrumentation - None. Remote instrumentation - None. Alarms - None. <u>E-HV Women's Change Room Exhaust Sub-system</u> Local instrumentation - None. Remote instrumentation - None. Alarms - None <u>Gap Analysis</u> Gap Number 29: Discretionary Gap - The two sub-systems do not have any local or remote system status instrumentation or alarms.	
2.2 Interlock supply and exhaust fans to prevent positive pressure differential.	[DOE Guidance Document does not provide any specific evaluation guidance discussion for this criteria]	DOE-HDBK-1169 ASHRAE Design Guide (Section 4)
	Section E supply and exhaust fans are not interlocked. If one of the HV systems were to shut down, a tertiary confiement zone to atmosphere would not occur due to small capacity (~ 500 CFM) compared to the total cascaded airflow from tertiary to secondary confinement zone. <u>Gap Analysis</u> No Gap	
2.3 Post accident indication of filter break-through.	Instrumentation supports post accident planning and response; should be considered critical instrumentation for SC.	TECH-34
	The E-HV system functional classification is General Services, it is not credited in the DSA to perform a safety function. The E-HV Men's Change Room Exhaust sub-system, after HEPA filtration, discharges directly to the atmosphere at roof top level. The E-HV Women's Change Room Exhaust sub-system, which is not filtered, discharges directly to the atmosphere at roof top level. <u>Gap Analysis</u> Gap Number 30: Discretionary Gap - Emission points from tertiary confinement zone do not have post accident indication of filter break through.	

Evaluation Criteria	Discussion	Reference
2.4 Reliability of control system to maintain confinement function under normal, abnormal and accident conditions.	Address, for example, impacts of potential common mode failures from events that would require active confinement function.	DOE-HDBK-1169 (2.4)
	The E-HV system functional classification is General Service, it is not credited in the DSA to perform a safety function. The events to be evaluated for Section E are (1) a drop/spill inside a Section E shielded cell, and (2) a low-energy process explosion inside a Section E shielded cell or laboratory, caused by an unstable lab chemical, process flammable gas or VOCs. Since neither of the E-HV sub-systems serves these particular areas, the E-HV system would not be affected by a low-energy process explosion inside a laboratory, since the DSA assumes the explosion would not challenge the integrity of the lab module. Therefore there is no potential common mode failure caused by this event. The E-HV sub-systems would continue to function normally. <u>Gap Analysis</u> No Gap.	
2.5 Control components should fail safe.	[DOE Guidance Document does not provide any specific evaluation guidance discussion for this criteria]	DOE-HDBK-1169 (2.4)
	Neither of the E-HV sub-systems have any automatic control components. If any control components are added to correct other gaps, they will be fail safe. <u>Gap Analysis</u> No Gap.	

Evaluation Criteria	Discussion	Reference
3 - Resistance to Internal Events – Fire		
3.1 Confinement ventilation systems should withstand credible fire events and be available to operate and maintain confinement.	Required for new facilities; as required by the accident analysis for existing facilities (discretionary). Must address protection of filter media.	DOE-HDBK-1169 (10.1) DOE-STD-1066
	As discussed in Table 4-3 transmittal letter SRNL-ROE-2007-00063, Attachment 4, Table 1, this evaluation criteria is NOT APPLICABLE. Per Ventilation System Evaluation Guidance for Safety-Related and Non-Safety Related Systems, Revision 0, January 2006, Page 21 and 22 Discussion, the evaluation of internal fire events for an existing facility is only required if the accident analysis takes credit for the active confinement ventilation system.	
3.2 Confinement ventilation systems should not propagate spread of fire.	Required for new facilities; as required by the accident analysis for existing facilities (discretionary). Address fire barriers, fire dampers arrangement.	DOE-HDBK-1169 (10.1) DOE-STD-1066
	As discussed in Table 4-3 transmittal letter SRNL-ROE-2007-00063, Attachment 4, Table 1, this evaluation criteria is NOT APPLICABLE. Per Ventilation System Evaluation Guidance for Safety-Related and Non-Safety Related Systems, Revision 0, January 2006, Page 21 and 22 Discussion, the evaluation of internal fire events for an existing facility is only required if the accident analysis takes credit for the active confinement ventilation system.	

Evaluation Criteria	Discussion	Reference
4 - Resistance to External Events – Natural Phenomena – Seismic		
4.1 Confinement ventilation systems should safely withstand earthquakes.	If the active CVS system is not credited in a seismic accident condition there is no need to evaluate that performance and/or design attribute for the confinement ventilation system (discretionary). Also, any seismic impact on the confinement ventilation system performance will be based on the current functional requirements in the DSA. NOTE: Seismic requirements may apply to Defense-in-Depth items indirectly for the protection of safety SSCs.	ASME AG-1 (AA) DOE O 420.1B DOE-HDBK-1169 (9.2)
	As discussed in Table 4-3 transmittal letter SRNL-ROE-2007-00063, Attachment 4, Table 1, this evaluation criteria is NOT APPLICABLE. Per 2004-2 Ventilation System Evaluation Guidance Addendum, March 6, 2007, Caution 4 and Ventilation System Evaluation Guidance for Safety-Related and Non-Safety Related Systems, Revision 0, January 2006, Page 22 Discussion, the evaluation of seismic events is only required if the accident analysis takes credit for the active confinement ventilation system during or after the NPH event.	

Evaluation Criteria	Discussion	Reference
5 - Resistance to External Events – Natural Phenomena – Tornado/Wind		
5.1 Confinement ventilation systems should safely withstand tornado depressurization.	If the active CVS is not credited in a tornado condition there is no need to evaluate that performance and/or design attribute for the confinement ventilation system (discretionary). Also, any tornado impact on the confinement ventilation system performance will be based on the current functional requirements in the DSA.	DOE O 420.1B DOE-HDBK-1169 (9.2)
	As discussed in Table 4-3 transmittal letter SRNL-ROE-2007-00063, Attachment 4, Table 1, this evaluation criteria is NOT APPLICABLE. Per 2004-2 Ventilation System Evaluation Guidance Addendum, March 6, 2007, Caution 4 and Ventilation System Evaluation Guidance for Safety-Related and Non-Safety Related Systems, Revision 0, January 2006, Pages 22 and 23 Discussion, the evaluation of tornado and wind events is only required if the accident analysis takes credit for the active confinement ventilation system during or after the NPH event.	
5.2 Confinement ventilation systems should withstand design wind effects on system performance.	If the active CVS is not credited in a wind condition there is no need to evaluate that performance and/or design attribute for the confinement ventilation system (discretionary). Also, any wind impact on the confinement ventilation system performance will be based on the current NP analysis in the DSA.	DOE O 420.1B DOE-HDBK-1169 (9.2)
	As discussed in Table 4-3 transmittal letter SRNL-ROE-2007-00063, Attachment 4, Table 1, this evaluation criteria is NOT APPLICABLE. Per 2004-2 Ventilation System Evaluation Guidance Addendum, March 6, 2007, Caution 4 and Ventilation System Evaluation Guidance for Safety-Related and Non-Safety Related Systems, Revision 0, January 2006, Pages 22 and 23 Discussion, the evaluation of tornado and wind events is only required if the accident analysis takes credit for the active confinement ventilation system during or after the NPH event.	

Evaluation Criteria	Discussion	Reference
6 - Other NP Events (eg. flooding, precipitation)		
6.1 Confinement ventilation system should withstand other NP events considered credible in the DSA where the confinement ventilation system is credited.	If the active confinement ventilation system is not credited for this event there is no need to evaluate that performance and/or design attribute for the confinement ventilation system (discretionary). Also, any impact on the confinement ventilation system performance will be based on the current NP analysis in the DSA.	DOE O 420.1B DOE-HDBK-1169 (9.2)
	As discussed in Table 4-3 transmittal letter SRNL-ROE-2007-00063, Attachment 4, Table 1, this evaluation criteria is NOT APPLICABLE. Per 2004-2 Ventilation System Evaluation Guidance Addendum, March 6, 2007, Caution 4 and Ventilation System Evaluation Guidance for Safety-Related and Non-Safety Related Systems, Revision 0, January 2006, Page 23 Discussion, the evaluation of other NPH events is only required if the accident analysis takes credit for the active confinement ventilation system during or after the NPH event.	

Evaluation Criteria	Discussion	Reference
7 - Range Fires / Dust Storms		
7.1 Administrative controls should be established to protect confinement ventilation systems from barrier threatening events.	Ensure appropriately thought out response to external threat is defined (e.g. pre-fire plan).	DOE O 420.1B
	The Savannah River Forestry Department is responsible for fire fighting efforts in regards to wildland fires. They also have a program of controlled burns and mechanical thinning of underbrush to limit or prevent wildland fires spreading out of control. If the fire encroaches upon SRNL, the Savannah River Site Fire Department will direct extinguishing efforts. Building 773-A has a current Fire Pre Plan and has procedures to reduce confinement ventilation system air flow (originally develop for electrical system maintenance) that will minimize soot loading of the filters in the ventilation systems. Reference: AOP-06-007 Dust storms are not an issue at the Savannah River Site due to the regional climate. <u>Gap Analysis</u> No Gap. Administrative controls are sufficient to protect the confinement ventilation systems for barrier threatening events.	

Evaluation Criteria	Discussion	Reference
8 - Testability		
8.1 Design supports the periodic inspection and testing of filters and housing, and test and inspections are conducted periodically.	Ability to test for leakage per intent of N510.	DOE-HDBK-1169 (2.3.8) ASME AG-1 ASME N510
	Aerosol efficiency testing is performed on the E-HV Men's Change Room Exhaust sub-system HEPA filter every 18 months. This in-place test capability was added in the 1960's and testing points meet the intent of N510. <u>Note</u> - The E-HV Women's Change Room Exhaust sub-system is unfiltered. <u>Gap Analysis</u> No Gap.	
8.2 Instrumentation required to support system operability is calibrated.	Credited instrumentation should have specified calibration / surveillance requirements. Non-safety instrumentation should be calibrated as necessary to support system functionality.	DOE-HDBK-1169 (2.3.8)
	The E-HV system functional classification is General Service; it is not credited in the DSA to perform a safety function. The E-HV system has no installed instrumentation. If non-safety instrumentation is added to close other gaps, it will be calibrated as needed. <u>Gap Analysis</u> No Gap.	
8.3 Integrated system performance testing is specified and performed.	Required responses assumed in the accident analysis must be periodically confirmed including any time constraints.	DOE-HDBK-1169 (2.3.8)
	The E-HV system functional classification is General Service, it is not credited in the DSA to perform a safety function. No formal integrated system performance testing is required. Airflow direction and differential pressures are verified at key points within the building during periodic air balance testing to verify that the ventilation systems are functioning as intended. Findings are forwarded to the Design Authority Engineer. Results are documented in an Air Balance Test Report, and evaluated for any necessary corrective actions. The last full air balance test for Section E was performed in 2001. Air flow directions between rooms are also verified to support radiological surveys on a routine basis with findings forwarded to the Design Authority Engineer. <u>Gap Analysis</u> No Gap	

Evaluation Criteria	Discussion	Reference
9 - Maintenance		
9.1 Filter service life program should be established.	Filter life (shelf life, service life, total life) expectancy should be determined. Consider: filter environment, maximum delta-P, radiological loading, age, and potential chemical exposure.	DOE-HDBK-1169 (3.1 & App C)
	Per requirements of SRS Engineering Standard 15888, a Filter service life program has been established for this system. This standard is the basis of the Nuclear Air Cleaning Handbook Appendix C. The filters have a maximum shelf life of 3 years and total life of 10 years. Program is tracked using the Computerized Maintenance Management System . Note - The E-HV Women's Change Room Exhaust sub-system is unfiltered. Gap Analysis No Gap.	

Evaluation Criteria	Discussion	Reference
10 - Single Failure		
10.1 Failure of one component (equipment or control) shall not affect continuous operation.	Address potential failures (example failures - fan, backup power supply, switchgear).	DOE O 420.1B (Facility Safety, Chapter I, Sec. 3.b(8))
	E-HV Men's Change Room Exhaust Sub-system No standby fan is provided. The system fan is supplied with normal power only. E-HV Women's Change Room Exhaust Sub-system No standby fan is provided. The system fan is supplied with normal power only. Gap Analysis Gap Number 31: Discretionary Gap - The two sub-systems do not have redundant fans.	
10.2 Automatic backup electrical power shall be provided to all critical instruments and equipment required to operate and monitor the confinement ventilation system.	[DOE Guidance Document does not provide any specific evaluation guidance discussion for this criteria]	DOE-HDBK-1169 (2.2.7)
	E-HV Men's Change Room Exhaust Sub-system The system fan is supplied with normal power only. E-HV Women's Change Room Exhaust Sub-system The system fan is supplied with normal power only. Gap Analysis Gap Number 32: Discretionary Gap - The two sub-systems fans do not have automatic back-up power.	
10.3 Backup electrical power shall be provided to all critical instruments and equipment required to operate and monitor the confinement ventilation system.	NOTE: Safety Class is addressed through previous line.	DOE-HDBK-1169 (2.2.7)
	This evaluation criteria is NOT APPLICABLE, as it is an SS-only criteria. SRNL confinement ventilation systems are evaluated to SC criteria.	

Evaluation Criteria	Discussion	Reference
11 - Other Credited Functional Requirements		
11.1 Address any specific functional requirements for the confinement ventilation system (beyond the scope of those above) credited in the DSA.	[DOE Guidance Document does not provide any specific evaluation guidance discussion for this criteria]	10 CFR 830, Subpart B
	The E-HV system functional classification is General Service, it is not credited in the DSA to perform a safety function. There are no functional requirements for the system credited in the DSA. <u>Gap Analysis</u> No Gap.	

Evaluation Criteria	Discussion	Reference
0 - Ventilation System Description & References		
0.1 System Description	N/A	N/A
	System Description The Section F Process Hood Exhaust (F-PHEX) system is a manifolded exhaust system that exhausts both the primary and secondary confinement zones in 773-A Section F. Exhaust air is drawn from the service galleries and support areas on the main floor and the operating areas on the service floor, into the high bay experimental area (center portion of F Section) or lab modules on the main floor. Three large exhaust fans, located on the east roof of F Section, provide up to 40,000 cfm exhaust (normally provided by two of the three installed fans). See Attachment 11 Figure B for a schematic of the system). Fourteen (14) connections points are provided to the exhaust fan inlet plenum. These connection points serve either room risers that exhaust the secondary confinement zone or primary confinement zones such as Shielded Cells (Medical Source Facility and Californium Process Facility), Fume Hoods (F-003, SED or REALS), Gloveboxes (AD&D and SED) or special process enclosures (CPF and AD&D). All exhaust air is routed through HEPA filters and discharged to the Area Sand Filter and 791-A stack. The building shell, walls and roof associated with the PHEX system are qualified to PC-1.	

Evaluation Criteria	Discussion	Reference
0.2 System References	N/A	N/A
	System Design Descriptions o M-SYD-A-00023, F-Section Supply and Exhaust Systems, 773-A, System Design Description o T-CLC-A-00011, F Wing Fragility Analysis, T-CLC-A-00011 o M-SYD-A-00024, IA, PLTA & Compressor Alternate CW o E-SYD-A-00008, 773-A D/G Standby Power System o G-SYD-A-00002, SRNL Sand Filter System Design Description Test Procedures o TO-06-017, Rotation of Section F Exhaust System Fans o TO-06-038, Testing of Interlocks between Section F Exhaust Fan System and Diversion Fans o TP-02-773A-FWING-02, 773-A, F Wing Air Balance Report o 5Q1.2, Procedure 484, Building Air Survey o TO-05-027, 773-A D/G Annual Design Load Test Round Sheets and Other Procedures o ROD-OPS-2002-002 - Control Area Operator (CAO) Round Sheets o ROD-OPS-2002-003 - Facility Operator (FO) Round Sheets o AOP-06-007, Wildland Fire, Facility Ventilation Shutdown and/or Evacuation o AOP-06-005, 773-A Section F Reduced Ventilation and/or Loss of Alarms Standards o DuPont Engineering Specifications 3027, 3017, 5998, 7591, 8728, H16J, SH1A. o SRS Procurement Specification M-SPP-G-00243, HEPA Filter Specification o SRS Engineering Standard 15888, HEPA Filter Requirements o DOE-STD-3020-2005, DOE Technical Standard - Specification for HEPA Filters Used by DOE Contractors o DOE-STD-3025-2007, DOE Technical Standard - Quality Assurance Inspection and Testing of HEPA Filters o UL 586, UL Standard for Safety, High Efficiency, Particulate, Air Filter Units, 1996 o ANSI/ASME NQA-1, Quality Assurance Program Requirements for Nuclear Facilities Miscellaneous o Ventilation System Evaluation Guidance for Safety-Related and Non-Safety Related Systems, January 2006 o 2004-2 Ventilation System Evaluation Guidance Addendum, March 2007 o SRNL-ROE-2007-00063, SRNL Table 4-3 Submittal to DOE-SR, April 2007 o WSRC-SA-2, SRNL Technical Area (TA) Documented Safety Analysis (DSA), Revision 3 o WSRC-TS-97-00014, SRNL Technical Area (TA) Technical Safety Requirements (TSRs), Revision 4 o SRNL-ESD-2007-00017, Structural Integrity Program Scope, Resources & Estimate, February 2007	

Evaluation Criteria	Discussion	Reference
1 - Ventilation System – General Criteria		
1.1 Pressure differential should be maintained between zones and atmosphere.	Number of zones as credited by accident analysis to control hazardous material release; demonstrate by use considering potential in-leakage.	DOE-HDBK-1169 (2.2.9) ASHRAE Design Guide
	The F-Section Process Hood Exhaust system (F-PHEX) exhausts primary confinement enclosures in F-section as follows: The Californium Packaging Facility (CPF) “hot cells”, the Medical Source Facility (MSF) “hot cells”; gloved enclosures including the Alpha Decontamination and Decommissioning enclosure (AD&D), four gloveboxes, and five radiological/chemical hoods. All of these enclosures except three rad/chem hoods are inactive, but all serve to confine contamination from legacy materials. The Section F Process Hood Exhaust System ductwork between the CPF and MSF cells through a testable HEPA filter is credited in the facility Safety Basis for passive confinement only (SS function). The F-PHEX fans maintain sufficient air flow from the cells to establish a primary confinement zone therein. The F-PHEX system gloveboxes contain inventories below Hazard Category 3 thresholds per DOE-STD-1027-92 and thus may be classified as General Service (GS). The gloveboxes are maintained at a vacuum of 0.5 to 1.0 in. wc relative to the surrounding space by the F-PHEX system. The F-PHEX system fans have abundant capacity to induce an inward air flow in the event of an open gloveport or passthrough in order to confine radiological materials. The F-PHEX system is sized to ensure an adequate inflow of air in the event of a credible confinement breach for affected enclosures and cells. <u>Gap Analysis</u> No Gap	
1.2 Materials of construction should be appropriate for normal, abnormal and accident conditions.	[DOE Guidance Document does not provide any specific evaluation guidance discussion for this criteria]	DOE-HDBK-1169 (2.2.5) ASME AG-1
	The F-PHEX system ductwork is fabricated from stainless steel sheet 20 ga. or greater thickness, of welded construction. The material was selected to be resistant to corrosion resulting from chemical fumes and moisture, anticipated from chemical production and research activities. System dampers are also constructed from stainless steel with chemically resistant valve trim. The filter housings are also constructed from grade 304 stainless steel and use neoprene gaskets for chemical resistance. The system fans are constructed from carbon steel with applied protective coatings. The facility has implemented a system integrity inspection program whereby vital system ductwork is checked for wall thickness and corrosion damage. The system was installed ~40 years ago and system physical degradation is not evident. The F-PHEX exhaust ducts from the CPF and MSF cells are credited in the facility safety basis with passive confinement of radiological material up to and including a testable HEPA filter. <u>Gap Analysis</u> No Gap. Materials of construction are appropriate for normal, abnormal and accident conditions.	

Evaluation Criteria	Discussion	Reference
1.3 Exhaust system should withstand anticipated normal, abnormal and accident system conditions and maintain confinement integrity.	As required by accident analysis to prevent accident release.	DOE-HDBK-1169 (2.4) ASHRAE Design Guide
	The F-PHEX system facilitates the confinement feature of various F-section enclosures. (See evaluation 1.1-GC1 above) An accident event to be evaluated is an explosion from glovebox overpressurization. There are four gloveboxes exhausted by the F-PHEX system through two stages of HEPA filtration. The filter housings are not co-located with the gloveboxes, so a glovebox accident would not directly affect the HEPA filter availability. If the accident resulted in a minor breach of the confinement boundary, the exhaust system would effectively purge the glovebox through the HEPA filter in normal fashion. If an explosion breached a glovebox dispersing the radioactive inventory into the room, the local room exhaust inlet is provided with a testable HEPA filter to control release of contamination. The local room exhaust flows to the area sandfilter before discharge to the environment providing defense-in-depth protection. Process flammable gas generated in an individual glovebox would be diluted many times below the lower flammable limit prior to entering the filter housing. Thus an explosion involving the F-PHEX filter housing is not credible. The HEPA filter housings are a totally enclosed design. They have inherent resistance to the effects of external events. The system is not credited in the DSA with surviving an NPH (earthquake) event . <u>Gap Analysis</u> No Gap.	

Evaluation Criteria	Discussion	Reference
1.4 Confinement ventilation systems shall have appropriate filtration to minimize release.	Address: 1) Type of filter (e.g., HEPA, sand, sintered metal); 2) Filter sizing (flow capacity and pressure drop); 3) Decontamination Factor vs. accident analysis assumptions.	ASME AG-1 DOE-HDBK-1169 (2.2.1)
	Nuclear Grade HEPA filters are procured to SRS Specification M-SPP-G-00243 which incorporates the requirements of ASME AG-1. All F-PHEX system enclosures are exhausted through HEPA filters which are periodically leak tested in place to ensure a filtration efficiency of 99.95%. This efficiency was qualitatively selected to ensure that the HEPA filter is properly installed to support the passive confinement function. Prior to receipt the filters are tested at the Independent Filter Testing Facility (FTF) to confirm an efficiency of at least 99.97% for a decontamination factor DF = 3333. Decontamination factor has not been considered in the facility DSA. The HEPA filters serving the F-Section shielded cells Californium Packaging Facility and Medical Source Facility (CPF and MSF) are installed in totally enclosed stainless steel housings. CPF exhausts through two testable stages, MSF has one testable filtration stage. The CPF exhaust design flow is 1025 CFM. The nominal maximum capacity of the exhaust HEPA filter is 1000 CFM. The normal exhaust flow, as measured by the most recent air balance procedure, is approximately 825 CFM. The MSF exhaust design flow is 400 CFM. The system has two parallel HEPA filters, each with a capacity of 250 CFM. F-section radiohoods and chemical hoods exhaust through testable HEPA filters: The Radiological Evidence Analysis Laboratory Suites (REALS) has two hoods with a combined exhaust of 1900 (CFM design). The associated HEPA filter housing has two parallel 1500 CFM filters installed for a total capacity of 3000 CFM. The F-003 lab in has two hoods with a combined measured exhaust of 1505 CFM. This exhaust passes through two stages of HEPA filters, the first with a single 1000 CFM capacity HEPA filter and the second with two parallel 1250 CFM capacity filters (2500 cfm capacity). Since the air is properly filtered by the second stage of HEPA filtration and then by the sand filter before it reaches the environment. The over flowing of the first stage of HEPA filtration is not considered a gap. <u>Gap Analysis</u> No gaps.	

Evaluation Criteria	Discussion	Reference
2 - Ventilation System – Instrumentation & Control		
2.1 Provide system status instrumentation and/or alarms.	Address key information to ensure system operability (e.g., system delta-P, filter pressure drop).	ASME AG-1 DOE-HDBK-1169 ASHRAE Design Guide (Section 4)
	Differential pressure gauges are installed to measure room to GB DP for F-PHEX system gloveboxes. Twelve of the fourteen main exhaust branches have automatic control dampers which adjust the branch static pressure to compensate for the gradual loading of the branch HEPA filters. The F-PHEX exhaust fans static pressure is monitored at the fans control panel and low static pressure condition alarms in the main control room. Exhaust air temperature indication is not required. The system handles ambient, conditioned air exhausted from the F-section high bay and laboratory rooms. Differential pressure between primary confinement (CPF & MSF cells) is not credited in the facility safety basis. However, DOE-HNBK-1169-2003, Table 2.6 lists air flow criteria for hot cells: “A vacuum equal to or greater than 1 in.wc relative to surrounding spaces must be maintained at all times to ensure a positive flow of air into the confinement “. Currently cell differential pressure is not monitored. Glovebox outlet HEPA filter DP instrumentation is not installed on the four F-PHEX system gloveboxes. Two HEPA filtration flow paths (CPF Cells and MSF Cells) have no pressure instrumentation to measure HEPA filter housing differential pressure. <u>Gap Analysis</u> Gap Number 50: Discretionary Gap - For CPF and MSF, Cell Differential Pressure is not monitored. Gap Number 51: Discretionary Gap - For four gloveboxes, outlet HEPA filters are not provided with ΔP instrumentation. Gap Number 52: Discretionary Gap - For CPF and MSF, the outlet HEPA filters are not provided with ΔP instrumentation.	

Evaluation Criteria	Discussion	Reference
2.2 Interlock supply and exhaust fans to prevent positive pressure differential.	[DOE Guidance Document does not provide any specific evaluation guidance discussion for this criteria]	DOE-HDBK-1169 ASHRAE Design Guide (Section 4)
	The F-section supply and exhaust fans are interlocked to prevent a positive pressure differential. The F-section supply fans are controlled by the F-PHEX fans such that the lead supply fan will not start unless the exhaust fan plenum static pressure is below - 3 in. wc. The second supply fan will not start unless the exhaust fan inlet plenum static pressure is below -5 in. wc. <u>Gap Analysis</u> No Gap	
2.3 Post accident indication of filter break-through.	Instrumentation supports post accident planning and response; should be considered critical instrumentation for SC.	TECH-34
	The F-PHEX system effluent is monitored by a sampling system located at the sand filter inlet duct after mixing with the exhaust from other process exhaust systems. <u>Gap Analysis</u> No Gaps	
2.4 Reliability of control system to maintain confinement function under normal, abnormal and accident conditions.	Address, for example, impacts of potential common mode failures from events that would require active confinement function.	DOE-HDBK-1169 (2.4)
	Ref. Table 4.3, Attachment 4, the accidents evaluated for F-section are as follows: Spill Process Flammable Gas Explosion (with no consequential fire) Distributed Flammable Gas Explosion (with no consequential fire) Glovebox Overpressurization <evaluated with the OGE system> The unmitigated consequences offsite for a spill <.31 REM>, and a process flammable gas explosion <.31 REM> are do not challenge the evaluation guidelines. The glovebox overpressurization event has been evaluated with the OGE system. The distributed flammable gas explosion event requires no further evaluation because flammable gas is no longer supplied to F-section. Ref. dwg. W162102, note 2. <u>Gap Analysis</u> No Gap.	

Evaluation Criteria	Discussion	Reference
2.5 Control components should fail safe.	[DOE Guidance Document does not provide any specific evaluation guidance discussion for this criteria]	DOE-HDBK-1169 (2.4)
	The three PHEX system fans are aligned as two operating, one in standby to provide redundancy. The fans are operated from the F-PHEX control panel. Each fan has an automatic inlet damper to prevent backflow through the idle fan. An anticipated equipment failure resulting in loss of instrument air to F-section would have a detrimental effect on the air operated inlet dampers for the F-PHEX fans. Under this scenario, the inlet dampers for the operating fans would close or oscillate from the flow effects of the exhaust air. The inlet dampers are not spring loaded to move to a safe position in case of instrument air loss. Process ventilation for the F-section process enclosures would be impaired in this case because the dampers would be free to move from the system flow effects. <u>Gap Analysis</u> Gap Number 53: Discretionary Gap - The exhaust fan inlet dampers do not fail safe.	

Evaluation Criteria	Discussion	Reference
3 - Resistance to Internal Events – Fire		
3.1 Confinement ventilation systems should withstand credible fire events and be available to operate and maintain confinement.	Required for new facilities; as required by the accident analysis for existing facilities (discretionary). Must address protection of filter media.	DOE-HDBK-1169 (10.1) DOE-STD-1066
	As discussed in Table 4-3 transmittal letter SRNL-ROE-2007-00063, Attachment 4, Table 1, this evaluation criteria is NOT APPLICABLE. Per Ventilation System Evaluation Guidance for Safety-Related and Non-Safety Related Systems, Revision 0, January 2006, Page 21 and 22 Discussion, the evaluation of internal fire events for an existing facility is only required if the accident analysis takes credit for the active confinement ventilation system.	
3.2 Confinement ventilation systems should not propagate spread of fire.	Required for new facilities; as required by the accident analysis for existing facilities (discretionary). Address fire barriers, fire dampers arrangement.	DOE-HDBK-1169 (10.1) DOE-STD-1066
	As discussed in Table 4-3 transmittal letter SRNL-ROE-2007-00063, Attachment 4, Table 1, this evaluation criteria is NOT APPLICABLE. Per Ventilation System Evaluation Guidance for Safety-Related and Non-Safety Related Systems, Revision 0, January 2006, Page 21 and 22 Discussion, the evaluation of internal fire events for an existing facility is only required if the accident analysis takes credit for the active confinement ventilation system.	

Evaluation Criteria	Discussion	Reference
4 - Resistance to External Events – Natural Phenomena – Seismic		
4.1 Confinement ventilation systems should safely withstand earthquakes.	If the active CVS system is not credited in a seismic accident condition there is no need to evaluate that performance and/or design attribute for the confinement ventilation system (discretionary). Also, any seismic impact on the confinement ventilation system performance will be based on the current functional requirements in the DSA. NOTE: Seismic requirements may apply to Defense-in-Depth items indirectly for the protection of safety SSCs.	ASME AG-1 (AA) DOE O 420.1B DOE-HDBK-1169 (9.2)
	As discussed in Table 4-3 transmittal letter SRNL-ROE-2007-00063, Attachment 4, Table 1, this evaluation criteria is NOT APPLICABLE. Per 2004-2 Ventilation System Evaluation Guidance Addendum, March 6, 2007, Caution 4 and Ventilation System Evaluation Guidance for Safety-Related and Non-Safety Related Systems, Revision 0, January 2006, Page 22 Discussion, the evaluation of seismic events is only required if the accident analysis takes credit for the active confinement ventilation system during or after the NPH event.	

Evaluation Criteria	Discussion	Reference
5 - Resistance to External Events – Natural Phenomena – Tornado/Wind		
5.1 Confinement ventilation systems should safely withstand tornado depressurization.	If the active CVS is not credited in a tornado condition there is no need to evaluate that performance and/or design attribute for the confinement ventilation system (discretionary). Also, any tornado impact on the confinement ventilation system performance will be based on the current functional requirements in the DSA.	DOE O 420.1B DOE-HDBK-1169 (9.2)
	As discussed in Table 4-3 transmittal letter SRNL-ROE-2007-00063, Attachment 4, Table 1, this evaluation criteria is NOT APPLICABLE. Per 2004-2 Ventilation System Evaluation Guidance Addendum, March 6, 2007, Caution 4 and Ventilation System Evaluation Guidance for Safety-Related and Non-Safety Related Systems, Revision 0, January 2006, Pages 22 and 23 Discussion, the evaluation of tornado and wind events is only required if the accident analysis takes credit for the active confinement ventilation system during or after the NPH event.	
5.2 Confinement ventilation systems should withstand design wind effects on system performance.	If the active CVS is not credited in a wind condition there is no need to evaluate that performance and/or design attribute for the confinement ventilation system (discretionary). Also, any wind impact on the confinement ventilation system performance will be based on the current NP analysis in the DSA.	DOE O 420.1B DOE-HDBK-1169 (9.2)
	As discussed in Table 4-3 transmittal letter SRNL-ROE-2007-00063, Attachment 4, Table 1, this evaluation criteria is NOT APPLICABLE. Per 2004-2 Ventilation System Evaluation Guidance Addendum, March 6, 2007, Caution 4 and Ventilation System Evaluation Guidance for Safety-Related and Non-Safety Related Systems, Revision 0, January 2006, Pages 22 and 23 Discussion, the evaluation of tornado and wind events is only required if the accident analysis takes credit for the active confinement ventilation system during or after the NPH event.	

Evaluation Criteria	Discussion	Reference
6 - Other NP Events (eg. flooding, precipitation)		
6.1 Confinement ventilation system should withstand other NP events considered credible in the DSA where the confinement ventilation system is credited.	If the active confinement ventilation system is not credited for this event there is no need to evaluate that performance and/or design attribute for the confinement ventilation system (discretionary). Also, any impact on the confinement ventilation system performance will be based on the current NP analysis in the DSA.	DOE O 420.1B DOE-HDBK-1169 (9.2)
	As discussed in Table 4-3 transmittal letter SRNL-ROE-2007-00063, Attachment 4, Table 1, this evaluation criteria is NOT APPLICABLE. Per 2004-2 Ventilation System Evaluation Guidance Addendum, March 6, 2007, Caution 4 and Ventilation System Evaluation Guidance for Safety-Related and Non-Safety Related Systems, Revision 0, January 2006, Page 23 Discussion, the evaluation of other NPH events is only required if the accident analysis takes credit for the active confinement ventilation system during or after the NPH event.	

Evaluation Criteria	Discussion	Reference
7 - Range Fires / Dust Storms		
7.1 Administrative controls should be established to protect confinement ventilation systems from barrier threatening events.	Ensure appropriately thought out response to external threat is defined (e.g. pre-fire plan).	DOE O 420.1B
	The Savannah River Forestry Department is responsible for fire fighting efforts in regards to wildland fires. They also have a program of controlled burns and mechanical thinning of underbrush to limit or prevent wildland fires spreading out of control. If the fire encroaches upon SRNL, the Savannah River Site Fire Department will direct extinguishing efforts. Building 773-A has a current Fire Pre Plan and has procedures to reduce confinement ventilation system air flow (originally develop for electrical system maintenance) that will minimize soot loading of the filters in the ventilation systems. Reference: AOP-06-007 Dust storms are not an issue at the Savannah River Site due to the regional climate. <u>Gap Analysis</u> No Gap. Administrative controls are sufficient to protect the confinement ventilation systems for barrier threatening events.	

Evaluation Criteria	Discussion	Reference
8 - Testability		
8.1 Design supports the periodic inspection and testing of filters and housing, and test and inspections are conducted periodically.	Ability to test for leakage per intent of N510.	DOE-HDBK-1169 (2.3.8) ASME AG-1 ASME N510
	The F-PHEX system HEPA filter housings are totally enclosed units, many having bag-in/bag-out feature. The filter housings have all of the features prescribed in ASME N510, Section 10 to facilitate in-place HEPA filter testing, i.e injection ports and sample ports to support HEPA filter aerosol testing. In-place leak testing of HEPA filter installation is performed in accordance with Manual 2Y1 “HEPA Filter Testing Procedures”, Procedure 104 “General Surveillance Testing of HEPA Filters” In-place leak testing is performed at scheduled intervals for installed testable HEPA filter systems to detect deterioration of filters, gaskets or other causes that could result in leaks. The facility has established a TSR surveillance requirement to perform in place aerosol testing of the HEPA filters at 18 month intervals. <u>Gap Analysis</u> Gap Number 54: Discretionary Gap - For MSF the tape-in-place HEPA filters do not meet the filter housing pressure boundary integrity testing requirements in N510.	
8.2 Instrumentation required to support system operability is calibrated.	Credited instrumentation should have specified calibration / surveillance requirements. Non-safety instrumentation should be calibrated as necessary to support system functionality.	DOE-HDBK-1169 (2.3.8)
	None of the F-PHEX system instrumentation is credited in the DSA with preventing or mitigating a design basis accident. Therefore there are no TSR surveillance calibrations implemented. However, some non-safety instrumentation is calibrated regularly to ensure proper operation of the control system (ex., all three F-PHEX flow switches at the fans are calibrated annually; F supply/exhaust interlock pressure switches are on a three-year calibration cycle). Other system non-safety instrumentation is calibrated only on an as-needed basis, there is no established calibration frequency. <u>Gap Analysis</u> No Gap	

Evaluation Criteria	Discussion	Reference
8.3 Integrated system performance testing is specified and performed.	Required responses assumed in the accident analysis must be periodically confirmed including any time constraints.	DOE-HDBK-1169 (2.3.8)
	Functional testing of the interlocks between the F-PHEX fans and the Sandfilter Diversion Fans is performed monthly. Airflow direction and differential pressures are verified at key points within the building during periodic air balance testing to ensure that the ventilation systems are functioning as intended. Results are documented in an Air Balance Test Report, and evaluated for any necessary corrective actions. Airflow directions between rooms are also verified to as part of radiological surveys with findings forwarded to the Design Authority Engineer. <u>Gap Analysis</u> No Gap.	

Evaluation Criteria	Discussion	Reference
9 - Maintenance		
9.1 Filter service life program should be established.	Filter life (shelf life, service life, total life) expectancy should be determined. Consider: filter environment, maximum delta-P, radiological loading, age, and potential chemical exposure.	DOE-HDBK-1169 (3.1 & App C)
	Per requirements of SRS Engineering Standard 15888, a Filter service life program has been established for this system. This standard is the basis of the Nuclear Air Cleaning Handbook Appendix C. The filters have a maximum shelf life of 3 years and total life of 10 years. Program is tracked using the Computerized Maintenance Management System . Filter environment is considered. The F-PHEX filters exhaust the area confinement cells and enclosures. Air drawn into the enclosures is ambient temperature indoor conditioned air with a relative humidity ~ 50%. Therefore moisture accumulation that will adversely affect the filter media is not expected. Although not previously encountered in the F-PHEX system, moisture laden filters are replaced when discovered. <u>Gap Analysis</u> No Gap	

Evaluation Criteria	Discussion	Reference
10 - Single Failure		
10.1 Failure of one component (equipment or control) shall not affect continuous operation.	Address potential failures (example failures - fan, backup power supply, switchgear).	DOE O 420.1B (Facility Safety, Chapter I, Sec. 3.b(8))
	The three F-PHEX fans are aligned as two operating, one in standby to provide redundancy. A fan failure is indicated as an alarm in the main control room. The standby fan starts automatically to restore full system operability. The two supply fans are powered from separate motor control centers, and the three exhaust fans are powered from two separate motor control centers. <u>Gap Analysis</u> Gap Number 55: Discretionary Gap - Fan MCCs are not distributed across different D/Gs.	
10.2 Automatic backup electrical power shall be provided to all critical instruments and equipment required to operate and monitor the confinement ventilation system.	[DOE Guidance Document does not provide any specific evaluation guidance discussion for this criteria]	DOE-HDBK-1169 (2.2.7)
	The 773-A D/G, EEP-DG-001, automatically provides standby power for the F Section exhaust system, which is not credited in the Safety Basis to actively mitigate consequences of any accident scenarios. Standby power is also automatically provided for the F-section supply fans. <u>Gap Analysis</u> No Gap	
10.3 Backup electrical power shall be provided to all critical instruments and equipment required to operate and monitor the confinement ventilation system.	NOTE: Safety Class is addressed through previous line.	DOE-HDBK-1169 (2.2.7)
	This evaluation criteria is NOT APPLICABLE, as it is an SS-only criteria. SRNL confinement ventilation systems are evaluated to SC criteria.	

Evaluation Criteria	Discussion	Reference
11 - Other Credited Functional Requirements		
11.1 Address any specific functional requirements for the confinement ventilation system (beyond the scope of those above) credited in the DSA.	[DOE Guidance Document does not provide any specific evaluation guidance discussion for this criteria]	10 CFR 830, Subpart B
	For the CPF and MSF exhausts, section F PHEX ducting up to and including the testable stages of HEPA filters is functionally classified as Safety Significant. This passive function provides confinement and filtration of airborne radionuclides. The filters are not credited with a dose reduction function. Therefore no additional DSA credited system functions will be identified. <u>Gap Analysis</u> No Gap	

Evaluation Criteria	Discussion	Reference
0 - Ventilation System Description & References		
0.1 System Description	N/A	N/A
	System Description A double-lab module, intended for chemical use only, is located in rooms F-101/107. The lab is equipped with four chemical hoods. These hoods have two dedicated exhaust fans and HEPA-filtered exhaust (the labs were originally intended for low-level radiation use) to a local stack. An auxiliary supply fan supplies air directly above each hood to supplement the building supply air. The auxiliary air system was designed and installed to help maintain proper air balance after installation of the double lab module. Both labs have always operated as non-radiological laboratories (WSRC-SA-2, Rev. 3, Section 2.4.1.6). The building shell, walls and roof associated with the LHEX system are qualified to PC-1.	

Evaluation Criteria	Discussion	Reference
0.2 System References	N/A	N/A

System Design Descriptions
- o F-Section Supply and Exhaust Systems, 773-A, System Design Description, M-SYD-A-00023, Rev. 4
- o ST5-23147, ST5-23148 - Lab Room F-101 Hood Exhaust, Sheets 1&2
- o ST5-23150, ST5-23160 - Lab Room F-101 Hood Exhaust & Supply, Electrical, Sheets 1&2
- o T-CLC-A-00011, F W ing Fragility Analysis
- o M-SYD-A-00024, IA, PLTA & Compressor Alternate CW
- o E-SYD-A-00008, 773-A D/G Standby Power System

Test Procedures
- o TP-02-773A-FW ING-02, 773-A, F Wing Air Balance Report
- o 5Q1.2, Procedure 484, Building Air Survey
- o TO-05-027, 773-A D/G Annual Design Load Test

Round Sheets and Other Procedures
- o ROD-OPS-2002-002 - Control Area Operator (CAO) Round Sheets
- o ROD-OPS-2002-003 - Facility Operator (FO) Round Sheets
- o AOP-06-007, W ildland Fire, Facility Ventilation Shutdown and/or Evacuation

Standards
- o DuPont Engineering Specifications 3027, 3017, 5998, 7591, 8728, H16J, SH1A.
- o SRS Procurement Specification M-SPP-G-00243, HEPA Filter Specification
- o SRS Engineering Standard 15888, HEPA Filter Requirements
- o DOE-STD-3020-2005, DOE Technical Standard - Specification for HEPA Filters Used by DOE Contractors
- o DOE-STD-3025-2007, DOE Technical Standard - Quality Assurance Inspection and Testing of HEPA Filters
- o UL 586, UL Standard for Safety, High Efficiency, Particulate, Air Filter Units, 1996
- o ANSI/ASME NQA-1, Quality Assurance Program Requirements for Nuclear Facilities

Miscellaneous
- o Ventilation System Evaluation Guidance for Safety-Related and Non-Safety Related Systems, January 2006
- o 2004-2 Ventilation System Evaluation Guidance Addendum, March 2007
- o SRNL-ROE-2007-00063, SRNL Table 4-3 Submittal to DOE-SR, April 2007
- o WSRC-SA-2, SRNL Technical Area (TA) Documented Safety Analysis (DSA), Revision 3
- o WSRC-TS-97-00014, SRNL Technical Area (TA) Technical Safety Requirements (TSRs), Revision 4
- o SRNL-ESD-2007-00017, Structural Integrity Program Scope, Resources & Estimate, February 2007

Evaluation Criteria	Discussion	Reference
1 - Ventilation System – General Criteria		
1.1 Pressure differential should be maintained between zones and atmosphere.	Number of zones as credited by accident analysis to control hazardous material release; demonstrate by use considering potential in-leakage.	DOE-HDBK-1169 (2.2.9) ASHRAE Design Guide
	Confinement Zones • Primary Confinement F-101/107 Lab Hoods/ Ducting through 1st testable HEPA filter stage • Secondary Confinement F-101/107 lab modules • Tertiary Confinement F-190 Corridor and adjacent storage areas The confinement zones associated with Lab F-101/107 are not credited in the DSA with preventing or mitigating a design basis accident. All of the equipment is classified as General Service (GS). However, the essential elements of the DOE Nuclear Air Cleaning Handbook, DOE-HNBK-1169-2003, Table 2.8 are met. The hoods are annually certified to meet the prescribed face velocity of 80-100 linear FPM as recommended by the ACGIH Industrial Ventilation Manual. Air flow is from the secondary zone to the primary zone. Each hood has an exhaust damper for air balancing and isolation to prevent backflow when out of service. The F-101/107 lab modules are maintained at a negative pressure relative to the adjacent corridor and rooms (tertiary zone). Gap Analysis No Gap.	
1.2 Materials of construction should be appropriate for normal, abnormal and accident conditions.	[DOE Guidance Document does not provide any specific evaluation guidance discussion for this criteria]	DOE-HDBK-1169 (2.2.5) ASME AG-1
	The F-LHEX system ductwork is fabricated from stainless steel sheet 24 ga. or greater thickness, of welded construction. The material was selected to be resistant to corrosion resulting from chemical fumes and moisture, anticipated from chemical reagents and research activities. System dampers are also constructed from stainless steel with chemically resistant valve trim. The filter housings are also constructed from grade 304 stainless steel and use neoprene gaskets for chemical resistance. The system fans, located downstream of the HEPA filters, are constructed from carbon steel. Gap Analysis No Gap. Materials of construction are appropriate for normal, abnormal and accident conditions.	

Evaluation Criteria	Discussion	Reference
1.3 Exhaust system should withstand anticipated normal, abnormal and accident system conditions and maintain confinement integrity.	As required by accident analysis to prevent accident release.	DOE-HDBK-1169 (2.4) ASHRAE Design Guide
	The following accident scenarios are considered. Process explosion -- accumulation of propane, oxygen, hydrogen, acetylene gas etc. or benzene, formic acid or other flammable chemicals etc. stored in lab explode external to containment. --Ventilation systems would operate normally to maintain a positive pressure differential into the affected lab. Exhaust flows through HEPA filtration are believed adequate to contain mobilized contaminants. If the HEPA filter plugs, the contaminants would be contained within the lab and ductwork. Lab walls and ductwork would passively contain contaminants. Explosion -- Accumulation of Distributed Flammable Gas with no consequential fire - Not applicable. F-Section has no distributed flammable gas. The propane supply valves are administratively controlled closed. Drop / Spill -- Ventilation systems would operate normally to draw room air toward the hoods. Normal room infiltration would contain the spill to the F-101/107. The design exhaust flow from the lab module is 4200 CFM. This robust flow would effectively control airborne hazardous chemicals. Exhaust flows through HEPA filtration are believed adequate to contain mobilized contaminants. If the HEPA plugs, the contaminants would be contained within the lab and ductwork. If filter housings or ducting are compromised, the F-PHEX duct systems would contain the hazardous material. <u>Gap Analysis</u> No Gap.	

Evaluation Criteria	Discussion	Reference
1.4 Confinement ventilation systems shall have appropriate filtration to minimize release.	Address: 1) Type of filter (e.g., HEPA, sand, sintered metal); 2) Filter sizing (flow capacity and pressure drop); 3) Decontamination Factor vs. accident analysis assumptions.	ASME AG-1 DOE-HDBK-1169 (2.2.1)
	Nuclear Grade HEPA filters are procured to SRS Specification M-SPP-G-00243 which incorporates the requirements of ASME AG-1. The F-LHEX system enclosures are exhausted through HEPA filters which are periodically leak tested in place to ensure a filtration efficiency of 99.95%. This efficiency was qualitatively selected to ensure that the HEPA filter is properly installed to support the passive confinement function. Prior to receipt the filters are tested at the Independent Filter Testing Facility (FTF) to confirm an efficiency of at least 99.97% for a decontamination factor DF = 3333. Decontamination factor has not been considered in the facility DSA. The HEPA filters serving the F-101/107 laboratory fume hoods are installed in totally enclosed stainless steel housings with bag-in, bag-out filter changeout feature. The design system exhaust flow is 4200 CFM. The HEPA filter housing has four (4) 1500 CFM rated filters arranged in parallel to adequately handle the maximum expected LHEX flow. <u>Gap Analysis</u> No Gap.	

Evaluation Criteria	Discussion	Reference
2 - Ventilation System – Instrumentation & Control		
2.1 Provide system status instrumentation and/or alarms.	Address key information to ensure system operability (e.g., system delta-P, filter pressure drop).	ASME AG-1 DOE-HDBK-1169 ASHRAE Design Guide (Section 4)
	The F-LHEX ventilation system has no status instrumentation or alarms. <u>Gap Analysis</u>: Gap Number 45: Discretionary Gap - HEPA filters are not provided with ΔP instrumentation. Gap Number 46: Discretionary Gap - The system does not have any status instrumentation or alarms.	
2.2 Interlock supply and exhaust fans to prevent positive pressure differential.	[DOE Guidance Document does not provide any specific evaluation guidance discussion for this criteria]	DOE-HDBK-1169 ASHRAE Design Guide (Section 4)
	The supply fan is electrically interlocked with the exhaust fans. An exhaust fan must be running before the supply fan can be started and stopping the LHEX fan will stop the supply fan A supply fan start/stop control button station is provided in F-101. <u>Gap Analysis</u> No Gap	
2.3 Post accident indication of filter break-through.	Instrumentation supports post accident planning and response; should be considered critical instrumentation for SC.	TECH-34
	The F-LHEX hoods are used exclusively as chemical fume hoods. A stack sampling system is installed but is not operational. <u>Gap Analysis:</u> Gap Number 47: Discretionary Gap - Emission point from tertiary confinement zone does not have post accident indication of filter break through.	

Evaluation Criteria	Discussion	Reference
2.4 Reliability of control system to maintain confinement function under normal, abnormal and accident conditions.	Address, for example, impacts of potential common mode failures from events that would require active confinement function.	DOE-HDBK-1169 (2.4)
	Controls are minimal in the F-LHEX system. Existing auxiliary supply fan start interlock is sufficient for current system use. The labs were originally intended, designed, built (1980's) for low-level radiation work within its four fume hoods. Since 1997, the labs have been used for chemical service (non-radiological) by the Defense Waste Processing Technical (DWPT) group at SRNL. DWPT performs batching of chemicals for glass production, melting of the batches, grinding of the glasses and leach testing on the experimental glass. Although designed and installed for low level radiological & chemical service, both labs have always operated as non-radiological laboratories (WSRC-SA-2, Rev. 3, Section 2.4.1.6). <u>GAP Analysis:</u> No Gap.	
2.5 Control components should fail safe.	[DOE Guidance Document does not provide any specific evaluation guidance discussion for this criteria]	DOE-HDBK-1169 (2.4)
	Controls are simple and minimal in the F-LHEX system. Existing auxiliary supply fan start interlock is sufficient for current system use. Although designed and installed for low level radiological & chemical service, both labs have always operated as non-radiological laboratories. <u>GAP Analysis:</u> No Gap.	

Evaluation Criteria	Discussion	Reference
3 - Resistance to Internal Events – Fire		
3.1 Confinement ventilation systems should withstand credible fire events and be available to operate and maintain confinement.	Required for new facilities; as required by the accident analysis for existing facilities (discretionary). Must address protection of filter media.	DOE-HDBK-1169 (10.1) DOE-STD-1066
	As discussed in Table 4-3 transmittal letter SRNL-ROE-2007-00063, Attachment 4, Table 1, this evaluation criteria is NOT APPLICABLE. Per Ventilation System Evaluation Guidance for Safety-Related and Non-Safety Related Systems, Revision 0, January 2006, Page 21 and 22 Discussion, the evaluation of internal fire events for an existing facility is only required if the accident analysis takes credit for the active confinement ventilation system.	
3.2 Confinement ventilation systems should not propagate spread of fire.	Required for new facilities; as required by the accident analysis for existing facilities (discretionary). Address fire barriers, fire dampers arrangement.	DOE-HDBK-1169 (10.1) DOE-STD-1066
	As discussed in Table 4-3 transmittal letter SRNL-ROE-2007-00063, Attachment 4, Table 1, this evaluation criteria is NOT APPLICABLE. Per Ventilation System Evaluation Guidance for Safety-Related and Non-Safety Related Systems, Revision 0, January 2006, Page 21 and 22 Discussion, the evaluation of internal fire events for an existing facility is only required if the accident analysis takes credit for the active confinement ventilation system.	

Evaluation Criteria	Discussion	Reference
4 - Resistance to External Events – Natural Phenomena – Seismic		
4.1 Confinement ventilation systems should safely withstand earthquakes.	If the active CVS system is not credited in a seismic accident condition there is no need to evaluate that performance and/or design attribute for the confinement ventilation system (discretionary). Also, any seismic impact on the confinement ventilation system performance will be based on the current functional requirements in the DSA. NOTE: Seismic requirements may apply to Defense-in-Depth items indirectly for the protection of safety SSCs.	ASME AG-1 (AA) DOE O 420.1B DOE-HDBK-1169 (9.2)
	As discussed in Table 4-3 transmittal letter SRNL-ROE-2007-00063, Attachment 4, Table 1, this evaluation criteria is NOT APPLICABLE. Per 2004-2 Ventilation System Evaluation Guidance Addendum, March 6, 2007, Caution 4 and Ventilation System Evaluation Guidance for Safety-Related and Non-Safety Related Systems, Revision 0, January 2006, Page 22 Discussion, the evaluation of seismic events is only required if the accident analysis takes credit for the active confinement ventilation system during or after the NPH event.	

Evaluation Criteria	Discussion	Reference
5 - Resistance to External Events – Natural Phenomena – Tornado/Wind		
5.1 Confinement ventilation systems should safely withstand tornado depressurization.	If the active CVS is not credited in a tornado condition there is no need to evaluate that performance and/or design attribute for the confinement ventilation system (discretionary). Also, any tornado impact on the confinement ventilation system performance will be based on the current functional requirements in the DSA.	DOE O 420.1B DOE-HDBK-1169 (9.2)
	As discussed in Table 4-3 transmittal letter SRNL-ROE-2007-00063, Attachment 4, Table 1, this evaluation criteria is NOT APPLICABLE. Per 2004-2 Ventilation System Evaluation Guidance Addendum, March 6, 2007, Caution 4 and Ventilation System Evaluation Guidance for Safety-Related and Non-Safety Related Systems, Revision 0, January 2006, Pages 22 and 23 Discussion, the evaluation of tornado and wind events is only required if the accident analysis takes credit for the active confinement ventilation system during or after the NPH event.	
5.2 Confinement ventilation systems should withstand design wind effects on system performance.	If the active CVS is not credited in a wind condition there is no need to evaluate that performance and/or design attribute for the confinement ventilation system (discretionary). Also, any wind impact on the confinement ventilation system performance will be based on the current NP analysis in the DSA.	DOE O 420.1B DOE-HDBK-1169 (9.2)
	As discussed in Table 4-3 transmittal letter SRNL-ROE-2007-00063, Attachment 4, Table 1, this evaluation criteria is NOT APPLICABLE. Per 2004-2 Ventilation System Evaluation Guidance Addendum, March 6, 2007, Caution 4 and Ventilation System Evaluation Guidance for Safety-Related and Non-Safety Related Systems, Revision 0, January 2006, Pages 22 and 23 Discussion, the evaluation of tornado and wind events is only required if the accident analysis takes credit for the active confinement ventilation system during or after the NPH event.	

Evaluation Criteria	Discussion	Reference
6 - Other NP Events (eg. flooding, precipitation)		
6.1 Confinement ventilation system should withstand other NP events considered credible in the DSA where the confinement ventilation system is credited.	If the active confinement ventilation system is not credited for this event there is no need to evaluate that performance and/or design attribute for the confinement ventilation system (discretionary). Also, any impact on the confinement ventilation system performance will be based on the current NP analysis in the DSA.	DOE O 420.1B DOE-HDBK-1169 (9.2)
	As discussed in Table 4-3 transmittal letter SRNL-ROE-2007-00063, Attachment 4, Table 1, this evaluation criteria is NOT APPLICABLE. Per 2004-2 Ventilation System Evaluation Guidance Addendum, March 6, 2007, Caution 4 and Ventilation System Evaluation Guidance for Safety-Related and Non-Safety Related Systems, Revision 0, January 2006, Page 23 Discussion, the evaluation of other NPH events is only required if the accident analysis takes credit for the active confinement ventilation system during or after the NPH event.	

Evaluation Criteria	Discussion	Reference
7 - Range Fires / Dust Storms		
7.1 Administrative controls should be established to protect confinement ventilation systems from barrier threatening events.	Ensure appropriately thought out response to external threat is defined (e.g. pre-fire plan).	DOE O 420.1B
	The Savannah River Forestry Department is responsible for fire fighting efforts in regards to wildland fires. They also have a program of controlled burns and mechanical thinning of underbrush to limit or prevent wildland fires spreading out of control. If the fire encroaches upon SRNL, the Savannah River Site Fire Department will direct extinguishing efforts. Building 773-A has a current Fire Pre Plan and has procedures to reduce confinement ventilation system air flow (originally develop for electrical system maintenance) that will minimize soot loading of the filters in the ventilation systems. Reference: AOP-06-007 Dust storms are not an issue at the Savannah River Site due to the regional climate. <u>Gap Analysis</u> No Gap. Administrative controls are sufficient to protect the confinement ventilation systems for barrier threatening events.	

Evaluation Criteria	Discussion	Reference
8 - Testability		
8.1 Design supports the periodic inspection and testing of filters and housing, and test and inspections are conducted periodically.	Ability to test for leakage per intent of N510.	DOE-HDBK-1169 (2.3.8) ASME AG-1 ASME N510
	All four hoods are filtered by a common, testable, stainless steel Flanders HEPA filter housing (nominal cross-section 4'x4') that is located on the Section E lower roof. The housing contains (4) 24" x 24" HEPA filters in a 2-wide x 2-high configuration, a prefilter, and test connections for in-place aerosol leak testing. Although designed and installed for low level radiological & chemical service, both labs have always operated as non-radiological laboratories (WSRC-SA-2, Rev. 3, Section 2.4.1.6). <u>Gap Analysis</u> No Gap.	
8.2 Instrumentation required to support system operability is calibrated.	Credited instrumentation should have specified calibration / surveillance requirements. Non-safety instrumentation should be calibrated as necessary to support system functionality.	DOE-HDBK-1169 (2.3.8)
	No instrumentation is installed on the F-LHEX system. <u>Gap Analysis:</u> No Gap. If non-safety instrumentation is added to close other gaps, it will be calibrated as needed.	
8.3 Integrated system performance testing is specified and performed.	Required responses assumed in the accident analysis must be periodically confirmed including any time constraints.	DOE-HDBK-1169 (2.3.8)
	An integrated test is not performed nor necessary for current use of the labs. The HEPA filters are leak tested on a routine basis. Evaluation criteria is not applicable. The F-LHEX system is not credited in the SRNL DSA. The labs were originally intended, designed, and built (1980's) for low-level radiation work within its four fume hoods. Although designed and installed for low level radiological & chemical service, both labs have always operated as non-radiological laboratories (WSRC-SA-2, Rev. 3, Section 2.4.1.6). <u>Gap Analysis</u> No Gap.	

Evaluation Criteria	Discussion	Reference
9 - Maintenance		
9.1 Filter service life program should be established.	Filter life (shelf life, service life, total life) expectancy should be determined. Consider: filter environment, maximum delta-P, radiological loading, age, and potential chemical exposure.	DOE-HDBK-1169 (3.1 & App C)
	Per requirements of SRS Engineering Standard 15888, a Filter service life program has been established for this system. This standard is the basis of the Nuclear Air Cleaning Handbook Appendix C. The filters have a maximum shelf life of 3 years and total life of 10 years. Program is tracked using the Computerized Maintenance Management System . Filter environment is considered. Air drawn into the F-LHEX system is ambient temperature indoor conditioned air with a relative humidity ~ 50%. Therefore moisture accumulation that will adversely affect the filter media is not expected and has not been previously encountered. <u>Gap Analysis</u> No Gap	

Evaluation Criteria	Discussion	Reference
10 - Single Failure		
10.1 Failure of one component (equipment or control) shall not affect continuous operation.	Address potential failures (example failures - fan, backup power supply, switchgear).	DOE O 420.1B (Facility Safety, Chapter I, Sec. 3.b(8))
	The F-LHEX system is not credited in the DSA with a preventive or mitigative function following a design basis accident. The system is functionally classified as General Service (GS). Disabling of the system by a single failure of one system component would have no adverse effect offsite or to the co-located worker. Although designed and installed for low level radiological & chemical service, both labs have always operated as non-radiological laboratories (WSRC-SA-2, Rev. 3, Section 2.4.1.6). While the exhaust system is provided with redundant fans, the system is not equipped with any automatic controls to start the standby fan in the event of a failure or provide indication to the control room that the standby fan be manually started. Also the exhaust fans are power from the same motor control center <u>Gap Analysis:</u> Gap Number 48: Discretionary Gap - Failure of online fan does not automatically start the Standby fan. Gap Number 49: Discretionary Gap - Fans are provided standby power from the same Motor Control Center.	
10.2 Automatic backup electrical power shall be provided to all critical instruments and equipment required to operate and monitor the confinement ventilation system.	[DOE Guidance Document does not provide any specific evaluation guidance discussion for this criteria]	DOE-HDBK-1169 (2.2.7)
	The exhaust system is with standby power from MCC-29. No radioactive work is performed in the laboratory. The make-up air system for the laboratory space is not provided with standby power. The main exhaust system (F Process Hood Exhaust System) maintains this portion of facility at a negative pressure to the environment in the event that the Local Hood Exhaust System is not operational <u>Gap Analysis:</u> No Gaps	
10.3 Backup electrical power shall be provided to all critical instruments and equipment required to operate and monitor the confinement ventilation system.	NOTE: Safety Class is addressed through previous line.	DOE-HDBK-1169 (2.2.7)
	This evaluation criteria is NOT APPLICABLE, as it is an SS-only criteria. SRNL confinement ventilation systems are evaluated to SC criteria.	

Evaluation Criteria	Discussion	Reference
11 - Other Credited Functional Requirements		
11.1 Address any specific functional requirements for the confinement ventilation system (beyond the scope of those above) credited in the DSA.	[DOE Guidance Document does not provide any specific evaluation guidance discussion for this criteria]	10 CFR 830, Subpart B
	Not Applicable.	

Evaluation Criteria	Discussion	Reference
0 - Ventilation System Description & References		
0.1 System Description	N/A	N/A
	System Description Section F is equipped with two 100% outside air, HVAC supply air handling units (AHUs) that provide once-through conditioned air to office areas, corridors, and operating areas on the main and service floors. Each F-HVAC unit is independently ducted to supply one side of Section F main and service floors as shown on facility design drawings. A system crossover damper is provided such that one fan supplies the entire F-section if the other fan is inoperable. The amount of air exhausted from tertiary and secondary zones (with low hazard potential) is greater than the amount of supply air to ensure positive airflow from offices, corridors, service corridors and operating areas with a greater potential for radiological contamination. Reference Attachment 11 Figure B for a system single line. An Auxiliary HVAC Supply Air system supplies filtered and conditioned makeup air (nominal 2,400 cfm) to the face of the four chemical hoods in Dual Lab Module (F-101/F-107). This air supplements the main F-wing supply. The building shell, walls and roof associated with the HVAC system are qualified to PC-1.	

Evaluation Criteria	Discussion	Reference
0.2 System References	N/A	N/A
	System Design Descriptions o M-SYD-A-00023 Rev. 3, F-Section Supply & Exhaust Systems 773-A, System Design Description o T-CLC-A-00011, F W ing Fragility Analysis o M-SYD-A-00024, IA, PLTA & Compressor Alternate CW o E-SYD-A-00008, 773-A D/G Standby Power System Test procedures o TP-02-773A-FWING-02, 773-A, F Wing Air Balance Report o 5Q1.2, Procedure 484, Building Air Survey o TO-05-027, 773-A D/G Annual Design Load Test Round Sheets and Other Procedures o ROD-OPS-2002-002 - Control Area Operator (CAO) Round Sheets o ROD-OPS-2002-003 - Facility Operator (FO) Round Sheets o AOP-06-007, W ildland Fire, Facility Ventilation Shutdown and/or Evacuation Standards o DuPont Engineering Specifications 3027, 3017, 5998, 7591, 8728, H16J, SH1A. o SRS Procurement Specification M-SPP-G-00243, HEPA Filter Specification o SRS Engineering Standard 15888, HEPA Filter Requirements o DOE-STD-3020-2005, DOE Technical Standard - Specification for HEPA Filters Used by DOE Contractors o DOE-STD-3025-2007, DOE Technical Standard - Quality Assurance Inspection and Testing of HEPA Filters o UL 586, UL Standard for Safety, High Efficiency, Particulate, Air Filter Units, 1996 o ANSI/ASME NQA-1, Quality Assurance Program Requirements for Nuclear Facilities Miscellaneous o Ventilation System Evaluation Guidance for Safety-Related and Non-Safety Related Systems, January 2006 o 2004-2 Ventilation System Evaluation Guidance Addendum, March 2007 o SRNL-ROE-2007-00063, SRNL Table 4-3 Submittal to DOE-SR, April 2007 o WSRC-SA-2, SRNL Technical Area (TA) Documented Safety Analysis (DSA), Revision 3 o WSRC-TS-97-00014, SRNL Technical Area (TA) Technical Safety Requirements (TSRs), Revision 4 o SRNL-ESD-2007-00017, Structural Integrity Program Scope, Resources & Estimate, February 2007	

Evaluation Criteria	Discussion	Reference
1 - Ventilation System – General Criteria		
1.1 Pressure differential should be maintained between zones and atmosphere.	Number of zones as credited by accident analysis to control hazardous material release; demonstrate by use considering potential in-leakage.	DOE-HDBK-1169 (2.2.9) ASHRAE Design Guide
	The amount of air exhausted from tertiary and secondary confinement zones is greater than the amount of supply air to ensure positive airflow from offices, corridors, service corridors to operating areas and radiological enclosures with a greater potential for radiological contamination. The F-Section exhaust as measured during the most recent air balance procedure is 35,000 CFM. The F-HVAC (supply) measured flow is 18,200 CFM. A robust air flow from tertiary to secondary to primary confinement zones is maintained. <u>GAP Analysis</u> No Gap	
1.2 Materials of construction should be appropriate for normal, abnormal and accident conditions.	[DOE Guidance Document does not provide any specific evaluation guidance discussion for this criteria]	DOE-HDBK-1169 (2.2.5) ASME AG-1
	The two HVAC Supply units, located on the east roof of Section F, provide conditioned air to office, corridor and operating areas. One unit serves the east side of Section F while the other unit serves the west side. These supply units utilize building steam for heating and chilled water for cooling. The supply units operate with 100% outside air intake. The F-HVAC fans are housed within the AHU and are made of carbon steel. Outside controls are housed in weather proof enclosures. The flexible connection between the AHU and the Section F HVAC supply ductwork is fabric, non--burning neoprene with glued joints, per DuPont STD H16J. Supply ductwork is made of galvanized carbon steel per DuPont STD H1J and was fabricated and installed per SRS specification 4431. Flanged ductwork joints are one piece full face 1/8" thick neoprene. <u>GAP Analysis</u>: No Gap. Materials of construction are appropriate for normal, abnormal and accident conditions.	
1.3 Exhaust system should withstand anticipated normal, abnormal and accident system conditions and maintain confinement integrity.	As required by accident analysis to prevent accident release.	DOE-HDBK-1169 (2.4) ASHRAE Design Guide
	The system evaluated is a supply (not exhaust) system. See the appropriate exhaust systems for Section F (Attachments 6 and 7) for evaluation of this criteria. <u>Gap Analysis</u> No Gap	
1.4 Confinement ventilation systems shall have appropriate filtration to minimize release.	Address: 1) Type of filter (e.g., HEPA, sand, sintered metal); 2) Filter sizing (flow capacity and pressure drop); 3) Decontamination Factor vs. accident analysis assumptions.	ASME AG-1 DOE-HDBK-1169 (2.2.1)
	The Section F HVAC system performs no filtration function to minimize release. See F-PHEX and F-LHEX systems. <u>Gap Analysis</u> No Gap	

Evaluation Criteria	Discussion	Reference
2 - Ventilation System – Instrumentation & Control		
2.1 Provide system status instrumentation and/or alarms.	Address key information to ensure system operability (e.g., system delta-P, filter pressure drop).	ASME AG-1 DOE-HDBK-1169 ASHRAE Design Guide (Section 4)
	Indication of F-HVAC operation status and alarms are provided on Control Room Console Cabinet #1 located in room C-041 (manned continuously). The indicator lamps are illuminated when the Section F HVAC fans are running. The F-Wing Ventilation Control Panel, located in room F-090, provides a digital display for the two (2) supply fan discharge plenum pressures. Local supply fan discharge pressure gauges are also available. The Ventilation Trouble alarm annunciates when the HVAC supply pressure is low. <u>GAP Analysis</u>: No Gap. System status and monitoring features in the F-HVAC supply system are adequate.	
2.2 Interlock supply and exhaust fans to prevent positive pressure differential.	[DOE Guidance Document does not provide any specific evaluation guidance discussion for this criteria]	DOE-HDBK-1169 ASHRAE Design Guide (Section 4)
	The F-section supply and exhaust fans are interlocked to prevent a positive pressure differential. The F-section supply fans are controlled by the F-PHEX fans such that the lead supply fan will not start unless the exhaust fan plenum static pressure is below - 3 in. wc. The second supply fan will not start unless the exhaust fan inlet plenum static pressure is below -5 in. wc. <u>Gap Analysis</u> No Gap	
2.3 Post accident indication of filter break-through.	Instrumentation supports post accident planning and response; should be considered critical instrumentation for SC.	TECH-34
	This evaluation criteria is not applicable for any of the supply fans being evaluated for Section F. See evaluation sections for F-PHEX and F-LHEX that discuss the exhaust systems in Section F. The F-HVAC supply air system, Double Lab Module Supply Unit, and F-081 Airlock Supply Unit are not exhaust systems and do not contain HEPA filters that are used to minimize exhaust releases. <u>Gap Analysis</u> No Gap	
2.4 Reliability of control system to maintain confinement function under normal, abnormal and accident conditions.	Address, for example, impacts of potential common mode failures from events that would require active confinement function.	DOE-HDBK-1169 (2.4)
	Not applicable. The fans are not credited in a confinement function, but serve to provide conditioned outside air to the facility. <u>Gap Analysis</u> No Gap	

Evaluation Criteria	Discussion	Reference
2.5 Control components should fail safe.	[DOE Guidance Document does not provide any specific evaluation guidance discussion for this criteria]	DOE-HDBK-1169 (2.4)
	The F-HVAC supply fans fail in a safe condition. The fans are not credited in a confinement function, but serve to provide conditioned outside air to the facility. <u>Gap Analysis</u> No Gap	

Evaluation Criteria	Discussion	Reference
3 - Resistance to Internal Events – Fire		
3.1 Confinement ventilation systems should withstand credible fire events and be available to operate and maintain confinement.	Required for new facilities; as required by the accident analysis for existing facilities (discretionary). Must address protection of filter media.	DOE-HDBK-1169 (10.1) DOE-STD-1066
	As discussed in Table 4-3 transmittal letter SRNL-ROE-2007-00063, Attachment 4, Table 1, this evaluation criteria is NOT APPLICABLE. Per Ventilation System Evaluation Guidance for Safety-Related and Non-Safety Related Systems, Revision 0, January 2006, Page 21 and 22 Discussion, the evaluation of internal fire events for an existing facility is only required if the accident analysis takes credit for the active confinement ventilation system.	
3.2 Confinement ventilation systems should not propagate spread of fire.	Required for new facilities; as required by the accident analysis for existing facilities (discretionary). Address fire barriers, fire dampers arrangement.	DOE-HDBK-1169 (10.1) DOE-STD-1066
	As discussed in Table 4-3 transmittal letter SRNL-ROE-2007-00063, Attachment 4, Table 1, this evaluation criteria is NOT APPLICABLE. Per Ventilation System Evaluation Guidance for Safety-Related and Non-Safety Related Systems, Revision 0, January 2006, Page 21 and 22 Discussion, the evaluation of internal fire events for an existing facility is only required if the accident analysis takes credit for the active confinement ventilation system.	

Evaluation Criteria	Discussion	Reference
4 - Resistance to External Events – Natural Phenomena – Seismic		
4.1 Confinement ventilation systems should safely withstand earthquakes.	If the active CVS system is not credited in a seismic accident condition there is no need to evaluate that performance and/or design attribute for the confinement ventilation system (discretionary). Also, any seismic impact on the confinement ventilation system performance will be based on the current functional requirements in the DSA. NOTE: Seismic requirements may apply to Defense-in-Depth items indirectly for the protection of safety SSCs.	ASME AG-1 (AA) DOE O 420.1B DOE-HDBK-1169 (9.2)
	As discussed in Table 4-3 transmittal letter SRNL-ROE-2007-00063, Attachment 4, Table 1, this evaluation criteria is NOT APPLICABLE. Per 2004-2 Ventilation System Evaluation Guidance Addendum, March 6, 2007, Caution 4 and Ventilation System Evaluation Guidance for Safety-Related and Non-Safety Related Systems, Revision 0, January 2006, Page 22 Discussion, the evaluation of seismic events is only required if the accident analysis takes credit for the active confinement ventilation system during or after the NPH event.	

Evaluation Criteria	Discussion	Reference
5 - Resistance to External Events – Natural Phenomena – Tornado/Wind		
5.1 Confinement ventilation systems should safely withstand tornado depressurization.	If the active CVS is not credited in a tornado condition there is no need to evaluate that performance and/or design attribute for the confinement ventilation system (discretionary). Also, any tornado impact on the confinement ventilation system performance will be based on the current functional requirements in the DSA.	DOE O 420.1B DOE-HDBK-1169 (9.2)
	As discussed in Table 4-3 transmittal letter SRNL-ROE-2007-00063, Attachment 4, Table 1, this evaluation criteria is NOT APPLICABLE. Per 2004-2 Ventilation System Evaluation Guidance Addendum, March 6, 2007, Caution 4 and Ventilation System Evaluation Guidance for Safety-Related and Non-Safety Related Systems, Revision 0, January 2006, Pages 22 and 23 Discussion, the evaluation of tornado and wind events is only required if the accident analysis takes credit for the active confinement ventilation system during or after the NPH event.	
5.2 Confinement ventilation systems should withstand design wind effects on system performance.	If the active CVS is not credited in a wind condition there is no need to evaluate that performance and/or design attribute for the confinement ventilation system (discretionary). Also, any wind impact on the confinement ventilation system performance will be based on the current NP analysis in the DSA.	DOE O 420.1B DOE-HDBK-1169 (9.2)
	As discussed in Table 4-3 transmittal letter SRNL-ROE-2007-00063, Attachment 4, Table 1, this evaluation criteria is NOT APPLICABLE. Per 2004-2 Ventilation System Evaluation Guidance Addendum, March 6, 2007, Caution 4 and Ventilation System Evaluation Guidance for Safety-Related and Non-Safety Related Systems, Revision 0, January 2006, Pages 22 and 23 Discussion, the evaluation of tornado and wind events is only required if the accident analysis takes credit for the active confinement ventilation system during or after the NPH event.	

Evaluation Criteria	Discussion	Reference
6 - Other NP Events (eg. flooding, precipitation)		
6.1 Confinement ventilation system should withstand other NP events considered credible in the DSA where the confinement ventilation system is credited.	If the active confinement ventilation system is not credited for this event there is no need to evaluate that performance and/or design attribute for the confinement ventilation system (discretionary). Also, any impact on the confinement ventilation system performance will be based on the current NP analysis in the DSA.	DOE O 420.1B DOE-HDBK-1169 (9.2)
	As discussed in Table 4-3 transmittal letter SRNL-ROE-2007-00063, Attachment 4, Table 1, this evaluation criteria is NOT APPLICABLE. Per 2004-2 Ventilation System Evaluation Guidance Addendum, March 6, 2007, Caution 4 and Ventilation System Evaluation Guidance for Safety-Related and Non-Safety Related Systems, Revision 0, January 2006, Page 23 Discussion, the evaluation of other NPH events is only required if the accident analysis takes credit for the active confinement ventilation system during or after the NPH event.	

Evaluation Criteria	Discussion	Reference
7 - Range Fires / Dust Storms		
7.1 Administrative controls should be established to protect confinement ventilation systems from barrier threatening events.	Ensure appropriately thought out response to external threat is defined (e.g. pre-fire plan).	DOE O 420.1B
	The Savannah River Forestry Department is responsible for fire fighting efforts in regards to wildland fires. They also have a program of controlled burns and mechanical thinning of underbrush to limit or prevent wildland fires spreading out of control. If the fire encroaches upon SRNL, the Savannah River Site Fire Department will direct extinguishing efforts. Building 773-A has a current Fire Pre Plan and has procedures to reduce confinement ventilation system air flow (originally develop for electrical system maintenance) that will minimize soot loading of the filters in the ventilation systems. Reference: AOP-06-007 Dust storms are not an issue at the Savannah River Site due to the regional climate. <u>Gap Analysis</u> No Gap. Administrative controls are sufficient to protect the confinement ventilation systems for barrier threatening events.	

Evaluation Criteria	Discussion	Reference
8 - Testability		
8.1 Design supports the periodic inspection and testing of filters and housing, and test and inspections are conducted periodically.	Ability to test for leakage per intent of N510.	DOE-HDBK-1169 (2.3.8) ASME AG-1 ASME N510
	Not Applicable. The F-HVAC system has no HEPA filters to be tested. <u>Gap Analysis</u> No Gap	
8.2 Instrumentation required to support system operability is calibrated.	Credited instrumentation should have specified calibration / surveillance requirements. Non-safety instrumentation should be calibrated as necessary to support system functionality.	DOE-HDBK-1169 (2.3.8)
	The F-HVAC system has no credited instrumentation. Therefore specified calibration / surveillance activities are not required. System instrumentation is calibrated as necessary to support system functionality: when the instrument is installed. Pressure indicators used for facility rounds are calibrated on a periodic basis (ex., transmitters are on a three year calibration cycle in the Computerized Maintenance Management System. <u>Gap Analysis</u> No Gap.	
8.3 Integrated system performance testing is specified and performed.	Required responses assumed in the accident analysis must be periodically confirmed including any time constraints.	DOE-HDBK-1169 (2.3.8)
	The F-HVAC system is not credited in the DSA accident analysis. Testing per the guidelines of ASME N510 is not relevant. Measurements of fan operating features, i.e. CFM capacity, static pressure, and RPM's, are recorded during the periodic F-section air balance activities. In addition, testing of the F supply fan/exhaust fan interlock is performed on a periodic basis as part of the integrated testing of the B and C Central Hood Exhaust Diversion Fan control system. <u>Gap Analysis</u> No Gap.	

Evaluation Criteria	Discussion	Reference
9 - Maintenance		
9.1 Filter service life program should be established.	Filter life (shelf life, service life, total life) expectancy should be determined. Consider: filter environment, maximum delta-P, radiological loading, age, and potential chemical exposure.	DOE-HDBK-1169 (3.1 & App C)
	Not applicable. The F-HVAC system has no HEPA filters installed. Supply air filters are changed as needed as part of a preventive maintenance program. <u>Gap Analysis</u> No Gap.	

Evaluation Criteria	Discussion	Reference
10 - Single Failure		
10.1 Failure of one component (equipment or control) shall not affect continuous operation.	Address potential failures (example failures - fan, backup power supply, switchgear).	DOE O 420.1B (Facility Safety, Chapter I, Sec. 3.b(8))
	Failure of one F-HVAC Fan opens the bypass damper immediately downstream of the AHUs resulting in reduced airflow to each side of Section F. Both F-HVAC fans have alternate backup power (standby DG) which allows continued use of both fans if the normal power switchgear is lost. Each fan is normally powered from a different MCC (MCC-21E & MCC-22E). Failure of F-HVAC control circuitry, instrumentation, components, or the instrument air system that powers the inlet dampers could diminish supply air flow to Section F. Loss of both F-HVAC supply fans would decrease the static pressure in the area, until the F-PHEX automatic static pressure control system reduced the exhaust flow to partially balance the lack of supply air. Local magnehelic gauges are available at the plenums if there is a loss of digital supply and exhaust plenum pressures on the Section F Ventilation Control Panel. Double Lab Module (F-101/F-107) Auxiliary Supply Fan: Failure of the fan, associated switchgear, control circuitry and components would render the supply system inoperable. Operations would suspend use of the four chemical hoods for activities that require auxiliary supply air until operational readiness is reestablished. It should be noted that current use of the labs does not require the supply fan and it is in standby. <u>Gap Analysis</u> No Gap.	
10.2 Automatic backup electrical power shall be provided to all critical instruments and equipment required to operate and monitor the confinement ventilation system.	[DOE Guidance Document does not provide any specific evaluation guidance discussion for this criteria]	DOE-HDBK-1169 (2.2.7)
	The F-HVAC system is not a critical, credited part of the facility safety basis. There is are no associated instruments or equipment required to operate and monitor the confinement ventilation system. The supply units are provided with automatic backup power from the 773-A Standby Diesel Generator, however. <u>Gap Analysis</u> No Gap.	
10.3 Backup electrical power shall be provided to all critical instruments and equipment required to operate and monitor the confinement ventilation system.	NOTE: Safety Class is addressed through previous line.	DOE-HDBK-1169 (2.2.7)
	This evaluation criteria is NOT APPLICABLE, as it is an SS-only criteria. SRNL confinement ventilation systems are evaluated to SC criteria.	

Evaluation Criteria	Discussion	Reference
11 - Other Credited Functional Requirements		
11.1 Address any specific functional requirements for the confinement ventilation system (beyond the scope of those above) credited in the DSA.	[DOE Guidance Document does not provide any specific evaluation guidance discussion for this criteria]	10 CFR 830, Subpart B
	None	

Evaluation Criteria	Discussion	Reference
0 - Ventilation System Description & References		
0.1 System Description	N/A	N/A
	System Description The SRNL Area Sand Filter (Buildings 794-A, 792-A and 791-A), provides for final treatment and discharge to the atmosphere of potentially contaminated ventilation exhaust serving Sections B, C, E & F of Building 773-A. All exhaust is HEPA filtered (from one to three stages) prior to reaching the sand filter. The sand filter serves as a backup system to minimize atmospheric releases of radioactive particulates in the event of HEPA filter failure. Reference Attachment 11 Figure C for a system single line. The sand filter is maintained at a negative pressure relative to its surroundings by two large blowers (Building 792-A) located just east of Building 794-A. The normal sand filter exhaust plenum pressure is 7 inwc vac. These blowers are in service to provide continuous exhaust through the Sand Filter. Operation of the Sand Filter is designed for continuous service. One fan is normally operating in the Run position while the alternate fan is in the Standby position. The fan in the Standby position will start when the Sand Filter exhaust plenum pressure drops to 1 inwc vac. The Sand Filter is also equipped with standby power (600 kW diesel generator) and radiological monitoring and sampling systems. The Sand Filter is equipped with a back pressure relief damper which provides an auxiliary passage for sand-filtered exhaust and protects the Sand Filter inlet ductwork from over pressurization. The Sand Filter discharges to a 100 foot stack (Building 791-A). The Sand Filter has no structural qualification on file. A cursory review, indicates that the intent was to design the Sand Filter itself (794-A, 792-A and 791-A) to meet PC-2 NPH Criteria. The limiting NPH qualification factors for the Sand Filter system are: 1) The inlet ductwork on the roof of 773-A is support by building framing in Sections E and F qualified to PC-1 and 2) the inlet ductwork on the roof of 773-A (Sections B, C, E and F) is not missile protected.	

Evaluation Criteria	Discussion	Reference
0.2 System References	N/A	N/A
	System Design Descriptions o G-SYD-A-00002, SRNL Area Sand Filter System o E-SYD-A-00001, SRNL Stack Monitoring Systems o M-SYD-A-00024, IA, PLTA & Compressor Alternate CW o E-SYD-A-00007, 794-A D/G Standby Power System Drawings o ST5-18755 o M-M6-A-0065 o W236483 o W447446 o W447512 o W447570 Test Procedures o TO-06-012, Functional Test Sand Filter Exhaust System Low Pressure Interlock o TO-06-016, Functional Test of Sand Filter Exhaust System Fans o TE-37-001, Annual Calibration of Eberline Monitors for 773-A B, C and Sand Filter Stacks o TE-37-004, Monthly Source Checking SRNL ALPHA-6A-1 Duct Monitors o TE-37-008, Source Checking the Eberline Monitors for 773-A B, C and Sand Filter Stacks o TO-05-023, 794-A D/G Annual Design Load Test o 5Q1.2, Procedure 484, Building Air Survey o TO-05-027, 773-A D/G Annual Design Load Test Round Sheets and Other Procedures o ROD-OPS-2002-002 - Control Area Operator (CAO) Round Sheets o ROD-OPS-2002-003 - Facility Operator (FO) Round Sheets o AOP-06-007, W ildland Fire, Facility Ventilation Shutdown and/or Evacuation o 2Y1/401 - Technical Reference Procedure for A & B Area, Appendix 51 o TM-75-003, Equipment Lubrication, Attachment 5 Standards o DuPont Engineering Specifications 3027, 3017, 5998, 7591, 8728, H16J, SH1A. o SRS Procurement Specification M-SPP-G-00243, HEPA Filter Specification o SRS Engineering Standard 15888, HEPA Filter Requirements o DOE-STD-3020-2005, DOE Technical Standard - Specification for HEPA Filters Used by DOE Contractors o DOE-STD-3025-2007, DOE Technical Standard - Quality Assurance Inspection and Testing of HEPA Filters o UL 586, UL Standard for Safety, High Efficiency, Particulate, Air Filter Units, 1996 o ANSI/ASME NQA-1, Quality Assurance Program Requirements for Nuclear Facilities Miscellaneous o Ventilation System Evaluation Guidance for Safety-Related and Non-Safety Related Systems, January 2006 o 2004-2 Ventilation System Evaluation Guidance Addendum, March 2007 o SRNL-ROE-2007-00063, SRNL Table 4-3 Submittal to DOE-SR, April 2007	

Evaluation Criteria	Discussion	Reference
	o WSRC-SA-2, SRNL Technical Area (TA) Documented Safety Analysis (DSA), Revision 3 o WSRC-TS-97-00014, SRNL Technical Area (TA) Technical Safety Requirements (TSRs), Revision 4 o SRNL-ESD-2007-00017, Structural Integrity Program Scope, Resources & Estimate, February 2007 o EOP-06-001, Loss of Both Sand Filter Exhaust System Fans	

Evaluation Criteria	Discussion	Reference
1 - Ventilation System – General Criteria		
1.1 Pressure differential should be maintained between zones and atmosphere.	Number of zones as credited by accident analysis to control hazardous material release; demonstrate by use considering potential in-leakage.	DOE-HDBK-1169 (2.2.9) ASHRAE Design Guide
	Confinement Zones Since the Fan Housing Sand Filter (FHSF) exhaust system serves as a backup system to the other SRNL confinement systems, refer to the specific system listed below for the identification of its confinement zones and differential pressure requirements. CE - Cell Exhaust (Sec E) CHEX - Central Hood Exhaust (Sec B & C) LHEX - Local Hood Exhaust (Sec E) OGE - Offgas Exhaust (Sec B, F & C) PHEX - Process Hood Exhaust (Sec B, C & F) RREX - Regulated Room Exhaust (Sec E) Gap Analysis No Gap	

Evaluation Criteria	Discussion	Reference
1.2 Materials of construction should be appropriate for normal, abnormal and accident conditions.	[DOE Guidance Document does not provide any specific evaluation guidance discussion for this criteria]	DOE-HDBK-1169 (2.2.5) ASME AG-1
	Materials of construction for above ground duct are as follows: 1. Stainless steel sheets, Grade S, type 304, No. 1 or 2B finish in accordance with ASTM A240, minimum thickness No. 16 gauge. (DuPont Engr. Spec. No. 3027, 06/21/51) 2. Stainless steel sheets, Grade S, type 304L, No. 1 or 2B finish in accordance with ASTM A240, minimum thickness No. 16 gauge (field welding) and No. 18 gauge (shop welding) . (DuPont Engr Spec No. 7591, 06/3/80) 3. Exhaust ducts constructed in Building 773-A by Project S-1175 in 1972 shall be not less than 20 gauge stainless steel and of welded construction (W236483, gen note 13). 4. All stainless steel duct is welded, gasketed, flanged and bolted. Materials of construction for below ground duct are reinforced concrete pipe or reinforced concrete (W447570, gen note). Materials of construction for the sand filter are reinforced concrete (W447446, gen note). The walls and floor are 16 inches thick and the roof is 10 inch thick supported by 30 inch diameter columns. Materials of construction of the seven layer gravel and sand filter bed in the sand filter are identified in G-SYD-A-00002 (2.2.1) and specified in DuPont Spec 5998. Materials of construction for the exhaust fans are mild steel with corrosion resistant coating (G-SYD-A-00002, 2.2.2). Materials of construction of ducts to and from exhaust fans at the sand filter are galvanized steel, all welded construction (W236483, gen note 14). Material of construction of the exhaust stack is Corten A steel (G-SYD-A-00002, 2.2.5). All materials of construction are appropriate for normal, abnormal and accident conditions. <u>Gap Analysis</u> No Gap - All materials of construction are appropriate for normal, abnormal and accident conditions.	

Evaluation Criteria	Discussion	Reference
1.3 Exhaust system should withstand anticipated normal, abnormal and accident system conditions and maintain confinement integrity.	As required by accident analysis to prevent accident release.	DOE-HDBK-1169 (2.4) ASHRAE Design Guide
	Normal Conditions The FHSF Sand Filter exhaust airflow normally contains the following HEPA filtered exhaust systems: BC & F PHEX, B/F & C OGE, B&C VAC, E CE, E RREX, E LHEX, B & C LAD, B & C HAD, AM The FHSF Sand Filter exhaust system consists of ducts (stainless steel, concrete and galvanized steel) downstream of these systems. This exhaust air is filtered in the sand filter by a seven layer stone, gravel and sand bed 7.5 feet thick. Air is continually exhausted from the sand filter by two large blowers (one operating and the other in automatic standby status). A 600 kW emergency diesel generator provides electrical power to the blowers, and radiological monitoring and sampling systems. Exhaust air is discharged to the atmosphere thru a 100 ft. high steel stack. Abnormal Conditions The following systems from Bldg 773-A are HEPA filtered and then exhausted to the sand filter during abnormal conditions: The section B & C diversion controls reroute the CHEX for either B or C section to the area sand filter. This diversion is performed manually under the direction of the Shift Operations Manager (SOM) when either the B or C stack monitoring systems detect radiation above preset levels. Controls located in Room E023 and the C041 Control Room allows the diversion controls to be activated. When a diversion is activated, exhaust air is pulled from the concrete plenum between the CHEX fans, and through a single duct to the roof of either B001 or C001, where the diversion fans are located. The diversion system for both B & C sections consists of two fans. One fan is placed in the lead and the other is in standby. Once activated, the lead fan will energize and the three CHEX fans will de-energize. This results in a reduction in flow from about 60,000 cfm to 20,000 cfm. Various supply units in sections B & C are shut down and one of two exhaust fans serving Section F is also shut down to prevent overloading the sand filter. Automatic dampers are actuated to control diversion flow paths. Standby power is provided to the diversion fans by the 794-A diesel generator. The sand filter is equipped with a 5'-5" square back pressure damper located at the north end of the discharge plenum roof. This damper provides an auxiliary passage for sand-filtered exhaust, and prevents the sand filter from over-pressurization. Accident Conditions The following accident scenarios are considered: o Process Explosion - Unstable Lab Chemical or Accumulation of Process Flammable Gas or VOCs with no consequential fire o Explosion - Glovebox Overpressurization o Explosion - Accumulation of Distributed Flammable Gas with no consequential fire o Drop / Spill Ventilation systems (CHEX, PHEX, OGE, CE, RREX, LHEX) would operate normally to contain accident materials by maintaining proper pressure differentials into the labs. Exhaust flows would be HEPA filtered and discharged to the FHSF Sand Filter, either normally, or in the case of CHEX normal exhaust, following diversion activation for high B or C stack	

Evaluation Criteria	Discussion	Reference
	activity. The FHSF Sand Filter offers desirable defense-in-depth protection. Fire detection systems would alert the C041 Control Room to shut down ventilation systems per procedures. Lab, cell walls, gloveboxes and ductwork would passively contain contaminants upstream from the HEPA filters. <u>Gap Analysis</u> No Gap	
1.4 Confinement ventilation systems shall have appropriate filtration to minimize release.	Address: 1) Type of filter (e.g., HEPA, sand, sintered metal); 2) Filter sizing (flow capacity and pressure drop); 3) Decontamination Factor vs. accident analysis assumptions. Air discharged to the SRNL Area Sand Filter is HEPA filtered at least once before reaching the Sand Filter. The Sand Filter provides an additional/back-up stage of filtration in the event to a HEPA filter failure in Building 773-A. The Sand Filter provides equivalent performance (typical removal efficiency is 99.97%) to the HEPA filtered exhaust systems which discharge to the Sand Filter. This translated to a decontamination factor (DF) of 3333. Decontamination factor has not been considered in the facility DSA. The Sand Filter was designed for an airflow of 74,000 cfm. Normal operating flow range is 62,000 cfm. The Sand Filter bed operates with a differential pressure of approximately 7.0 inches wc. No significant variations in bed differential pressure have been observed that have not correlated to changes in system airflow. <u>Gap Analysis</u> No Gap	ASME AG-1 DOE-HDBK-1169 (2.2.1)

Evaluation Criteria	Discussion	Reference
2 - Ventilation System – Instrumentation & Control		
2.1 Provide system status instrumentation and/or alarms.	Address key information to ensure system operability (e.g., system delta-P, filter pressure drop).	ASME AG-1 DOE-HDBK-1169 ASHRAE Design Guide (Section 4)
	Fan status indications are provided at the fans control station in 792-A and the SRNL control room located in 773-A. Sand Filter Inlet and Outlet (stack) air flow are monitored and recorded on facility round sheets. Low flow conditions alarm in the SRNL control room. Sand Filter Fan inlet plenum pressure is monitored and alarmed in the SRNL control room. Sand Filter Bed differential pressure is monitored and recorded on facility round sheets. Sand Filter Bed inlet sump is monitored for liquids and recorded on facility round sheets. The Sand Filter bed is equipped with localized differential pressure taps to measure differential pressure across different layers and sections of the bed if needed. The Sand Filter bed is equipped to with tubes to permit radiation profiling of the Sand Filter bed if needed. The Sand Filter inlet duct is provided with a continuous monitor to detect excessive alpha and beta-gamma activity being released to the sand filter. The monitors alarm in the SRNL control room if excessive activity is detected. <u>Gap Analysis</u> No Gap	
2.2 Interlock supply and exhaust fans to prevent positive pressure differential.	[DOE Guidance Document does not provide any specific evaluation guidance discussion for this criteria]	DOE-HDBK-1169 ASHRAE Design Guide (Section 4)
	Since the FHSF Sand Filter exhaust system serves as a backup to the other exhaust systems it has no supply fans. Supply fan interlocks will be described in the other systems listed in this table. <u>Gap Analysis</u> No Gap	

Evaluation Criteria	Discussion	Reference
2.3 Post accident indication of filter break-through.	Instrumentation supports post accident planning and response; should be considered critical instrumentation for SC.	TECH-34
	The sand filter stack is equipped with both an isokinetic sampling system for environmental compliance sampling, a stack air activity monitoring system to provide on-line indication in the SRNL control room and a sand filter inlet alpha and beta/gamma monitor which alarm in the SRNL control room. The two systems were installed in the 1990's and the inlet monitors were installed in the 1970's. <u>Gap Analysis</u> No Gap	
2.4 Reliability of control system to maintain confinement function under normal, abnormal and accident conditions.	Address, for example, impacts of potential common mode failures from events that would require active confinement function.	DOE-HDBK-1169 (2.4)
	The FHSF Sand Filter exhaust fans are continuously monitored by Operations personnel. Operation of the systems is controlled by operating procedures. System control is maintained during abnormal and accident conditions by AOPs and EOPs. If the exhaust fan inlet plenum pressure drops below 1 inwc vac, the operating fan automatically stops and the standby fan starts. Upon loss of power the 794-A standby diesel generator starts and restores electrical power. Other abnormal system operating conditions such as the system diversions discussed in Criteria 1.3 are accommodated by interlocks provided for these systems. These interlocks maintain the Sand Filter exhaust flow within normal limits. <u>Gap Analysis</u> No Gap	
2.5 Control components should fail safe.	[DOE Guidance Document does not provide any specific evaluation guidance discussion for this criteria]	DOE-HDBK-1169 (2.4)
	The Sand Filter Fan discharge dampers fail open upon a loss of instrument air or loss of power. This is to prevent over pressurization of the Sand Filter inlet SST ductwork from the 773-A which push air to the Sand Filter. If the exhaust fan control circuit fails and holds both discharge dampers closed, a back pressure relief damper on the Sand Filter bed discharge plenum opens to prevent the same over pressurization event. <u>Gap Analysis</u> No Gap	

Evaluation Criteria	Discussion	Reference
3 - Resistance to Internal Events – Fire		
3.1 Confinement ventilation systems should withstand credible fire events and be available to operate and maintain confinement.	Required for new facilities; as required by the accident analysis for existing facilities (discretionary). Must address protection of filter media.	DOE-HDBK-1169 (10.1) DOE-STD-1066
	As discussed in Table 4-3 transmittal letter SRNL-ROE-2007-00063, Attachment 4, Table 1, this evaluation criteria is NOT APPLICABLE. Per Ventilation System Evaluation Guidance for Safety-Related and Non-Safety Related Systems, Revision 0, January 2006, Page 21 and 22 Discussion, the evaluation of internal fire events for an existing facility is only required if the accident analysis takes credit for the active confinement ventilation system.	
3.2 Confinement ventilation systems should not propagate spread of fire.	Required for new facilities; as required by the accident analysis for existing facilities (discretionary). Address fire barriers, fire dampers arrangement.	DOE-HDBK-1169 (10.1) DOE-STD-1066
	As discussed in Table 4-3 transmittal letter SRNL-ROE-2007-00063, Attachment 4, Table 1, this evaluation criteria is NOT APPLICABLE. Per Ventilation System Evaluation Guidance for Safety-Related and Non-Safety Related Systems, Revision 0, January 2006, Page 21 and 22 Discussion, the evaluation of internal fire events for an existing facility is only required if the accident analysis takes credit for the active confinement ventilation system.	

Evaluation Criteria	Discussion	Reference
4 - Resistance to External Events – Natural Phenomena – Seismic		
4.1 Confinement ventilation systems should safely withstand earthquakes.	If the active CVS system is not credited in a seismic accident condition there is no need to evaluate that performance and/or design attribute for the confinement ventilation system (discretionary). Also, any seismic impact on the confinement ventilation system performance will be based on the current functional requirements in the DSA. NOTE: Seismic requirements may apply to Defense-in-Depth items indirectly for the protection of safety SSCs.	ASME AG-1 (AA) DOE O 420.1B DOE-HDBK-1169 (9.2)
	As discussed in Table 4-3 transmittal letter SRNL-ROE-2007-00063, Attachment 4, Table 1, this evaluation criteria is NOT APPLICABLE. Per 2004-2 Ventilation System Evaluation Guidance Addendum, March 6, 2007, Caution 4 and Ventilation System Evaluation Guidance for Safety-Related and Non-Safety Related Systems, Revision 0, January 2006, Page 22 Discussion, the evaluation of seismic events is only required if the accident analysis takes credit for the active confinement ventilation system during or after the NPH event.	

Evaluation Criteria	Discussion	Reference
5 - Resistance to External Events – Natural Phenomena – Tornado/Wind		
5.1 Confinement ventilation systems should safely withstand tornado depressurization.	If the active CVS is not credited in a tornado condition there is no need to evaluate that performance and/or design attribute for the confinement ventilation system (discretionary). Also, any tornado impact on the confinement ventilation system performance will be based on the current functional requirements in the DSA.	DOE O 420.1B DOE-HDBK-1169 (9.2)
	As discussed in Table 4-3 transmittal letter SRNL-ROE-2007-00063, Attachment 4, Table 1, this evaluation criteria is NOT APPLICABLE. Per 2004-2 Ventilation System Evaluation Guidance Addendum, March 6, 2007, Caution 4 and Ventilation System Evaluation Guidance for Safety-Related and Non-Safety Related Systems, Revision 0, January 2006, Pages 22 and 23 Discussion, the evaluation of tornado and wind events is only required if the accident analysis takes credit for the active confinement ventilation system during or after the NPH event.	
5.2 Confinement ventilation systems should withstand design wind effects on system performance.	If the active CVS is not credited in a wind condition there is no need to evaluate that performance and/or design attribute for the confinement ventilation system (discretionary). Also, any wind impact on the confinement ventilation system performance will be based on the current NP analysis in the DSA.	DOE O 420.1B DOE-HDBK-1169 (9.2)
	As discussed in Table 4-3 transmittal letter SRNL-ROE-2007-00063, Attachment 4, Table 1, this evaluation criteria is NOT APPLICABLE. Per 2004-2 Ventilation System Evaluation Guidance Addendum, March 6, 2007, Caution 4 and Ventilation System Evaluation Guidance for Safety-Related and Non-Safety Related Systems, Revision 0, January 2006, Pages 22 and 23 Discussion, the evaluation of tornado and wind events is only required if the accident analysis takes credit for the active confinement ventilation system during or after the NPH event.	

Evaluation Criteria	Discussion	Reference
6 - Other NP Events (eg. flooding, precipitation)		
6.1 Confinement ventilation system should withstand other NP events considered credible in the DSA where the confinement ventilation system is credited.	If the active confinement ventilation system is not credited for this event there is no need to evaluate that performance and/or design attribute for the confinement ventilation system (discretionary). Also, any impact on the confinement ventilation system performance will be based on the current NP analysis in the DSA.	DOE O 420.1B DOE-HDBK-1169 (9.2)
	As discussed in Table 4-3 transmittal letter SRNL-ROE-2007-00063, Attachment 4, Table 1, this evaluation criteria is NOT APPLICABLE. Per 2004-2 Ventilation System Evaluation Guidance Addendum, March 6, 2007, Caution 4 and Ventilation System Evaluation Guidance for Safety-Related and Non-Safety Related Systems, Revision 0, January 2006, Page 23 Discussion, the evaluation of other NPH events is only required if the accident analysis takes credit for the active confinement ventilation system during or after the NPH event.	

Evaluation Criteria	Discussion	Reference
7 - Range Fires / Dust Storms		
7.1 Administrative controls should be established to protect confinement ventilation systems from barrier threatening events.	Ensure appropriately thought out response to external threat is defined (e.g. pre-fire plan).	DOE O 420.1B
	The Savannah River Forestry Department is responsible for fire fighting efforts in regards to wildland fires. They also have a program of controlled burns and mechanical thinning of underbrush to limit or prevent wildland fires spreading out of control. If the fire encroaches upon SRNL, the Savannah River Site Fire Department will direct extinguishing efforts. Building 773-A has a current Fire Pre Plan and has procedures to reduce confinement ventilation system air flow (originally develop for electrical system maintenance) that will minimize soot loading of the filters in the ventilation systems. Reference: AOP-06-007 Dust storms are not an issue at the Savannah River Site due to the regional climate. <u>Gap Analysis</u> No Gap. Administrative controls are sufficient to protect the confinement ventilation systems for barrier threatening events.	

Evaluation Criteria	Discussion	Reference
8 - Testability		
8.1 Design supports the periodic inspection and testing of filters and housing, and test and inspections are conducted periodically.	Ability to test for leakage per intent of N510.	DOE-HDBK-1169 (2.3.8) ASME AG-1 ASME N510
	The FHSF Sand Filter has the capabilities for in-place testing. It is Aerosol Efficiency Tested (AET) on an 18 month frequency in accordance with Appendix 51 of 2Y1/401. Aerosol is injected into a duct in Room E095 (Bldg 773-A, Sec E) and the test is conducted at the northeast corner of the FHSF Sand Filter near the fan suction. The surface of the Sand Filter bed was also inspected by Engineering and Operations personnel in August 2004. The Sand Filter was installed 1972 under Project 9S1175 and this was the first and only inspection made since initial installation. Entry to the Sand Filter building (794-A) was made through a wooden air-lock constructed at the back pressure damper located at the north end of the upper sand filter roof. No abnormalities were found. <u>Gap Analysis</u> No Gap	
8.2 Instrumentation required to support system operability is calibrated.	Credited instrumentation should have specified calibration / surveillance requirements. Non-safety instrumentation should be calibrated as necessary to support system functionality.	DOE-HDBK-1169 (2.3.8)
	The FHSF Sand Filter system has no calibration requirements in the SRNL TSR. FHSF Sand Filter system inlet pressure switches (PS-6504, -6505) and low pressure alarm switch (PAL-6009) on the north and south fans, as well as the plenum pressure gauge (PI-6010), are calibrated on a two year frequency. Other system non-safety instrumentation is calibrated only on an as-needed basis, there is no established calibration frequency. <u>Gap Analysis</u> No Gap	
8.3 Integrated system performance testing is specified and performed.	Required responses assumed in the accident analysis must be periodically confirmed including any time constraints.	DOE-HDBK-1169 (2.3.8)
	The FHSF Sand Filter system functional startup testing is performed after major maintenance events to ensure that interlocks and controls function as designed. Instrument calibrations are verified monthly during FHSF fan functional test and every 18 months during the FHSF fan low suction interlock test. See Section 0.2 (system references) for testing procedures. <u>Gap Analysis</u> No Gap	

Evaluation Criteria	Discussion	Reference
9 - Maintenance		
9.1 Filter service life program should be established.	Filter life (shelf life, service life, total life) expectancy should be determined. Consider: filter environment, maximum delta-P, radiological loading, age, and potential chemical exposure.	DOE-HDBK-1169 (3.1 & App C)
	Trending of the FHSF Sand Filter differential pressure helps to predict when the service life of a sand filter is nearing its end. However, the service life (about 15 years) of the 294-F and 294-H sand filters (replaced in 1975 and 1976 respectively) was shortened by acid attack of concrete blocks supporting the filter bed over the lateral distribution tunnels. The SRNL Sand Filter was the first filter at SRS designed to resist acid attack. Since 1974 four other sand filters have been put into service with the acid resistant design. This design has lengthened the service life of these sand filters to the point that it is difficult to predict it. However, the SRNL Sand Filter was designed in a manner to facilitate its replacement on the north side of the 794-A sand filter (see W447512). The August 2004 Sand Filter bed inspection discussed in 8.1-TY-1 showed the SRNL Sand Filter to have significant service life remaining. <u>Gap Analysis</u> No Gap	

Evaluation Criteria	Discussion	Reference
10 - Single Failure		
10.1 Failure of one component (equipment or control) shall not affect continuous operation.	Address potential failures (example failures - fan, backup power supply, switchgear).	DOE O 420.1B (Facility Safety, Chapter I, Sec. 3.b(8))
	The FHSF Sand Filter exhaust fans are redundant and are equipped with standby electrical power. Each fan is fed from a separate motor control center. The separate motor control centers are powered from a single normal power substation and a single diesel generator. The normal power substation is provided power feeds from two separate main transformers. Separate control loops are installed for each fan. The Stack Isokinetic Sampling system and the Stack Air Activity Monitoring system are independent from each other. One system will be available to pull a sample from the stack in the event that the other is off-line. <u>Gap Analysis</u> Gap Number 56: Discretionary Gap - Fan MCCs are not distributed across different D/Gs.	
10.2 Automatic backup electrical power shall be provided to all critical instruments and equipment required to operate and monitor the confinement ventilation system.	[DOE Guidance Document does not provide any specific evaluation guidance discussion for this criteria]	DOE-HDBK-1169 (2.2.7)
	In the event of a power failure, the FHSF Sand Filter fans and associated controls are provided standby power by the 792-A diesel generator. The isokinetic sampling system is provided standby power by the 792-A diesel generator. The on-line stack air activity monitoring system electronics are powered by a UPS, but their fans (located in Building 779-A) are not provided with back-up power. <u>Gap Analysis</u> Gap Number 57: Discretionary Gap - Standby power is not provided for the stack air activity monitoring (SAAM) fans.	
10.3 Backup electrical power shall be provided to all critical instruments and equipment required to operate and monitor the confinement ventilation system.	NOTE: Safety Class is addressed through previous line.	DOE-HDBK-1169 (2.2.7)
	This evaluation criteria is NOT APPLICABLE, as it is an SS-only criteria. SRNL confinement ventilation systems are evaluated to SC criteria.	

Evaluation Criteria	Discussion	Reference
11 - Other Credited Functional Requirements		
11.1 Address any specific functional requirements for the confinement ventilation system (beyond the scope of those above) credited in the DSA.	[DOE Guidance Document does not provide any specific evaluation guidance discussion for this criteria]	10 CFR 830, Subpart B
	None <u>Gap Analysis</u> No Gap	

Attachment 8 (Page 1 of 13)

Scope, Estimate and Recommendation for Gap Closure

Gap	Scope/Approach	Estimated Cost	Discussion/Recommendation
1	Install blanks in a total of 11 locations between HEPA filter banks in Sections B/C-CHEX system.	$190K to $290K (Task 16)	Recommend **closing** this gap. The B/C-CHEX HEPA filters are the primary filtration for the two highest dose events (1 & 2). Installation of the blanks will provide improved protection to the facility worker by reducing the spread of contamination within the primary and secondary confinement zone. Also see Gap #5.
2	Add automatic isolation dampers on B/C-HVAC (supply system) fan discharges at 16 locations where multiple fans discharge from a common "wind box".	$3.2M to $5.1M (Task 5)	Concern is that airborne contamination could migrate back through the supply ductwork and be discharged to tertiary confinement zone or other portions of the secondary confinement zone. Recommend **not closing** this gap. Automatic isolation dampers are already provided on the eight primary supply fans for the lab modules (secondary confinement zone) on the main floor. Closing the gap will not mitigate a dose from Low to Negligible for Events 1 and 2. The FET has recommended closing Gaps 1, 3, 4, 5, 6 and 15 as a more effective use of funds.
3	Install hard wire interlocks between B/C-CHEX, B/C-PHEX, and B/C-HVAC systems supply and exhaust fans to prevent positive ΔPs in the secondary and tertiary confinement zones during upset conditions.	$3.9M to $5.7M (Task 5)	Recommend **closing** this gap. If exhaust is lost and supply air is not shutdown, the MAR associated with Events 1, 2 and 5 will be pushed from the secondary confinement zone to the atmosphere.

Attachment 8 (Page 2 of 13)

Scope, Estimate and Recommendation for Gap Closure

Gap	Scope/Approach	Estimated Cost	Discussion/Recommendation
4	Replace existing tape-in-place HEPA filter housings for B/C CHEX and PHEX (in B/C-005) with new HEPA filter housings. Two options were investigated: Option A replaces the entire filter bank for each of the 64 lab modules with ASME AG-1 compliant redundant HEPA filter housings. Option B replaces the existing 146 tape-in-place housings with ASME AG-1 compliant HEPA filter housing and reuses the existing filter bank inlet and outlet plenums.	Option A: $37M to $57M (Task 1) Option B: $10M to $15M (Task 20)	Each option provides an improved HEPA filter seating and ductwork integrity to permit the system to be credited at the Safety Class functional classification with a Decontamination Factor (DF) of 200. This will reduce the consequences of Events 1, 2, 3 and 5 including mitigating the two Low consequence events to Negligible. Option A provides redundant flow paths to facilitate HEPA filter change-out every seven years. Based on the ability to suspend individual lab operations during filter change-out, the FET does not feel that the additional expenditure of funds is justified when compared to Option B. Option A would require five to seven years to implement. The magnitude of work would impact the ability of SRNL to perform its mission. Option B has already been implemented on a selected basis for some lab modules and could be completed in approximately 3 years. Option B would not adversely impact the ability of SRNL to perform its mission. Recommend **closing** this Gap using Option B.
5	Install blanks in a total of 11 locations between HEPA filter banks in Sections B/C-CHEX system	Cost included in Gap 1	Recommend **closing** this gap. The B/C-CHEX HEPA filters are the primary filtration for events 1 and 2. Installation of the blanks will improve the performance of in-place HEPA filter testing. Also see Gap #1.
6	Provide B/C-CHEX Fan Standby Power separation by moving power feed for one CHEX fan in both Sections B and C to a motor control center that is provided power from the 773-A D/G.	$150K to $250K (Task 6)	Recommend **closing** this gap. Closing this gap will improve reliability of the single most important primary confinement system for 773-A Sections B and C by spreading the fans across four motor control centers and two diesel generators. This will decrease the probability of Events 2 and 5 and increase the probability of mitigating Events 1, 2, 3 and 5.

Attachment 8 (Page 3 of 13)

Scope, Estimate and Recommendation for Gap Closure

Gap	Scope/Approach	Estimated Cost	Discussion/Recommendation
7	Replace inlet stainless steel (SST) Level 4 ductwork from roof penetration to Diversion fan inlets including isolation dampers and flexible connections.	$1.2M to $1.8M (Task 8)	The new ductwork configuration will eliminate the fan inlet turbulence (system effect) that is impacting fans and diversion system performance and reliability. Recommend **not closing** this gap. While closing the gap will improve the reliability of the CHEX Diversion fan system, the fans will maintain Section B or C secondary confinement zones under negative pressure based on the existing supply and exhaust interlocks and the new interlocks recommended to close Gap 3. Also the probability of this system being needed is low if Gap 4 (B/C-CHEX and PHEX HEPA filter housings) is closed.
8 9 10 11 12	Three options were investigated to close the five gaps associated the Section B/C Changeroom exhaust systems: ***Option A*** would install two (one each for Sections B & C) new exhaust skids with HEPA filtration (Gap 8), isolation dampers, redundant exhaust fans (Gap 11) and alpha stack monitor (Gap 10) connected to automatic backup electrical power (Gap 12) and full instrumentation and control to the control room (Gap 9). ***Option B*** would install two new exhaust skids with HEPA filtration, isolation damper, single fan, normal power, stack sampler and interlock with the primary confinement zone exhaust. ***Option C*** would add a low leak isolation damper on each system and interlock the fan and damper control with the primary confinement zone exhaust.	Option A $3.6M to 5.2M (Task 7) Option B $800K to $1.2M (Task 7) Option C $600K to $900K (Task 7)	Recommend **not closing** the five gaps using any of the three options. The changerooms are located in the tertiary confinement zone. Exhaust from the change room is 2% of the total ventilation for the associated primary, secondary and tertiary confinement zones. If the process events occurred with the primary confinement zone ventilation system operational, approximately 2% of the material (0.04 rem dose to the MOI) would be available for release from this location. The cost to mitigate a Negligible (<0.5 rem) release to the MOI is not justified when compared to advantages of closing Gaps 3, 4, 6 and 15.

Attachment 8 (Page 4 of 13)

Scope, Estimate and Recommendation for Gap Closure

Gap	Scope/Approach	Estimated Cost	Discussion/Recommendation
13	Provide status instrumentation and control of B/C-HVAC system supply fans in the control room.	$1.2M to $1.7M (Task 14)	The estimate is the incremental cost to close this gap concurrently with closing Gap 3 (interlocks between supply and exhaust systems). If performed as a stand alone task, the cost would be considerable higher. Recommend **not closing** this gap. The primary benefit of preventing over pressurization of secondary and tertiary confinement zone is accomplished by providing interlocks between the supply and exhaust systems (i.e. closing Gap 3 which the FET recommends). Having the ability to verify that a fan has actually shutdown and manual shutdown the fan if the interlock has failed is desirable but does not directly reduce the dose from any of the process events evaluated.
14	Install differential pressure sensors between tertiary confinement zone and atmosphere is Sections B and C and transmit signal to the control room.	$130K to $185K (Task 21)	Recommend **not closing** this gap. Closing Gap 3 (supply/exhaust interlock) will provide the necessary safety function.
15	Provide B/C-PHEX Fan standby power separation by moving power feed for one PHEX fan in both Sections B and C to a motor control center that is provided power from the 773-A D/G.	$150K to $250K (Task 6)	PHEX fans are already cross fed from different MCCs (5E and 6E). Single mode failure goes all the way back to the single Sand Filter D/G. Recommend **closing** this gap. This will improve the reliability of a primary confinement system associated with the Events 1 and 2.
16	Install hardwire interlocks between B/C-RREX Supply and Exhaust fans for B/C-001 equipment rooms and B/C-005 filter rooms.	$300K to $600K (Task 4)	Recommend **not closing** this gap. These systems serve rooms in the secondary confinement zones that do not normally have any MAR and would only mitigate Event 3. The incremental improvement in performance for a Negligible consequence event is not justified by the cost of the modifications.
17	Provide a standby fan for each of the four B/C-RREX systems (Equipment Room & Shielded Area Exhaust systems in Sections B and C) by removing the individual fans for each system and installing a redundant pair of fans sized to handle both systems in a section.	$2.0M to $3.2M (Task 9)	Recommend **not closing** this gap. These systems serve rooms in the secondary confinement zones that do not normally have any MAR and would only mitigate Event 3. The incremental improvement in reliability for a Negligible consequence event is not justified by the cost of the modifications.

Attachment 8 (Page 5 of 13)

Scope, Estimate and Recommendation for Gap Closure

Gap	Scope/Approach	Estimated Cost	Discussion/Recommendation
18	Provide B/C-RREX Fans automatic back-up power by moving the motor starters from MCC-5 to MCC-5E (2 fans) and from MCC-6 to MCC-6E (2 fans).	$300K to $500K (Task 6)	Recommend **not closing** this gap. These systems serve rooms in the secondary confinement zones that do not normally have any MAR and would only mitigate Event 3. The incremental improvement in reliability for a Negligible consequence event is not justified by the cost of the modifications.
19	Provide outlet HEPA filter ΔP instrumentation for 21 OGE gloveboxes that do not have this capability. Local gauge will require installation of half-coupling, SST tubing, isolation valves and gauge bracket.	$420Kto $630K (Task 10)	Recommend **not closing** this gap. Glovebox outlet HEPA filter ΔP instrumentation is installed on the majority of facility gloveboxes, but not in all cases. Glovebox outlet HEPA filter is not credited and will not need to be credited to mitigate any of the evaluated events. It would be more effective to provide the glovebox exhaust monitoring instrumentation (Gap 20) since this instrumentation and glovebox differential pressure can be used to determine if the glovebox outlet HEPA filter needs to be replaced due to high differential pressure.
20	Provide glovebox exhaust flow monitoring instrumentation for 26 OGE gloveboxes that do not have this capability.	$3.4M to $4.3M (Task 3)	Glovebox exhaust flow rate instrumentation is installed on a number of gloveboxes (typically for the more recent installations) expected to hold Hazard Category 2 quantities of radiological material, but not in all cases. Recommend **closing** this gap. Ensuring adequate glovebox airflow is a key preventer for two of the events including one of the events with Low consequences.
21	Install OGE standby fan autostart interlocks between the existing fan starters for both Section B and C subsystems.	$100K to $200K (Task 4)	Operator currently starts standby fan manually from the control room upon receiving a system alarm. Recommend **closing** this gap. Autostart of the standby fan in place of manual startup by the control room operator provides an automatic function that could prevent Event 1.
22	Provide OGE fan standby power separation by moving power feed for one OGE fan in both Sections B and C to a motor control center that is provided power from the 773-A D/G.	$150K to $250K (Task 6)	Recommend **closing** this gap. Improved reliability of the system could prevent Event 1 which has the highest dose to the MOI and CW.

Attachment 8 (Page 6 of 13)

Scope, Estimate and Recommendation for Gap Closure

Gap	Scope/Approach	Estimated Cost	Discussion/Recommendation
23	Replace the six B Cell Block 3rd stage HEPA filters (rated of 1000 each cfm) with HEPA filters rated for 1500 cfm Option A – Change filter model immediately Option B – Replace filter model at next schedule filter replacement	Option A $20K to $25K (Task 17) Option B $2K to $4K (Task 17)	Normal operations is for both banks of three filters to be on-line with a filter capacity of 6000 cfm vs normal operating airflow of 4500 cfm. The only time the filters operate above design airflow is during filter replacement. The HEPA filters are backed up by the Sand Filter. Recommend **closing** this gap at next schedule filter change (Option B). Closing the gap immediately will provide no dose reduction and not improve reliability.
24	Replace the six A Cell Block 2nd and 3rd stage HEPA filters (rated of 1000 each cfm) with HEPA filters rated for 1500 cfm. Option A – Change filter model immediately Option B – Replace filter model at next schedule filter replacement	Option A $25K to $30K (Task 30) Option B $2K to $4K (Task 30)	Normal operations is for all three single filter banks to be on-line for both the 2nd and 3rd stages. Each stage has a filter capacity of 3000 cfm and normal operating airflow of 3000 cfm. The only time the filters operate above design airflow is during filter replacement. The HEPA filters are backed up by the Sand Filter. Recommend **closing** this gap at next scheduled filter change (Option B). Closing the gap immediately will provide no dose reduction and not improve reliability.
25	Provide ΔP indicators for the eight HEPA filter housings associated with A Cell Block 2nd Stage HEPA filters, A Cell Block 3rd stage HEPA filters and B Cell Block 3rd Stage HEPA filters. Local gauge will require installation of half-coupling, SST tubing, isolation valves and gauge bracket.	$160K to $240K (Task 10)	Recommend **not closing** this gap. In-cell (or first stage) HEPA filters take the vast majority of material loading and are equipped with duct monitors downstream of the filters. The Cell Block 2nd and 3rd stage HEPA filters have never been replaced due to high differential pressure or failed in-place testing. They are replaced every five to seven years based on filter service life. Also, each HEPA filter flow path is equipped with low airflow alarms that would provide an alarm to the control room if filter loading occurred. If both stages of HEPA filtration leak.
26	Install electrical interlock between primary supply and exhaust systems for 773-A Section E (CE, HVAC, RREX, LHEX)	$600K to $1M (Task 18)	Recommend **closing** this gap for the primary confinement systems. Closing this gap will provide the ability to isolate the air supply and keep the primary confinement from being pressurized if the primary exhaust system were to fail during operations or an upset condition by securing the supply fans.

Attachment 8 (Page 7 of 13)

Scope, Estimate and Recommendation for Gap Closure

Gap	Scope/Approach	Estimated Cost	Discussion/Recommendation
27	Provide standby power separation for the four Cell Exhaust fans and remove the control power for each set of fans from a common transformer by: 1) Installing a new motor control center in Section E feed from the Sand Filter D/G and 2) Moving power feeds for one A Cell Block exhaust fan (MCC 11E) and one B Cell Block exhaust fan (MCC 15E) to the new motor control center	$830K to $1.2M (Tasks 6 & 13)	Recommend **closing** this gap. Improvements to the reliability of both Cell Block exhaust systems will increase the probability of preventing Event 4 and will help mitigate Events 3 and 4.
28 29 30 31 32	Three options were investigated to close the five gaps associated the Section E-HV Men's and Ladies' Changeroom exhaust systems: Option A would install two (one each for men's and one for ladies' changerooms) new exhaust skids with HEPA filtration (Gap 28), isolation dampers, redundant exhaust fans (Gap 31) and alpha stack monitor (Gap 30) all connected to automatic backup electrical power (Gap 32) with full instrumentation and control to the control room (Gap 29). Option B would install two new exhaust skids with HEPA filtration, isolation damper, single fan, normal power and interlock with the primary confinement zone exhaust. Option C would add a low leak isolation damper on the Ladies' changeroom and interlock the fan and damper control with the primary confinement zone exhaust. No modification would be made to the Men's changeroom since it is already HEPA filtered.	Option A $2.6M to 5.2M (Task 7) Option B $800K to $1.2M (Task 7) Option C $300K to $450K (Task 7)	Recommend **not closing** these five gaps using any of the three options. The changerooms are located in the tertiary confinement zone. If an upgrade system was installed, it would mitigate only a portion of Event 3 with the primary or secondary confinement ventilation systems mitigating the majority of the event. The cost to mitigate a negligible (<0.5 rem MOI and <5 rem CW) release is not justified when compared to other cost benefit of closing other gaps such as Gaps 35, 36, 37, 39, 40 and 42.

Attachment 8 (Page 8 of 13)

Scope, Estimate and Recommendation for Gap Closure

Gap	Scope/Approach	Estimated Cost	Discussion/Recommendation
33	Modify the recirculating HVAC system in the manipulator shop (E-095) by adding a HEPA filter housing and booster fan.	$215K to $320K (Task 15)	Recommend **not closing** this gap. The manipulator repair shop is part of the secondary confinement zone due to the potential for contamination on the interior surface of a stripped and externally decontaminated manipulator. There is no MAR in this portion of the secondary confinement zones and none of the evaluated events are postulated to occur in this space. The cost to mitigate a negligible release is not justified when compared to other cost benefit of closing other gaps such as Gaps 35, 36, 37, 39, 40 and 42.
34	Provide fan status and control for the three (3) E-HVAC supply fans in 773-A Section E (EP 20984, EP 20922 and EN 812-500) to the 773-A Control Room using the remote I/O Rack in 773-A Section E	$600K to $1000K (Task 31)	Recommend **not closing** this gap. Interlocks between supply and exhaust system (Gap 26 which the FET recommends closing) will mitigate dose from the events. The additional scope needed to close this gap will have no direct dose reduction.
35 36 37 39 40 42	Complete Project Y189 which consolidates five LHEX and RREX systems in Section E into one RREX system. This will replace several tape-in-place HEPA filter housings (Gaps 36 & 42), replace several HEPA filters that are currently operating at greater than their rated airflow (Gaps 35 and 38), provide redundant fans (Gap 37) and provide HEPA filter differential pressure instrumentation (Gap 40).	$2.0M to $2.3M (Task 22)	Project Y189 has been funded through design and procurement of engineering equipment. Estimate range provided is an Estimate to Complete that does not include costs to date and does include OPEX to support start-up, procedures and training for the new system. Recommend **closing** the gap by completing Project Y189. Closing the gaps would provide improved performance and reliability for the secondary confinement zone exhaust system where Event 3 is most likely to occur. Closure of this gap will provide better mitigation of a release than closing Gaps 28 thru 33.
38	Provide standby power to the new exhaust system being installed under project Y189 to replace three existing E-RREX systems and two E-LHEX systems. See Gaps 35, 36, 37, 39, 40 and 42.	$75K to $250K (Task 6)	Closure of the gap would be at lower end of cost range if Gap 27 is closed. Recommend **closing** the gap. Closing the gap would provide improved reliability for the secondary confinement zone exhaust system where Event 3 is most likely to occur. The gap should be closed concurrent with closure of Gaps 35, 36, 37, 39, 40 and 42 to provide a replacement secondary confinement system.
39	See Gap 35	Cost included in Gap 35	Recommend **closing** the gap
40	See Gap 35	Cost included in Gap 35	Recommend **closing** the gap

Attachment 8 (Page 9 of 13)

Scope, Estimate and Recommendation for Gap Closure

Gap	Scope/Approach	Estimated Cost	Discussion/Recommendation
41	Provide local and control room fan instrumentation and alarms for the E-RREX Fan Room Exhaust sub-system using the remote I/O Rack in 773-A Section E	$250K to $300K (Task 24)	The fan rooms were originally used for the first generation A and B Cell Block exhaust system first stage HEPA filter housings and exhaust fans. These systems were replaced in the mid 1970s. The majority of equipment has been removed but the rooms remain contaminated and part of the secondary confinement zone. Recommend **not closing** this gap. The rooms in the secondary confinement zone associated with this system have no Material at Risk.
42	See Gap 35	Cost included in Gap 35	Recommend **closing** the gap
43	Add a standby fan for the E-RREX Fan Room Exhaust sub-system by replacing existing fan with a skid equipped with redundant fans.	$350K to $500K (Task 25)	The fan rooms were originally used for the first generation A and B Cell Block exhaust system first stage HEPA filter housings and exhaust fans. These systems were replaced in the mid 1970s. The majority of equipment has been removed but the rooms remain contaminated and part of the secondary confinement zone. Recommend **not closing** this gap. The rooms in the secondary confinement zone associated with this system have no Material at Risk.
44	Provide standby power to the following E-RREX sub-systems: High Bay Exhaust, Lab & Storage Exhaust and Fan Room Exhaust. Fan Room Exhaust (subtask 1) would be connect the existing fan to MCC 11E. High Bay Exhaust and Lab & Storage Exhaust (subtask 2) completed as part of closing Gap 38.	Subtask 1 $150K to $300K (Task 6) Subtask 2 $0K (see gap 38)	The fan rooms were originally used for the first generation A and B Cell Block exhaust system first stage HEPA filter housings and exhaust fans. These systems were replaced in the mid 1970s. The majority of equipment has been removed but the rooms remain contaminated and part of the secondary confinement zone. Recommend **not closing** this gap. The rooms in the secondary confinement zone associated with this Fan Room exhaust system have no Material at Risk. The High Bay Exhaust and Lab & Storage Exhaust portion of the gap is already recommended to be closed as part of Gap 38.

Attachment 8 (Page 10 of 13)

Scope, Estimate and Recommendation for Gap Closure

Gap	Scope/Approach	Estimated Cost	Discussion/Recommendation
45	Provide a single ΔP indication for HEPA Filter Housing in the F-LHEX system. Local gauge will require installation of half-coupling, SST tubing, isolation valves and gauge bracket.	$20K to $30K (Task 10)	This laboratory space is only used for chemical work and from a radiological confinement stand-point the space is part of the tertiary confinement zone. If the exhaust fans fails, an existing interlock will turnoff the supply fan for the space so there is no impact on the performance of the primary, secondary or tertiary confinement zones. Recommend **not closing** this gap.
46	Provide system instrumentation and alarms for the F-LHEX system by using the remote I/O Rack in 773-A Section E	$100K to $200K (Task 26)	This laboratory space is only used for chemical work and from a radiological confinement stand-point the space is part of the tertiary confinement zone. If the exhaust fans fails, an existing interlock will turnoff the supply fan for the space so there is no impact on the performance of the primary, secondary or tertiary confinement zones. Recommend **not closing** this gap. Since the system will not mitigate any of the evaluated events, adding system instrumentation and alarms is not justified.
47	Two scopes were evaluated for closing this task: Option A – Restore abandoned stack sampler to operation and relocate sampler box to a location where it can be safely accessed during an event. Option B – Provide an on-line alpha stack monitor to the control room.	Option A $90K to $135K (Task 27) Option B $1.0M to $1.5M (Task 27)	The F-LHEX laboratory space served by this stack is only used for chemical work and from a radiological confinement stand-point is part of the tertiary confinement zone. Recommend **not closing** this gap. Only Event 3 has the potential to provide any MAR to this stack. The consequences from this event are Negligible without mitigation and the small fraction of the MAR that reached this system would be HEPA filtered. No type of radiological sampling or monitoring for this stack is justified.
48	Install standby fan autostart by interconnecting the fan start circuits with the system alarms added by closing Gap 46 and adding automatic inlet isolation dampers to the fans.	$600K to $1.0M (Task 4)	This laboratory space is only used for chemical work and from a radiological confinement stand-point the space is part of the tertiary confinement zone. If the exhaust fans fails, an existing interlock will turnoff the supply fan for the space so there is no impact on the performance of the primary, secondary or tertiary confinement zones. Recommend **not closing** this gap. Since the system will not mitigate any of the evaluated events, the increase in fan/airflow reliability is not justified.

Attachment 8 (Page 11 of 13)

Scope, Estimate and Recommendation for Gap Closure

Gap	Scope/Approach	Estimated Cost	Discussion/Recommendation
49	Move power for one of the two F-LHEX fans serving F-101/107 to MCC-21E or 22E to spread the power feed across two MCCs and two D/Gs.	$150K to $250K (Task 6)	This laboratory space is only used for chemical work and from a radiological confinement stand-point the space is part of the tertiary confinement zone. If the exhaust fans fails, an existing interlock will turnoff the supply fan for the space so there is no impact on the performance of the primary, secondary or tertiary confinement zones. Recommend **not closing** this gap. Since the system will not mitigate any of the evaluated events, the increase in power system reliability is not justified.
50	Provide differential pressure instrumentation for both CPF Cells 1 thru 3 and MSF Cells 1 thru 5 by removing spare KAPL plugs and installing new KAPL plugs with sensing tubes connected to differential pressure indicators.	$35K to $65K (Task 28)	Both sets of cells have been deinventoried and are inactive per the DSA. The SRNL Infrastructure plan states that cells will be D&D'ed and D&D planning has been initiated. Recommend **not closing** this gap. Based on the current status and future plans for the cells, the FET recommends that gap not be closed.
51	Provide glovebox outlet HEPA filter ΔP instrumentation for the four F-PHEX system gloveboxes located in F-151. Local gauge will require installation of half-coupling, SST tubing, isolation valves and gauge bracket.	$80K to $120K (Task 10)	The four gloveboxes are part of the SED facility and are inactive per the DSA. The SRNL Infrastructure plan states that cells will be D&D'ed and D&D planning has been initiated. Recommend **not closing** this gap. Based on the type events evaluated for Section F, sudden changes in HEPA filter differential pressure are unlikely. Routine glovebox differential pressure readings provide adequate indication of system performance.
52	Install differential pressure monitoring instrumentation for the 37 HEPA filter housings associated with the F-PHEX system. Local gauge will require installation of half-coupling, SST tubing, isolation valves and gauge bracket.	$740K to $1.1M (Task 10)	The majority of the filter housings are for inactive facilities per the DSA. The SRNL Infrastructure plan states these facilities will be D&D'ed. D&D planning has been initiated. Recommend **not closing** this gap. Based on the types of operations performed and events evaluated for Section F, sudden changes in HEPA filter differential pressure are unlikely. Routine system airflow readings and airflow directional surveys provide adequate indication of system performance.

Attachment 8 (Page 12 of 13)

Scope, Estimate and Recommendation for Gap Closure

Gap	Scope/Approach	Estimated Cost	Discussion/Recommendation
53	Replace exhaust fan inlet damper actuators with actuators that will fail-safe in the closed position and will have a hand wheel for manual operation.	$70K to $110K (Task 11)	The current damper actuators are double air actuated and fail in the as left condition. Due to the type of actuator currently installed, the dampers will move to a half closed position and can not be manually positioned to the full open or closed position without a full maintenance crew. Recommend **closing** this gap. This will improved the reliability of the primary confinement system that prevents or mitigates Events 1, 2, 3 and 5.
54	Replace the tape-in-place outlet HEPA filter housings for the Medical Source Facility with traditional bag-in/bag-out HEPA filter housings	$180K to $240K (Task 23)	Recommend **not closing** this gap. None of the evaluated events can occur in the Medical Source Facility since it has been de-inventoried and is inactive per the DSA. The SRNL Infrastructure plan states that cells will be D&D'ed and D&D planning has been initiated.
55	Improve F PHEX Fan standby power reliability by moving the power feed from fan #3 starter from MCC-22E to MCC-23E which is powered from a different D/G.	$75M to $125K (Task 6)	Three PHEX fans are fed from MCC-21E and 22E which are powered from 773-A D/G. Moving one PHEX fan to MCC-23E which is powered by the Sand Filter D/G removes the common mode failure. Recommend **closing** this gap. The F-PHEX system prevents or mitigates Events 1, 2, 3 and 5.
56	Provide separate automatic diesel generator feeds for the Sand Filter exhaust fans by installing a new PC-1 600 KW diesel generator system and a set of switch gear for one fan and keeping the other fan on the existing Sand Filter 600 KW diesel generator.	$650K to $1.3M (Task 29)	Based on the size of the Sand Filter fan motors (150 HP), they can not be provided automatic standby power from one of the other two D/Gs (773-A D/G @ 455 KW or 503-2A D/G @ 400KW) in the SRNL Technical Area. Recommend **closing** this gap. Operation of the sand filter fans is essential to ensure the proper operation of the B/C/F-OGE, B/C-PHEX. E-CE, E-RREX, E-LHEX and F-PHEX systems. These six systems prevent or mitigate all five of events.

Attachment 8 (Page 13 of 13)

Scope, Estimate and Recommendation for Gap Closure

Gap	Scope/Approach	Estimated Cost	Discussion/Recommendation
57	For the Sand Filter stack air activity monitoring (SAAM) fans, provided standby power from the Sand Filter D/G.	$500K to $750K (Task 12)	Two alternatives were considered to close the gap, providing automatic D/G power to the existing SAAM fans at 779-A or installing new dedicated SAAM fans connected to the D/G at the Sand Filter stack. They are both bounded by the cost range provided. The new fans would be in the lower end of the initial cost range but have a higher life cycle cost due to the additional components that would need to be maintained. All air to the Sand Filter is HEPA filtered before being discharged to the Sand Filter inlet duct. The Sand Filter inlet is monitored by a monitoring system that is provided with standby power. The Sand Filter stack is equipped with a sampling system that is provided standby power. Only the stack monitoring system to the control room would be impacted upon a loss of normal power. Recommend **not closing** this gap. The SAAM system does not prevent or directly mitigate any of the five events. For the system to indirectly mitigate any of the events, three simultaneous events/failures (process event that damages HEPA filtration, failure of normal power and break through of the sand filter bed) need to occur to obtain any benefit.
58	Rewire both the A and B Cell Block exhaust system controls to support fans being supplied power from multiple motor control centers.	$390K to $550K Task 19	Recommend to Close Gap

Attachment 9 (Page 1 of 5)

Cross-Walk of Gaps Recommended for Closure that would Reduce the Probability and/or Consequences of Events Evaluated

Event #1: **Explosion – Glovebox Overpressurization**
Locations: **B, C and F**
Unmitigated Dose: **CW 9.6 rem, MOI 1.9 rem**

Sections	Prevent	Mitigate
B/C	Gap 20 – Add glovebox flow instrumentation Gap 21- Add OGE standby fan auto start Gaps 22 and 56 - Improve reliability of exhaust fans (OGE and FHSF) by spreading standby power across two D/Gs	Gap 3 - Interlock between supply and exhaust (CHEX, PHEX, HVAC) Gap 4 – Improve reliability of primary/secondary confinement exhaust (CHEX and PHEX) HEPA filtration Gaps 6, 15 and 56 - Improve reliability of exhaust fans (CHEX, PHEX and FHSF) by spreading standby power across two D/Gs
F	Gap 20 – Add glovebox flow instrumentation Gap 21- Add OGE standby fan auto start capability Gaps 22 and 56 - Improve reliability of exhaust fans (OGE and FHSF) by spreading standby power across two D/Gs	Gap 53 - Improve reliability of exhaust fans (PHEX) by changing failure mode of fan inlet dampers Gaps 55 and 56 - Improve reliability of exhaust fans (PHEX and FHSF) by spreading standby power across two D/Gs

Attachment 9 (Page 2 of 5)

Cross-Walk of Gaps Recommended for Closure that would Reduce the Probability and/or Consequences of Events Evaluated

Event #2: **Explosion – Accumulation of Distributed Flammable Gas with no consequential fire**
Locations: **B, C and F**
Unmitigated Dose: **CW 8.57 rem, MOI 1.68 rem**

Sections	Prevent	Mitigate
B/C	Gap 6 - Improve reliability of exhaust fans (CHEX) by spreading standby power across two D/Gs	Gap 3 - Interlock between supply and exhaust (CHEX, PHEX, HVAC) Gap 4 - Improve reliability of primary/secondary confinement exhaust (CHEX and PHEX) HEPA filtration Gaps 6, 15 and 56 - Improve reliability of exhaust fans (CHEX, PHEX and FHSF) by spreading standby power across two D/Gs
F	Gap 53 - Improve reliability of exhaust fans (PHEX) by correcting failure mode of fan inlet dampers Gaps 55 and 56 - Improve reliability of exhaust fans (PHEX and FHSF) by spreading standby power across two D/Gs	Gap 53 - Improve reliability of exhaust fans (PHEX) by correcting failure mode of fan inlet dampers Gaps 55 and 56 - Improve reliability of exhaust fans (PHEX and FHSF) by spreading standby power across two D/Gs

Attachment 9 (Page 3 of 5)

Cross-Walk of Gaps Recommended for Closure that would Reduce the Probability and/or Consequences of Events Evaluated

Event #3: **Drop / Spill**
Locations: **B, C, E and F**
Unmitigated Dose: **CW 1.5 rem, MOI 0.31 rem**

Sections	Prevent	Mitigate
B/C	None	Gap 3 - Interlock between supply and exhaust (CHEX, PHEX and HVAC) Gap 4 - Improve reliability of primary/secondary confinement exhaust (CHEX and PHEX) HEPA filtration Gaps 6, 15 and 56 - Improve reliability of exhaust fans (CHEX, PHEX and FHSF) by spreading standby power across two D/Gs
E	None	Gap 26 - Interlock between supply and exhaust (CE, LHEX, RREX and HVAC) Gap 27 – Improve reliability of exhaust fans (CE) by spreading standby power across two D/Gs. Gap 58 – Improve reliability of exhaust fans (CE) by providing independent control transformers Gaps 35, 36, 37, 38, 39, 40 and 42 – Improve performance and reliability of the secondary confinement zone exhaust systems (LHEX and RREX)
F	None	Gap 53 - Improve reliability of exhaust fans (PHEX) by correcting failure mode of fan inlet dampers Gaps 55 and 56 - Improve reliability of exhaust fans (PHEX and FHSF) by spreading standby power across two D/Gs

Attachment 9 (Page 4 of 5)

Cross-Walk of Gaps Recommended for Closure that would Reduce the Probability and/or Consequences of Events Evaluated

Event #4: **Process Explosion – Unstable Lab Chemical or Accumulation of Process Flammable Gas or VOCs with no consequential fire**
Location: **E**
Unmitigated Dose: **CW 1.5 rem, MOI 0.31 rem**

Sections	Prevent	Mitigate
E	Gap 27 – Improve reliability of exhaust fans (CE) by spreading standby power across two D/Gs Gap 56 - Improve reliability of exhaust fans (FHSF) by spreading standby power across two D/Gs Gap 58 – Improve reliability of exhaust fans (CE) by providing independent control transformer	Gap 26 - Interlock between supply and exhaust (CE, LHEX, RREX and HVAC) Gap 27 – Improve reliability of exhaust fans (CE) by spreading standby power across two D/Gs Gap 56 - Improve reliability of exhaust fans (FHSF) by spreading standby power across two D/Gs Gap 58 – Improve reliability of exhaust fans (CE) by providing independent control transformer

Attachment 9 (Page 5 of 5)

Cross-Walk of Gaps Recommended for Closure that would Reduce the Probability and/or Consequences of Events Evaluated

Event #5: **Process Explosion – Unstable Lab Chemical or Accumulation of Process Flammable Gas or VOCs with no consequential fire**
Locations: **B, C and F**
Unmitigated Dose: **CW 1.1 rem, MOI 0.21 rem**

Sections	Prevent	Mitigate
B/C	Gap 20 – Add glovebox airflow instrumentation Gap 21- Add OGE standby fan auto start capability Gaps 6, 15, 22 and 56 - Improve reliability of exhaust fans (CHEX, PHEX, OGE & FHSF) by spreading standby power across two D/Gs	Gap 1 – Minimize spread of contamination between lab modules (CHEX) Gap 3 - Interlock between Supply and Exhaust (CHEX, PHEX and HVAC) Gap 4 - Improve reliability of primary/secondary confinement exhaust (CHEX and PHEX) HEPA filtration Gaps 6, 15 and 56 - Improve reliability of exhaust fans (CHEX, PHEX & FHSF) by spreading standby power across two D/Gs
F	Gap 20 – Add glovebox airflow instrumentation Gap 21- Add OGE standby fan auto start capability Gap 53 - Improve reliability of exhaust fans (PHEX) by failure mode of fan inlet dampers Gaps 55 and 56 - Improve reliability of exhaust fans (PHEX and FHSF) by spreading standby power across two D/Gs	Gap 53 - Improve reliability of exhaust fans (PHEX) by correcting failure mode of fan inlet dampers Gaps 55 and 56 - Improve reliability of exhaust fans (PHEX and FHSF) by spreading standby power across two D/Gs

Attachment 10 (Page 1 of 5)

FET Composition & Biographical Sketches

J. Scott MacMurray – WSRC SRNL FET Lead

Scott MacMurray is a Principal Engineer with WSRC and serves as the Chair of the WSRC Ventilation and Filtration Technical Committee and as a member of the DNFSB 2004-2 Site Evaluation Team.

Mr. MacMurray has 20 years of experience at the Savannah River Site in the areas of Design, Facility Engineering, Safety Documentation, Operations, Maintenance and Environmental Compliance in assignments at SRNL, B Area and F Area. Prior responsibilities included serving as the WSRC HEPA Filter Testing Cognizant Technical Function, Project Design Authority for replacement of various Safety Significant Ventilation Systems at SRNL, Project Design Authority for the Regulatory Monitoring and Bioassay Laboratory, SRNL Design Authority Engineering Group Lead, SRNL Operations Manager, SRNL Control Room Supervisor and SRNL Shift Technical Engineer.

Prior to SRS, Mr. MacMurray had 3 years of chemical laboratory facility engineering experience. He is a Corresponding Member of ASHRAE Technical Committees 9.10 Laboratory Systems, 9.2 Industrial Air Conditioning and 9.2 Nuclear Subcommittee. He holds a BS degree in Mechanical Engineering from Drexel University.

John A. Smartt – DOE Safety System Oversite

John Smartt is a nuclear engineer with DOE Savannah River Operations Office in the Nuclear Material Engineering Division. He currently leads DOE review and assessment teams for all SRNL safety basis changes and issues, and authors Safety Evaluation Reports to document the basis for DOE approval. He formerly served as DOE Alternate Site Lead and Safety Basis Representative on the DNFSB 2004-2 Site Evaluation Team.

Mr. Smartt has 16 years of nuclear facility safety experience at the Savannah River Site including work in contractor oversight from both site and facility perspectives, in complex-wide and site-wide policy and procedure formation, and in field implementation assessment.

Prior to DOE, Mr. Smartt had 8 years of commercial nuclear power experience working at Tennessee Valley Authority's Sequoyah Nuclear Plant, writing and performing startup and post-modification tests and executing system engineering duties. He holds a BS degree in Engineering, specializing in Electrical Instrumentation and Controls, from the University of Tennessee at Chattanooga.

Attachment 10 (Page 2 of 5)

FET Composition & Biographical Sketches

Charles H. Neill, Jr. – WSRC

Charlie Neill is a Principal Engineer with WSRC in the Savannah River National Laboratory (SRNL) Facility Engineering group. He is currently the lead Design Authority Engineer (DAE) for several key process ventilation systems. He has been a SRNL DAE for 14 years, specializing in all aspects of fume hoods, HEPA filters, air balance and configuration management. He is currently on the Site WSRC Ventilation and Filtration Technical Committee.

Mr. Neill has 25 years of experience at the Savannah River Site (SRS) in the areas of Facility, Systems and Power Engineering. He has worked in the Reactor buildings and Powerhouses in P, L, K and C Areas, in addition to his current assignment in the SRNL. Besides having worked extensively on a computer code to model the cooling water feed system, reaching from the Savannah River and Par Pond pumphouses to the reactor area storage basins, Charlie was the Lead System Engineer on a backup system to the control computer reactor monitoring and shutdown system that injected a gadolinium (reactor poison) solution into the reactor core.

Prior to SRS, Mr. Neill spent time at DuPont's Florence (SC) Mylar plant where he played a major role in the startup of two 70,000 pph pulverized coal-fired boilers, DuPont's Kinston (NC) Dacron plant where he worked in the R&D group to improve yarn uniformity, including one patent investigation for spun-like Dacron yarn and Houston (TX) Fluor Engineers and Constructors office specializing in insulation and coatings in their Piping Department for Saudi Arabian gas and oil separation plants.

Mr. Neill has his Engineer in Training (EIT) certificates from both Alabama and Texas. Charlie has a BSME from Auburn University (AU) where he specialized in the thermal sciences and a MSME from North Carolina State University (NCSU) where he specialized in solar storage.

Marcus L. Lowe – WSRC

Mark Lowe is a Principal Engineer with the SRNL Design Authority group. He has lead DA responsibility for several process areas for the SRNL facility including process ventilation systems. He has been a laboratory systems DA engineer for 12 years.

Earlier Mr. Lowe served for 6 years at SRS as a mechanical discipline design engineer for Bechtel Savannah River, Inc. (BSRI) in the Engineering & Projects Division for Reactor Division projects and laboratory small projects.

Prior to SRS service, Mr. Lowe was assigned for 14 years as an engineer in the commercial nuclear power industry at three nuclear power plants. Duties included construction engineer, startup engineer and maintenance engineer. Mr. Lowe is a registered professional engineer (Inactive) in the state of Mississippi. Mark has a BS degree from the U.S. Coast Guard Academy.

Attachment 10 (Page 3 of 5)

FET Composition & Biographical Sketches

Roger M. White – WSRC

Roger White is a Principal Engineer in the Engineering & Technology department of the Soil & Groundwater Closure Projects organization. He is currently the Design Authority for several Waste Sites in the A/M-Area of SRS supporting ongoing remedial activities as well as developing new remedial applications through the established RCRA and CERCLA documentation processes.

Mr. White has 15 years of experience at the Savannah River Site in areas of research, design, testing, and operation of site utilities and environmental remediation technologies. Mr. White has served as a Liaison Engineer in Site Utilities and as an Environmental Engineer in the Savannah River Technology Center (now SRNL) and in Soil & Groundwater Closure Projects. Mr. White has been a key contributor to the successful development and application of airlift recirculation well technology at SRS and in the expansion of active and passive soil vapor extraction technologies.

Prior to working at SRS, Mr. White spent 20 years in private industry as a mechanical and process engineer designing and installing production equipment and processes. Functions included research and development, corporate engineering in support of a network of nationwide manufacturing facilities, and plant engineering at specific locations. He has a B.S. degree in Mechanical Engineering from the Pennsylvania State University, an M.E. degree in Environmental Engineering from the University of South Carolina, and an M.B.A. from Augusta State University. Mr. White is a registered professional engineer in the state of Georgia.

John R. Schaber - WSRC

John Schaber is a Principal Engineer with WSRC who has worked in the Nonproliferation Technology Group at SRNL since mid October 2006. Previously, he worked as an Export Control and High Risk Reviewer for the WSRC Asset Management Group for six years. Other assignments at SRS have included such positions as a Project DA engineer and as a project manager for F&H Area nuclear facilities responsible for implementing numerous process upgrades and engineered equipment replacements. During this period, he served as the FA01 design SME for two years evaluating project compliance and assigning self-assessments for Separations Engineering. He also held positions of technical and process engineer for FB-Line during facility restart.

Mr. Schaber has nearly 19 years experience at the Savannah River Site with extensive technical and field experience in fabrication of engineered process equipment with tight dimensional tolerances, remote technology, cranes, switchgears, piping and chilled water systems, ventilation & containment modifications, installation and testing at SRS nuclear facilities. He served five years as a commissioned officer in the USN Nuclear Propulsion Program and has a B.Sc. degree in Chemical & Petroleum Refining Engineering from the Colorado School of Mines.

Attachment 10 (Page 4 of 5)

FET Composition & Biographical Sketches

Srikant Mehta - WSMS

Srikant Mehta is currently a Project Manager with Washington Safety Management Solutions, LLC. In this role he is responsible for the management of a Documented Safety Analysis Upgrade project for Washington TRU Solutions, LLC, and the Final Safety Analysis Report development for the Combined Operating License Application for two Luminant (a division of TXU Corporation) nuclear power plants (Comanche Peak units 3 & 4). In addition to his project responsibilities, he serves as a member of the DNFSB 2004-2 Facility Evaluation Team for SRNL at SRS.

Mr. Mehta, has over 20 years of project management and nuclear safety experience at commercial nuclear power plants and DOE materials production/waste management and disposal facilities at SRS. His expertise spans through the areas of project management, DSA/FSAR development and management, regulatory/licensing programs, safety analysis (transient and severe accident), Integrated Safety Management implementation, safety-in-design implementation, and operations support. Recent assignments completed by Mr. Mehta include the Advanced Fuel Cycle Facility, the Modern Pit Facility, 3013 Container Storage and Surveillance Capability project, and multiple Liquid Radioactive Waste treatment facilities/projects.

Mr. Mehta holds a PMP certification from the Project Management Institute in addition to a Masters degree in Nuclear Engineering from Iowa State University, and, a Bachelors degree in Metallurgical Engineering from the Indian Institute of Technology, Kanpur, India.

Jerry A. Clements - WSMS

Jerry Clements is a nuclear engineering consultant with ACTS of SC, Inc., on assignment to SRNL/Research Operations Department/Laboratory Services Engineering as the Lead Engineer for SRNL Safety Documentation.

Mr. Clements has 16 years of experience in the commercial nuclear industry and another 17 years experience at the Savannah River Site in the areas of design, engineering, safety analysis and environmental compliance. At SRNL, Mr. Clements has had assignments as the Bechtel Savannah River, Inc. (BSRI) Chief Nuclear Engineer, the BSRI Project Engineer for SRNL Division Managed Modifications, and (for the past 11 years) the Lead Engineer for SRNL Safety Documentation. Prior Bechtel assignments included Design Project Engineer for the TVA Browns Ferry No. 2 Restart, Project Engineer/Project Manager (Acting) for Engineering Support to Commonwealth Edison Company nuclear projects, and Nuclear Systems Supervisor for design support to Consumers Power Company nuclear projects.

Mr. Clements represents SRNL on the SRS Authorization Basis Steering Committee, the Unreviewed Safety Question (USQ) Working Group, and the Nuclear Criticality Safety Review Committee. He is also a member of the SRNL Facility Operations Safety Committee and the Criticality / Accountability Review Committee.

Attachment 10 (Page 5 of 5)

FET Composition & Biographical Sketches

B. Ronald (Ron) Moncrief – WSRC

Ron Moncrief is Senior Technical Advisor in the M&O Engineering organization. He is currently is an SRS subject matter expert for H&V and Sand filters. He serves as Vice Chairman of the SRS Ventilation and Filtration Technical Committee and contributed to the development of SRS Standard 15889, Confinement Ventilation Systems Design Criteria.

Mr. Moncrief has over 40 years of engineering experience at SRS. His experience includes mechanical design, project management and all aspects of H&V engineering.

Mr. Moncrief has a Bachelor of Mechanical Engineering form the Georgia Institute of Technology. He also serves as Secretary and voting member of the Nuclear Subcommittee of the Industrial Air Conditioning Technical Committee TC 9.2 in the American Society of Heating Refrigeration and Air Conditioning Engineers (ASHRAE) and contributed to the ASHRAE publication, HVAC Design Guide for DOE Nuclear Facilities. He also serves as Secretary of the Instruments and Measurement Technical Committee TC 1.2 in ASHRAE.

Robert Gschwendner – WSRC

Robert Gschwendner is a Senior QA Engineer A in the Technical and Quality Services department of the WSRC Liquid Waste Organization. He currently serves as a Quality Engineer for the Receiving Inspection Group and as the WSRC Level III QC Inspector Certifying Authority for the Mechanical discipline.

Mr. Gschwendner has 19 years of experience at the Savannah River Site in the areas of Quality Assurance, Quality Control, and oversight of Maintenance, Operations, Engineering and Waste Certification activities. Prior facility assignments include P, L and K Reactors, H Tank Farm, Spent Fuel Programs, RBOF, H Canyon and HB Line. Prior responsibilities include serving as facility Quality Engineer and FOSC QA representative for various facilities, serving as Spent Fuel Programs Alternate Technology Program DOE/RW-0333P QA Program Engineer, and performing QA reviews and oversight of design, construction and startup activities for various projects at K Reactor, H Tank Farm and H Canyon, including the HEU Blenddown Project.

Prior to working at SRS, Mr. Gschwendner served for 7 years in the US Navy Nuclear Submarine program. His various assignments included serving as ship's Reactor Refueling Officer, qualification as Ship's Engineering Officer and serving as a Staff Instructor and Maintenance Officer at a Nuclear Prototype Training Unit. Mr. Gschwendner has a BS degree in Engineering Science from the State University of New York (SUNY) at Stony Brook.