Attachment 1

The Path Ahead to Improve the Nuclear Safety Basis Process At Sandia National Laboratories (SNL)

Submitted to the
Defense Nuclear Facilities Safety Board

January 24, 2005

By

Sandia National Laboratories
Albuquerque, New Mexico

Executive Summary

This report is submitted in response to a September 27, 2004, letter from the Defense Nuclear Facilities Safety Board (DNFSB) to the Administrator, National Nuclear Security Administration (NNSA) addressing safety basis issues raised as a result of a DNFSB review of the Auxiliary Hot Cell Facility (AHCF) at the Sandia National Laboratories (SNL) in Albuquerque, NM, performed in August 2004. In that letter, the DNFSB expressed concerns regarding the adequacy of safety bases currently in use for nuclear facilities at SNL and requested a report that addressed the adequacy of current safety bases along with the actions to be taken to ensure more effective closure of safety bases comments and adequate draft safety bases.

SNL has taken the insights provided by the DNFSB as an opportunity for a review of SNL safety basis processes. As a result, SNL:

- Understands and accepts the issues raised by the DNFSB including the Board's concern related to fundamental underlying issues with SNL safety bases;
- Identified the underlying causes; and
- Implemented the initial phases of a comprehensive Safety Basis Improvement Project.

This report discusses the SNL response to issues raised by the DNFSB and subsequent DOE and SNL reviews. This report focuses on near-term improvement actions, discusses the initial scope of longer-term actions, and identifies compensatory actions being taken, pending full implementation of the overall plan.

Key elements of the SNL Safety Basis Improvement Project, along with each of the three areas of DNFSB concern addressed, are:

SNL Actions	DNFSB Areas of Concern		
	Adequacy of Current Safety Bases	**More Effective Closure of Safety Bases Comments**	**Ensuring Adequate Safety Bases are Submitted**
Completing safety basis reviews of reactor facilities before commencing operations	X		
Completing safety basis reviews of non-reactor nuclear facilities	X		
Refocusing safety basis activities on near-term mission-critical areas	X		
Application of more and better-trained personnel to safety basis activities	X	X	X
Enhanced corporate role in safety basis development and approval	X	X	X
Aligning staff understanding to the goals of the Safety Basis Improvement Project	X	X	X

Table of Contents

1. Introduction 1
1.1 Background 1
1.2 Action Plan in Response to DNFSB Letter 1
1.3 Programmatic Impact on SNL Nuclear Facilities 2
2. Adequacy of Safety Bases for Currently Operating Facilities 4
2.1 Criteria for Assessing Safety Basis Adequacy 4
2.2 Reviews to Assess Safety Basis Adequacy 5
2.2.1 GIF and MNF Safety Bases 5
2.2.2 ACRR and SPR Safety Bases 5
2.3 Reviews of Safety Basis Processes 6
2.4 Root Cause Analysis 7
2.5 Compensatory Measures to be Applied During Corrective Action Process 7
2.6 Remaining Open Issues 11
2.6.1 The Site Boundary Issue 11
2.6.2 Safety Class Versus Safety Significant Implications 12
2.7 Explicit Response to DNFSB Comments on AHCF Safety Basis 12
3. Actions to Ensure Adequacy of Future Safety Bases 14
3.1 Enhancement of SNL Corporate Role in Safety Bases 14
3.2 Safety Basis Improvement Project 15
3.2.1 Safety Basis Development and Review Process Improvements 16
3.2.2 Personnel Education and Training 17
3.2.3 Establishment of an Independent Nuclear Safety Board (INSB) 17
3.2.4 SNL Nuclear Facility Safety Committee (NFSC) Improvements 18
4. Task Summary 19
5. Conclusion 21

List of Attachments

A. Safety Basis Adequacy Verification Criteria
B. Nuclear Safety Basis Root Cause Analysis
C. Site Boundary Considerations
D. Issues and Considerations Involved with the Transition of Selected ACRR Structures, Systems, and Components to a Safety Class Status

1. Introduction

1.1 Background

In August 2004, the staff of the Defense Nuclear Facilities Safety Board (DNFSB or the Board) reviewed the SNL Auxiliary Hot Cell Facility (AHCF) safety basis (SB). The AHCF consists of a shielded hot cell, a permanent shield wall, floor silos, a walk-in fume hood, and associated equipment such as cranes, remote manipulators, a ventilation system, and radiation and video monitoring systems. It is located entirely within a pre-existing building inside SNL's Technical Area V (TA-V) in Albuquerque, NM. The AHCF's purpose is to facilitate characterization and repackaging for offsite disposal nuclear materials which have been determined to have no defined use.

The Board concluded that the approved safety basis for the AHCF did not provide assurance that the operational hazards have been adequately analyzed and controlled. Because of the fundamental nature of the deficiencies identified in the AHCF review, the Board also expressed concern regarding the other currently approved safety bases at SNL. Therefore, the DNFSB requested a report and briefing that addressed the following areas:

- The adequacy of safety bases for each currently operating nuclear facility at SNL;
- Actions to be taken to ensure more effective closure of comments from future safety basis review teams; and
- Actions to be taken to ensure that adequate draft safety bases are submitted by the SNL contractor in the future.

This report and a briefing by SNL to the DNFSB scheduled for January 24, 2005, constitute SNL's response to the Board's request and includes near-term, interim, and long-term corrective actions.

1.2 Action Plan in Response to DNFSB Letter

Immediately upon receipt of the DNFSB letter, SNL took action to address the specific DNSFB staff concerns regarding the AHCF, as well as the other questions raised. Immediate corrective actions were initiated (e.g., removal of the natural gas line from AHCF, removal of combustible material from the mid-bay adjacent to the AHCF) to correct some of the specific deficiencies noted by the DNFSB. Additional action has been and is being taken to address the exclusion boundary issue, and to rework the AHCF Documented Safety Analysis (DSA)/Technical Safety Requirements (TSR) in order to correct the deficiencies noted.

Following in-depth reviews to gain a full understanding of the DNFSB issues and concerns, a plan was formulated to assure the continued safe operation of the SNL nuclear facilities, to address the identified concerns, and to improve the SNL Safety Basis process. Sandia's immediate action plan includes:

- Halting nuclear facility restart activities, adjusting schedules, and reallocating resources
- Performing reviews of the Safety Bases for:
  - Annular Core Research Reactor (ACRR) and Sandia Pulsed Reactor (SPR): independent Safety Basis reviews prior to restart

    - Gamma Irradiation Facility (GIF) and Manzano Nuclear Material Storage Facility (MNF): Safety Basis self-assessments using same criteria as independent reviews
- Establishing a comprehensive, phased approach to improve the Safety Basis, referred to in this report as the Safety Basis Improvement Project
- Implementing, as necessary, compensatory measures for interim operation of selected SNL nuclear facilities
- Resolving remaining DNFSB identified issues including
    - Exclusion boundary/emergency management
    - Safety class designation implications
    - Seismic and fire evaluations
    - Aircraft accident footprint
    - Hazard analysis processes

1.3 Programmatic Impact on SNL Nuclear Facilities

While the SNL personnel working safety basis issues are competent and dedicated, there were an insufficient number to perform to the required workload with the formality and rigor required. This was evidenced by multiple persons being "dual-hatted" (some multiple times), serving a number of roles within the safety basis process and, thus, reducing the effectiveness of peer review and management oversight. SNL has concluded that to achieve the goals of the Safety Basis Improvement Project (described in Section 3.2) existing resources would have to be focused on mission critical programs and additional personnel familiar with safety basis work would be required to support the corporate Safety Bases Department and most importantly in TA-V.

In order to make additional resources available to complete the development and implementation of the Safety Basis Improvement Project in a timely manner and to facilitate safety basis activities for mission critical programs, SNL chose to make significant changes in program planning.

- The planned operations of the 7% Critical Experiment Program were deferred to a later date. All activities associated with this experiment program were stopped.
- AHCF restart activities have also been reprioritized to permit redeployment of key resources to mission critical programs while continuing to improve the safety basis process for AHCF. This resulted in a phased approach leading to startup of the AHCF by December 2005.

These actions freed up personnel for GIF and MNF safety bases self-assessments and safety basis preparation for the reactor facilities, and permitted management attention on safety basis oversight and reactor restart activities. Also, additional contractor personnel have been applied to the ACRR and SPR safety bases reviews to ensure safety bases adequacy.

A number of issues associated with AHCF were resolved prior to the shifting of resources. Several fire protection issues have been resolved, including removal of the natural gas line that was piped through the highbay. Penetrations in the wall between the highbay and the mid-bay have been filled, and the connecting door has been replaced to ensure an adequate fire barrier is in place.

A detailed campaign planning process for the AHCF has been initiated, and the results of this effort have been used as an input into the revised hazards analysis. Clarification of the radiological material inventory (form and quantity) and the processes applied to the materials has been made in Chapter 2 of the updated AHCF DSA. The revised Chapter 2 and the draft hazards analysis have been submitted to NNSA/SSO as the 30% completion milestone.

Reviews of the radiological and contamination control processes planned for the facility have begun. Additional administrative and system controls are being evaluated, and any changes will be reflected in the final submittal of the revised AHCF DSA.

2. Adequacy of Safety Bases for Currently Operating Facilities

To ensure the adequacy, and where necessary, the improvement of safety bases for each nuclear facility, SNL is conducting a near-term evaluation of the safety bases of all nuclear facilities. The evaluation for the Annular Core Research Reactor (ACRR), Sandia Pulsed Reactor (SPR) and the Auxiliary Hot Cell Facility (AHCF) will be performed before commencing future operations. The Manzano Nuclear Material Storage Facility (MNF) and Technical Area V Gamma Irradiation Facility (GIF) will continue operations (stationary storage of material and long-term steady state irradiation of benign materials such as semiconductors) because internal self-assessments, and the DOE Independent Evaluation Team (IET) review of their safety bases has been completed and their safety bases documentation were assessed to be adequate for continued operation. Improvements in hazard analyses, formality and oversight/management involvement in the Safety Basis processes will be applied to MNF and GIF in future revisions to their Safety Basis documentation.

2.1 Criteria for Assessing Safety Basis Adequacy

The review of the adequacy of the safety bases is being completed using a tailored safety basis review process. The development of this process began with the translation of the issues raised by the AHCF DNFSB review into safety basis review criteria. As these were expanded into review criteria by SNL, a number of logically related issues presented themselves resulting in additional areas for review. In the end, a total of ~60 review criteria were developed. These topics were then correlated to the appropriate Integrated Safety Management System (ISMS) Core Functions and generalized into clear review criteria. The foundation of this evaluation process is summarized in Table 1.

Table 1. Relationship of Safety Basis Adequacy Criteria to ISMS Principles.

Major Element	Sub-Element	ISMS Core Function
A	Adequacy of Hazards Identification	2- Identify & Analyze Hazards 4- Perform Work
B	Adequacy of Hazards Analysis	2- Identify & Analyze Hazards 4 – Perform Work
C	Adequacy of Controls Development & Implementation	3-Develop & Implement Hazard Controls
D	Adequacy of Feedback & Continuous Improvement	5-Improve Process

The majority of the Board's concerns involved ISMS Core Function 2 (Identify and Analyze Hazards) and Core Function 3 (Develop and Implement Hazard Controls). There were also Board concerns regarding compliance with safety basis development requirements. These concerns can be viewed as the safety analysis analogy to field compliance, which is usually the context of ISMS Core Function 4 (Perform Work within Controls). Additionally, some of the Board's concerns involved ISMS Core Function 5 (Feedback and Continuous Improvement). Therefore, the breadth of the Board's concerns encompasses four of the five ISMS Core Functions.

Using the approach described above, SNL prepared a set of "Safety Basis Adequacy Verification Criteria" which is being used as an aid in assessing the health of its DSAs. The criteria are

provided in Attachment A as part of a corporate process requirements document. A review against these criteria will determine if issues noted with the Auxiliary Hot Cell Facility were indicators of pervasive underlying systemic weaknesses and/or other inadequacies in the Safety Basis approach used for all SNL nuclear facilities.

2.2 Reviews to Assess Safety Basis Adequacy

Based on a facility prioritization, each DSA is being reviewed against the set of criteria described above. The purpose of these reviews is to evaluate the adequacy of the SNL Safety Basis process and the Safety Basis documentation for SNL nuclear facilities. The reviews are being conducted by an independent group of outside experts, assisted by senior SNL staff. Other assessments were conducted by an independent group of experts in radiation protection selected by SNL, and a Sandia Site Office (SSO)-sponsored safety basis Independent Evaluation Team (IET). Results of these reviews are being used to develop a corrective action plan for long term Safety Basis improvement, implement compensatory measures (as necessary) to increase the safety margin for interim operation, and to evaluate the accuracy and adequacy of hazard categorizations.

2.2.1 GIF and MNF Safety Bases

Internal reviews of GIF and MNF were conducted by both SSO and SNL. In addition an Independent Evaluation Team (IET) was commissioned by SSO to review the TA-V facilities. Their report provided the overall conclusion that the existing GIF Documented Safety Analysis (DSA) met the objectives of the review. The report provides the following statement: "In summary, GIF operations do not pose undue risk to the workers and the public. A limited review of the draft revised DSA and Technical Safety Requirements (TSRs) indicated a greater level of rigor and detail in demonstrating the safety of the GIF, compared to the approved Safety Analysis Report (SAR) and (TSRs)."

With respect to the MNF, the overall conclusion from the IET report is that the existing MNF DSA meets the objectives of the review. The report provides the following summary: "The objective has been met. The operations of the MNF do not pose an undue near-term risk to the public or workers…" Furthermore, the report states: "The primary strength of MNF operation is the robustness of the facilities and the relatively small quantities of wastes envisioned for storage."

Based on the observations of the IET, SSO, and SNL reviews, the GIF and MNF safety bases are adequate to continue operation of these facilities, and SNL intends to continue GIF and MNF operations. Insights from the Safety Basis Improvement Project (see Section 3.2) which may further improve the GIF and MNF safety bases will be implemented during the annual safety basis review cycle for each facility.

2.2.2 ACRR and SPR Safety Bases

The Independent Evaluation Team (IET) also reviewed the Annular Core Research Reactor (ACRR) Facility and Sandia Pulsed Reactor (SPR) Facility safety bases. In addition, independent reviews of these safety bases, commissioned by SNL, are near completion. The annual update of the ACRR and SPR safety bases were near the end of the NNSA review and approval process while these independent reviews were being performed.

No issues have been identified which would halt the issuance of a Safety Evaluation Report (SER) for the ACRR DSA and TSR, since the site boundary issue identified by the DNFSB is being addressed via the SER processes for ACRR and SPR. Thus, the ACRR SER is anticipated to be issued by January 31, and compensatory measures (see Section 2.5) will be implemented at the ACRR until the site boundary issue is resolved (see Section 2.6.1). The readiness reviews for the ACRR restart will verify the implementation of the compensatory measures prior to restarting the ACRR.

Likewise, no issues with the SPR safety bases have been identified which would halt the issuance of a SER for the SPR DSA and TSR, with appropriate compensatory measures. Following the issuance of a SER for the SPR DSA and TSR (anticipated in April 2005), an Operational Readiness Review (ORR) will be conducted before the SPR is restarted. The ORR will verify the SPR Facility's implementation of any necessary compensatory measures related to the site boundary issue.

2.3 Reviews of Safety Basis Processes

SNL has taken the insights provided by the DNFSB as an opportunity for a comprehensive review of nuclear facilities safety basis processes. This review was conducted by key SNL management, outside experts and an Independent Evaluation Team commissioned by the Sandia Site Office (SSO). In addition, a formal root cause analysis was performed, the results of which are included as Attachment B and summarized in Section 2.4. Based on these assessments, SNL has a better understanding of the underlying causes of the identified safety basis deficiencies. This includes the Board's concern related to fundamental underlying issues.

As a result, senior SNL management has taken action to make changes both at the corporate and at the facility level, necessary to ensure safety and the adequacy of the SNL nuclear facility safety bases. A series of reviews and reports to senior management have been conducted. Additional reviews and reports will be completed over the next several months. The goal of these reviews is to identify and report weaknesses and necessary corrective actions to senior management to ensure that SNL safety bases are adequate, that safety basis processes are significantly improved, and that these processes provide consistent and long-term improvement in safety basis formality and processes. The near and long term actions taken to improve SNL safety bases are discussed further in Section 2.2 and Section 3.

Based on an independent review, SNL concluded that two related concerns underlie the deficiencies identified by the DNFSB:

1. SNL performance in safety analysis has not kept up with customer expectations particularly in the areas of hazards analyses, needed processes, formality, thoroughness of documentation, and ability to appropriately and quickly respond to stipulated requirements, and
2. SNL has failed to apply appropriate personnel resources to ensure adequate capacity for accomplishing safety bases activities.

"Capacity" in number 2 above refers to adequately qualified, trained personnel using formal preparation and review processes to assess hazards, to prepare and review safety basis

documentation, and to conduct safety bases reviews. Capacity also implies communication processes to keep track of and to anticipate the DOE actions to improve safety and to ensure our operations are in full compliance. Capacity also includes having sufficient safety basis personnel to perform safety basis work without having to draw upon the personnel needed to safely operate the facilities.

2.4 Root Cause Analysis

A formal root cause analysis was conducted to determine why Sandia's nuclear safety basis process and documentation, while not resulting in unsafe operations, have not met customer expectations. This analysis concluded that the underlying cause is that Sandia has failed to manage the nuclear safety basis program in a formal, systematic manner based on recognized management system standards. The following contributing causes were identified.

- Nuclear safety basis activities have been a low priority for Sandia senior management.
- Inadequate resources have been devoted to nuclear safety basis at corporate, Strategic Management Unit (SMU), and facility levels.
- Sandia does not have a method to identify and flow down requirements into the nuclear safety basis program.
- Sandia does not have a comprehensive program for nuclear safety basis development, documentation, and maintenance.
- The Sandia assessment programs failed to identify the issues.
- The corporate quality assurance (QA) program has not been applied consistently to the nuclear safety basis process.
- Vertical and horizontal communications within Sandia were not fully defined and utilized.
- The channels of communication between Sandia and SSO have not been deliberate, rigorous, and formal. There has been an over-reliance on informal verbal communications, resulting in misunderstandings.
- Sandia has not taken advantage of Lessons Learned from analogous Environment, Safety, and Health (ES&H) programs within Sandia, or from nuclear safety basis programs throughout the DOE complex.

Corrective actions to address these identified causes and other contributing factors are part of the SNL Safety Basis Improvement Project which is discussed in Section 3.2. While the Safety Basis Improvement Project is being implemented, compensatory measures are being proposed.

2.5 Compensatory Measures to be Applied During Corrective Action Process

No unsafe operational or design issues have been identified by the multiple independent reviews. Two significant issues have been identified dealing with the geographic point at which the evaluation guideline has been applied, and the designation of safety class structures systems and components (SSCs). The time and resources required to reevaluate hazard and accident analyses to resolve these two issues are extensive.

A phased implementation strategy is proposed to improve safety margins while issues associated with the site boundary and safety class designation of systems are being resolved. To ensure that proposed and ongoing operations are within a conservative and bounding safety basis envelope,

compensatory measures will be implemented. These measures have been agreed to by SSO, and are presented in Table 2.

A preliminary evaluation of the accident scenarios in the ACRR DSA, accounting for the compensatory measures in Table 2, has been completed. Scenarios selected for accident analysis in the draft revised ACRR DSA are outlined in Table 3 along with the preliminary unmitigated dose estimates given the accident analysis assumptions in the draft revised DSA, and the unmitigated dose estimates with the compensatory measures outlined above in place. Since the ACRR is configured to support pulse operations and there are currently no plans to change to the isotope production configuration, only the dose estimates in the pulse configuration are provided.

Table 3 also provides unmitigated dose estimates at a point 1350 m from TA-V. This location was selected because the area within a boundary of this radius would exclude the riding stables, the golf course, and the nearby air force storage facility.

Note from Table 3 the considerable reduction in unmitigated consequences with the compensatory measures in place. This demonstrates that the ACRRF will operate within a conservative and bounding envelope during the interim until the issues raised by the IET and DNFSB are resolved.

Table 2. Proposed Compensatory Measures for ACRR and Their Bases.

Compensatory Measure	Basis
An operational restriction limiting ACRR reactor power to 2.0 MW steady state (vs. 4.4 MW allowed by the DSA/TSR).	The reactor fission product inventory assumed available for release during accidents is directly proportional to reactor power. Thus, limiting ACRR power to 2 MW will reduce the unmitigated dose estimate of reactor excursion accident scenarios.
Limit of 3 grams of weapon grade Pu in fission foil/small irradiation experiments in which vaporization is a postulated material impact (vs. 7 g allowed by the DSA/TSR)	Several of the accidents postulated in the DSA that involve experiments assume a plutonium source term. By limiting the plutonium in these types of experiments, the unmitigated dose estimates are significantly reduced. Plutonium and Neptunium oxide foils are used to characterize the neutron energy spectrum for several of the W76 and other experimental campaigns. These small quantity foils are necessary to determine the validity and fidelity of the radiation environment generated for the tests. A limit of 3 grams, per experiment, is sufficient to allow for this essential function.
No (i.e., 0 kg) weapons grade Pu in larger fissile experiments in which melt and fire are postulated material impacts (vs. 7 kg allowed by the DSA/TSR)	These type of experiments are characterized by larger quantities of fissile metal that, unlike the fission foil type of experiments, are not subject to vaporization. The release fractions postulated for accidents involving this type of experiment are dominated by self-sustained oxidation near material melt temperatures. With this restriction in place, the maximum plutonium contribution to the unmitigated dose consequences for experiments with significant quantities of fissile material will be 0 rem.
Fissionable material experiments restricted to 100 kW of induced fission power for steady state irradiation and 10^{18} fissions for pulse irradiations (vs. 200 kW and 10^{19} fissions allowed by the DSA/TSR).	The ACRRF experimental envelope includes fissionable materials that are irradiated and undergo fission. The fission product source term generated during the irradiation is proportional to the induced fission power level. Restricting the fission power in the experiments to the levels above will reduce the unmitigated dose consequences for the pulse irradiation accident, the steady state irradiation accident, and the experiment contribution to the earthquake accident.
The total facility Pu inventory is limited to 1.5 kg of weapons grade Pu (vs. 21 kg allowed by the DSA/TSR).	Less than 200 g of plutonium in the form of foils and included in previous experiments are currently stored at the ACRR Facility. Limiting the plutonium allowed in facility storage reduces the unmitigated dose consequences of the “Storage Room Fire” scenario.

Table 3. Unmitigated Dose Reductions Afforded by the Proposed Compensatory Measures.

ACRRF DSA Postulated Accidents (Pulse Configuration Only)	Unmitigated Dose Estimate at 3000 m Under Current Accident Analysis Assumptions	Unmitigated Dose Estimate at 1350 m Under Current Accident Analysis Assumptions	Unmitigated Dose Estimate at 1350 m with Compensatory Measures in Place
Uncontrolled Regulating Rod Withdrawal	2.53 rem	7.27 rem	3.33 rem
Regulating Rod Withdrawn Too Fast[1]	5.42 rem	15.62 rem	7.14 rem
Pulse or TRW[2] from High Power	2.53 rem	7.27 rem	3.33 rem
Greater than Planned Reactivity Addition	2.53 rem	7.27 rem	3.33 rem
Loss of Heat Sink	0.50 rem	1.43 rem	0.66 rem
Partial loss of pool water	0.50 rem	1.43 rem	0.66 rem
Heavy Load Dropped on Experiment	0.95 rem	3.30 rem	0.56 rem
Uncontained Explosives Detonation	1.25 rem	3.60 rem	1.65 rem
Experiment Malfunction (Pulse or TRW)[3]	6.37 rem	21.9 rem	8.20 rem
Experiment Malfunction(Steady State)[4]	7.41 rem	13.6 rem	6.89 rem
Overheated Plutonium Experiment w/Fire	13.41 rem	46.0 rem	0.31 rem
Mishandled Fuel Element Transfer Rack	3.27 rem	5.92 rem	2.71 rem
Storage Room Fire	4.48 rem	15.34 rem	2.09 rem
Heavy Load Dropped on Core	0.63 rem	1.80 rem	0.82 rem
Earthquake	4.26 rem	14.0 rem	3.82 rem
Aircraft Crash	13.25 rem	40.47 rem	17.81 rem
Complete Loss of Pool Water (BDBA[5])	39.75 rem	72.06 rem	32.96 rem

[1]This accident is the bounding reactor excursion scenario. The unmitigated analysis assumes full core disruption.
[2]TRW = Transient Rod Withdrawal.
[3]In the unmitigated analysis of this accident, the Pu experiment material is subjected to a rapid reactor power pulse, and is assumed to vaporize. The unmitigated release of the vaporized Pu contributes to over 90% of the dose.
[4]In the unmitigated analysis of this accident, the Pu experiment material is subjected to a steady-state reactor power operation, and is assumed to melt. In this case, only 1% of the Pu is released. The unmitigated release of the fission products generated within the Pu experiment contributes to over 90% of the dose.
[5]BDBA = Beyond Design Basis Accident

2.6 Remaining Open Issues

Issues raised by the DNFSB which remain open include:

- Site boundary
- Safety class designation implications
- Seismic and fire evaluations
- Aircraft accident footprint
- Hazard analysis processes

The following sections discuss the site boundary issue and its potential implications for Safety Class designation requirements in more detail.

2.6.1 The Site Boundary Issue

Recommendations from several reviews have suggested that the site boundary for SNL TA-V nuclear facilities be reevaluated. The site boundary issue raised by the IET and DNFSB is focused on whether NNSA/SNL has adequate control of the exclusion area. Issues associated with the language in the safe harbor documents and applicable definitions in Title 10 of the Code of Federal Regulations (CFR) have been raised and SNL's interpretation of the site boundary has been provided to NNSA/SSO (and included as Attachment C).

Recent reviews also identified Air Force support personnel that reside at the Kirtland Air Force Base (KAFB) stables. Although similar to the continuously occupied locations at the KAFB storage facility, and the KAFB fire station located within the TA-V exclusion area, the residence of this support person and family were unknown and not identified in the TA-V DSAs. This issue has highlighted concerns about the degree of control NNSA and SNL have over the exclusion area. Restricting the area under which NNSA and SNL must exercise control would reduce the site boundary distance from the 3000 meters currently assumed in the TA-V DSAs.

As discussed in detail in Attachment C, SNL (with DOE approval) has traditionally used a 3000 meter "exclusion area" around ACRR and SPR since: (1) that was the closest approach of the KAFB site boundary, and (2) agreements and long-term working relationships between SNL and KAFB were deemed to meet the intent of 10 CFR 20.1003's "… or otherwise controlled." Since several non-reactor nuclear facilities (such as AHCF) are also located in TA-V, it appeared logical to use the same boundary. However, as the DNFSB has pointed out, the guidance of DOE-STD-3009 is applicable to DSA preparation for these non-reactor nuclear facilities, and the language of the DOE standard is more precise and restrictive. Even with a change in the boundary, additional actions must be taken (in coordination with KAFB) to establish control of the revised boundary consistent with the requirements of DOE-STD-3009 (e.g., posting the boundary, revising Memorandums of Understanding, revising procedures, personnel training, and performing drills). Direction from SSO on the definition of the site boundary is expected by January 21, 2005. Once direction is received, SNL will implement the appropriate DOE process to address the impact on its safety bases due to movement of the boundary.

2.6.2 Safety Class Versus Safety Significant Implications

Related to the site boundary issue is the issue of safety structures, systems, and components (SSCs) that may become candidates for Safety Class designation, if the site boundary distance is reduced. Reviewing the source terms associated with TA-V nuclear facilities it was found that the ACRR has the highest unmitigated consequences of all the TA-V accident analyses. A preliminary evaluation of the ACRR SSCs and the processes for designing Safety Class systems was performed (included as Attachment D). Two ACRR systems were identified as potential candidates for Safety Class designation: the reactor protection system and the building confinement/highbay ventilation system.

The preliminary review concluded that it would be feasible to transition the reactor protection system safety function to Safety Class status. However, the preliminary review concluded it would not be feasible to modify the highbay building structure and highbay ventilation system to act as a Safety Class confinement system, given that the highbay is a decades old structure which does not meet Safety Class seismic criteria. The major difficulty in transitioning the reactor protection system to Safety Class status deals with meeting natural phenomena and external event design standards. The reactor protection system does comply with several of the applicable design criteria identified in the preliminary review. This includes single failure criterion (redundancy), quality standards, and human factors engineering.

The reactor protection system safety function could be accomplished by SSCs associated with the ACRR's Plant Protect System (PPS). These SSCs could be transitioned to Safety Class status. However, this transition would have to occur over an estimated 18-24 month time frame, at a potential cost ranging from $2M to $6M. The variation in the cost estimate is due to the potential for major modifications to the control/safety elements, core grid and support structure, and/or the control room and highbay structures. It should be noted that a firm cost/schedule estimate could only be established based on an in-depth analysis and evaluation of the needs for modifications to meet Safety Class design requirements of DOE Order 5480.30.

The safety class transition work essentially amounts to a design basis reconstitution (see DOE Standard 1073-2003) of the PPS and its supporting equipment. Issues include the seismic qualification of the PPS, control/safety elements, the reactor core grid structure, and the control room and highbay building structures, quality assurance pedigree for older components, fire protection studies, human factors studies, and impacts of failures in co-located non-Safety Class equipment. It is anticipated that these studies would identify the need for some modifications to the PPS and/or its supporting equipment. Not only must these studies and potential modifications be completed, but the resulting documentation must be incorporated into an integrated design configuration management and system engineering program to ensure the continued maintenance and reliability of these SSCs. Lastly, this information must be appropriately incorporated into the safety basis (DSA and TSR) of the facility to be approved by NNSA/SSO.

2.7 Explicit Response to DNFSB Comments on AHCF Safety Basis

Lastly, the DNFSB letter also provided a number of detailed comments regarding the AHCF DSA. SNL agrees with the concerns raised by the DNFSB. The issues raised are addressed in detail in Attachment E. Overall, the status of AHCF actions is summarized below:

- Most AHCF activities were curtailed on 11/18/04 to allow personnel redeployment to mission critical programs.
- A formal request of a NNSA interpretation of site boundaries was submitted on 10/29/04. Direction concerning the site boundary location is expected from SSO by 01/21/05.
- Relocation of the natural gas line out of AHCF facility was completed on 10/26/04.
- At least 90% of the combustible material in the mid-bay adjacent to the AHCF was removed by 10/28/04. A combustible load procedure for the mid-bay was developed.
- Improvements were initiated on 8/31/04 to increase the fire rating for the boundary wall between the AHCF and the adjacent mid-bay. Design and documentation activities are in process.
- A new facility seismic mitigation evaluation was completed on 11/23/04. The results were not adequately conclusive. Further evaluations are underway.
- A review was initiated on 11/18/04 to identify practical facility and process changes to improve the overall radiological controls posture of the AHCF.

3. Actions to Ensure Adequacy of Future Safety Bases

In addition to assessing the adequacy of the current nuclear facility safety bases, SNL was also asked by the Board to describe actions (a) to ensure more effective closure of comments from future safety basis review teams, and (b) to ensure that future draft safety basis submissions are adequate. Based on the internal SNL reviews as well as the root cause analysis, it was concluded that the SNL safety basis program must be managed in a more formal, systematic manner with greater corporate focus and senior management involvement. Elements of the improved SNL safety basis program are described below.

3.1 Enhancement of SNL Corporate Role in Safety Bases

SNL has established a corporate safety bases organization. Central to this organization is the Safety Basis Department which is part of the Environment, Safety, and Health Department. The Safety Basis Department reports to and is given oversight by SNL senior management. It will have an important role in future safety basis activities and ensuring the quality of the documentation that is produced. As shown in Figure 1, the Safety Basis Department's role is that of the single SNL point of contact for all formal safety bases interactions with NNSA. Informal contacts between SNL personnel, NNSA, and other oversight personnel during the analysis process will remain. These contacts are encouraged to ensure that the communication necessary for a clear mutual understanding of technical issues and concerns exists.

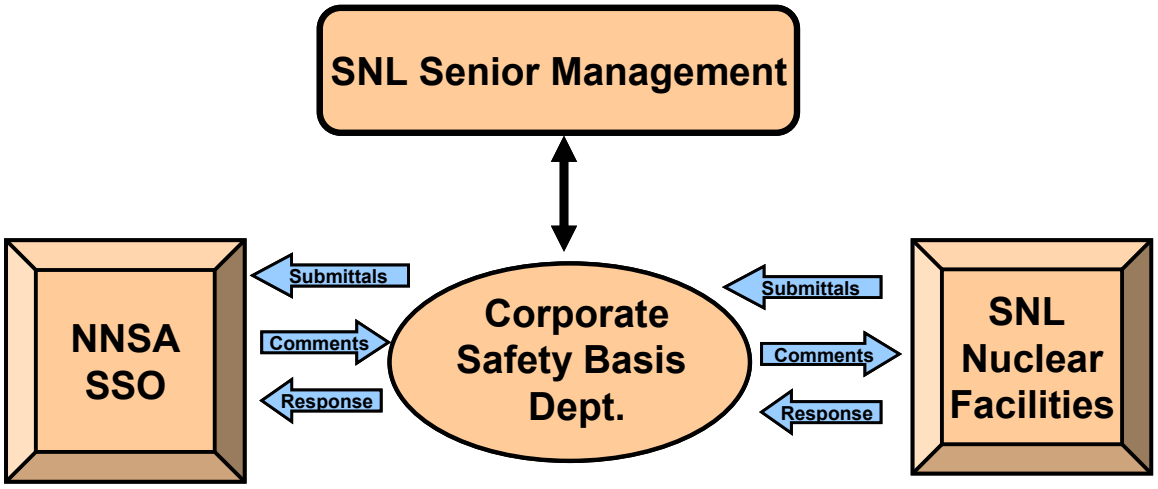

Figure 1. Enhanced Corporate Role in the SNL Safety Basis Process.

The SNL corporate Safety Basis Department:

- Has corporate ownership of and responsibility for all safety basis processes, including the preparation of safety basis requirements and training documentation,
- Provides review and oversight of all aspects of these processes, and
- Is responsible for ensuring adequate resources are applied to the preparation and implementation of safety bases.

The near-term focus of the Safety Basis organization includes:

- Enhanced training of staff at both the corporate and facility level to facilitate the development of and continued maintenance of improved safety basis documentation.
- A more formal process for safety basis interactions within SNL and between SNL and the NNSA Sandia Site Office, including meeting minute records and signed agreements.
- More efficient review processes to ensure the broadest available input is obtained early in the development process, keeping preparation efforts current with orders, guidelines, and regulations, and any changes to those documents. An example of the SNL Safety Bases department's near-term improvements to the Safety Basis (SB) process at SNL is the development and implementation of a process that formally incorporates 30/60/90 and 100% review points of SB documents.
- Guidance document describing the near-term two-step readiness review process discussed in Section 2.2.2.
- A project plan for the Safety Basis Improvement Project (see Section 3.2)
- Databases of significant comments and lessons learned to assist preparation of future safety bases.
- Necessary training programs fully implemented, a phased process discussed in Section 3.2.2.

3.2 Safety Basis Improvement Project

SNL has concluded that it must raise the standards applied to safety basis processes. As a result of the SNL review, SNL has implemented the initial phases of a Safety Basis Improvement Project to:

- Improve, where necessary, existing safety basis processes;
- Provide additional resources, management attention, and independent review to ensure that future safety basis submittals are both complete and compliant, and that future safety basis comments are resolved properly in a timely, formal manner.

This Safety Basis Improvement Project, applicable to both nuclear facilities and corporate processes, addresses the underlying concerns identified in Sections 2.3 and 2.4, and is the vehicle SNL is using to improve safety basis performance. The key elements of the Safety Basis Improvement Project are:

- Completing a safety basis self-assessment of the currently operating nuclear facilities: the Gamma Irradiation Facility (GIF) and the Manzano Nuclear Facility (MNF). These facilities have adequate safety bases for continued operation. The tenets of the planned Safety Basis Improvement Project will be applied to updates to both facilities' safety basis documents during their annual review processes.
- Completing an independent safety basis review of the reactor nuclear facilities (ACRR and SPR) and the other non-reactor nuclear facility (AHCF) before future operations. These nuclear facilities are not operating, and will not be operated, until the independent reviews of their safety bases have been completed and appropriate improvements to safety basis documentation are incorporated and approved.

- Enhancing the SNL corporate role in the safety basis process by increasing the involvement of the SNL Safety Basis Department and more active involvement and oversight by senior management at SNL,
- Improving the formality of the Safety Basis (SB) process both internal to SNL and with SSO thereby ensuring that formal SB methodologies are established and resolution of comments concerning SB documentation are formally addressed, documented and auditable,
- Focusing initial improvement efforts on mission critical programs,
- Providing additional personnel resources to safety basis activities, thereby improving SNL capacity to adequately perform SB activities,
- Developing and implementing a continuing education program so that personnel are adequately trained to the goals of the Safety Basis Improvement Project, ensuring all personnel are aware of their role and responsibilities in achieving these goals, and providing tools for consistent performance in the safety basis arena,
- Establishing an Independent Nuclear Safety Board consisting of independent, outside SB experts with experience in DOE safety orders, guidelines and documentation to oversee and provide guidance to SNL SB improvements (see Section 3.2.3), and
- Revising the charter and make-up of the SNL Nuclear Facilities Safety Committee (NFSC) to have a more balanced approach to safety analysis, documentation and operations (see Section 3.2.4).

Several of these key elements are discussed in more detail in the following sections.

3.2.1 Safety Basis Development and Review Process Improvements

Longer-term improvements of the Safety Basis Improvement Project include development of documented processes, programs, and requirements for all phases of safety basis work and implementation of continuing training necessary for the use of these processes. (Previously, SNL had depended upon analyst "skill of the craft" to implement DOE requirements and guidance, without an authoritative statement of SNL corporate expectations.) These processes include:

- Safety Analysis and Risk Review Handbook,
- Safety Basis Training and Qualification Requirements,
- Safety Basis Preparation Requirements,
- Document Review Requirements,
- Safety Basis Implementation and Validation Requirements,
- Requirements for readiness reviews conducted by facility management, SNL corporate, and independent personnel, and
- Safety basis training programs for new and existing personnel incorporating the above listed items.

Commitment dates for the above actions will be included in the plan for the Safety Basis Improvement Project. Estimated completion dates are included in the task summary of Section 4.

3.2.2 Personnel Education and Training

The precepts of the Safety Basis Improvement Project will not be achieved without a well-qualified, trained workforce fully aligned to the Project's goals. As a result, SNL has both near-term and long-term efforts aimed at personnel qualification and development.

Near-term efforts emphasize ensuring all personnel understand the goals of the Safety Basis Improvement Project and their roles and responsibility for the safe execution of their day-to-day work, in accordance with approved procedures and limits. This training involved extensive safety basis training for appropriate personnel, all-hands communications, and job site discussions that emphasized safety principles and practices, limiting conditions of operation for individual facilities and experiments, and the immediate need to improve the safety bases at SNL. It also emphasized each individual's empowerment to question the safety of any operation and his/her ability and responsibility to stop any unsafe activities. This training has been completed. Topics covered in this training included how SNL got to where it is with regard to SB adequacy, the clear need to improve our approach to SB development, and what SNL will be doing to improve its performance—both near- and long-term. Throughout the training, the focus was on understanding the problem and embracing change.

As noted in the earlier discussion of the plan for the Safety Basis Improvement Project, development of extensive new documentation is planned. This documentation will be developed cooperatively with the personnel at TA-V, as well as SSO, and incorporated into the workforce-training program to ensure long-term personnel alignment to SNL's expectations regarding safety. The revised instruction to incorporate a continuing Safety Basis training program for applicable personnel will be completed by the end of February 2005, the first course will be delivered in April 2005, and the proposed curriculum will be fully developed by the end of December 2005.

3.2.3 Establishment of an Independent Nuclear Safety Board (INSB)

SNL has established an Independent Nuclear Safety Board of recognized safety experts to provide guidance and oversee nuclear safety bases preparation and adequacy at SNL. The INSB has focused initially on the safety basis issues raised by the DNFSB review and the SNL review. The initial membership of this board consists of:

David Pye – Former Reactor Engineering Division Director with 38 years of Naval Reactors experience,
Steve Krahn – Naval Reactors and former DNFSB Staff Member with extensive DOE facility review and assessment experience—a total of 26 years of experience, and
Art Tryon – 34 years of Naval Reactors experience, extensive industrial radiological controls and DOE facility assessment experience.

SNL is presently assessing its safety committee structure supporting its nuclear facilities, and will assess how to integrate INSB activities with other review groups presently in existence at TA-V and SNL. The INSB will be involved with, as a minimum, review/oversight of the Safety Basis Improvement Project and evaluation of the results of SNL DSA reviews. These personnel have been actively involved in SNL improvements and planning to date.

3.2.4 SNL Nuclear Facility Safety Committee (NFSC) Improvements

The Nuclear Facility Safety Committee (and its subordinate committees) have not been effective at ensuring that safety bases meet DOE expectations. There have been several contributing causes to this:

- The Committee charters have not adequately defined the expected role of the safety committees with respect to safety basis documentation. The Committees have historically made recommendations regarding technical accuracy and engineering analyses, but they have not understood their role to involve assessing whether specific processes have been adequately invoked in safety basis documentation presented to the Committees.
- The Committee membership has not required expertise in safety basis documentation or methodology in the explicitly identified skill sets for members of the Committee.
- The criteria for acceptable safety basis documentation has not been established and propagated to the safety committees. The Committee membership has historically established their own sense of acceptable risk as the basis of recommendations to SNL management. Individual technical criteria (e.g., hoisting and rigging, pressure safety data packages) exist, but the general metrics for Committee evaluation of safety basis documentation have been more subjective.
- Those issues of safety basis documentation adequacy that were identified by Nuclear Facility Safety Committees have not been properly interpreted by SNL management. Issues raised have historically been addressed as individual specific issues to be corrected in a specific document, and have not been adequately evaluated as a symptom of more fundamental weaknesses in the safety basis program.

Improvements to the Safety Committee process to correct these deficiencies include:

- Modify the nuclear facility committee charters to explicitly include the overall assessment of the adequacy of safety basis documentation.
- Add members to the Committees with nationally recognized safety basis expertise, to include expertise in DOE safety basis methodology and expectations.
- Increase the external membership of the Nuclear Facility Safety Committee to increase the ratio of members with views and perspectives external to SNL.
- Increase the effectiveness of communication from the safety committees to SNL senior management after each Committee meeting to ensure committee perceptions and concerns are adequately translated to senior management. Ensure feedback from the Committee includes general assessments of the overall safety basis program in addition to activity specific recommendations and concerns.

4. Task Summary

Tables 4, 5, and 6 summarize the actions taken, or to be taken, in response to the issues raised or suggested by the DNFSB comments.

Table 4. Task Summary for Actions Related to Corporate Safety Basis Processes.

Time Frame	Task	Date	Complete	DNFSB Issue*
Short-Term	Independent Reviews and Assessment	Ongoing		1
	Corporate Nuclear Safety Basis Plan Approved	December 2004	√	1, 3
	Root Cause Analysis	January 2005	√	1, 2, 3
	Safety Basis Improvement Project Plan	January 2005		1, 2, 3
	SNL Corporate Office Agreement with SSO	March 2005		2, 3
Mid-Term	Corrective Action Plan	March 2005		1, 2, 3
	Databases of Comments and Lessons Learned	April 2005		1, 3
	Supporting Safety Basis Documents Completed	November 2005		2, 3
	Training Programs Implemented	April 2005		2, 3
Long-Term	Internal Review Requirements for SNL Safety Basis Documents	September 2005		3
	Integration of Safety Basis Documents and Processes	End FY06		2, 3
	Hiring Program to Increase Safety Basis organization personnel	End FY06		3

*DNFSB Issues:
1. Adequacy of safety bases for each currently operating nuclear facility at SNL.
2. Actions to be taken to ensure more effective closure of comments from future Safety Basis review teams.
3. Actions to be taken to ensure that adequate draft safety bases are submitted by the SNL contractor in the future.

Table 5. Task Summary for Actions Related to SNL Nuclear Facilities in General.

Time Frame	Task	Date	Complete	DNFSB Issue*
Short-Term	Examine DNFSB-Identified Issues	October 2004	√	1, 2, 3
	Halt Nuclear Facility Restart Activities and Adjust Schedules	November 2004	√	1
	Perform Safety Basis Review of all Facilities	January 2005		1, 3
Mid-Term	Corrective Action Plan	December 2004	√	3
	Evaluate Effectiveness of SNL NFSC and Take Appropriate Action	March 2005		3
	Assess Hazard Categorizations	November 2004	√	3
	Allocate Appropriate Resources	September 2005		2, 3
	Aircraft Accident Footprint	September 2005		1
	Hazard Analysis Processes	September 2005		2, 3
	Site Boundary/Emergency Management	January 2006		1
	Safety Class Designation	September 2006		1
	Seismic and Fire Evaluations	September 2006		1
	Infrastructure Improvement	Ongoing		2, 3

*DNFSB Issues:
1. Adequacy of safety bases for each currently operating nuclear facility at SNL.
2. Actions to be taken to ensure more effective closure of comments from future Safety Basis review teams.
3. Actions to be taken to ensure that adequate draft safety bases are submitted by the SNL contractor in the future.

Table 6. Task Summary for Actions Related to TA-V Nuclear Facilities.

Facility	Task	Date	Complete	DNFSB Issue*
ACRR	Safety Basis Review	January 2005		1
	Issue Safety Evaluation Report	January 2005	√	1
	Complete Readiness Review	March 2005		1
	Implement Compensatory Measures and/or Corrective Actions	March 2005		1
AHCF	Safety Basis Review	May 2005		1
	Safety Basis upgraded and approved along with associated ORR	December 2005		1
	DSA rewritten	May 2005		1
	Natural gas line relocated	October 2004	√	1
	Combustible material relocated	October 2004	√	1
	Fire Rating improvement for mid-bay wall	March 2005		1
	Identify Material Limit Controls	February 2005		1
	Facility hazards being revised	March 2005		1
	Long-term contamination controls implemented	March 2005		1
	Determine aircraft crash scenario implications, Material-at-Risk quantities established	March 2005		1
	Startup AHCF	December 2005		--
SPR	Safety Basis Review	February 2005		1
	Issue SER	April 2005		1
	Complete Readiness Review	July 2005		1
	Implement Compensatory Measures and/or Corrective Actions	May 2005		1
GIF	Safety Basis Review	January 2005	√	1, 3
	Create procedure for controlling radioactive material limits.	April 2005		1
	Draft Letter Requesting Guidance on DOE-STD-1027	January 2005		2, 3
	TA-V Radioactive Material Inventory	December 2004	√	1
	Revised Procedure for Tracking Radioactive Material	January 2005		1
	Root Cause Analysis of Non-compliance with Radioactive Material Handling and Storage Procedure	April 2005		1
	Comment Resolution Package for Revised GIF DSA	April 2005		1
	Disposition Comments to SSO	March 2005		1
	Final GIF DSA version	April 2005		1

*DNFSB Issues:

1. Adequacy of safety bases for each currently operating nuclear facility at SNL.
2. Actions to be taken to ensure more effective closure of comments from future Safety Basis review teams.
3. Actions to be taken to ensure that adequate draft safety bases are submitted by the SNL contractor in the future.

5. Conclusion

SNL has taken the insights provided by the DNFSB as an opportunity for a comprehensive review of SNL safety basis processes. A careful assessment has been made of the DNFSB report, SSO oversight comments, the SSO Independent Evaluation report, assessments by outside experts, and internal evaluations that include formal root cause analyses and determination of causal issues. Based on this work, SNL concluded that its safety basis process requires improvement.

To achieve this improvement SNL formulated a plan of action that will assure continued improvement in the safe operation of SNL nuclear facilities, address the identified issues and concerns, and fundamentally improve SNL safety basis processes. This plan will result in clearly defined and universally understood corporate expectations and guidance for nuclear safety basis development, documentation, and maintenance. To achieve the required improvement will require additional personnel resources and management attention. SNL is committed to making the required investments to achieve this improvement. Actions have been initiated to make the necessary resources available.

Sandia National Laboratories
New Mexico

Safety Basis Department
Program Plan

PLA 04-19

Safety Basis Adequacy Verification Criteria: Focused Topics for Nuclear Documented Safety Analyses (DSAs)

Revision 00
December 20, 2004

Approved by:

(Original signed by Steve Coffing for J. Shaw) *12-17-04*
John D. Shaw, Manager Date
Safety Basis, Department 6326

Approved by:

(Original signed by John F. Loye) *12-20-04*
John F. Loye, Deputy Director Date
ES&H and Emergency Management, Department 6320

SAFETY BASIS ADEQUACY VERIFICATION CRITERIA: FOCUSED TOPICS FOR NUCLEAR DOCUMENTED SAFETY ANALYSES (DSAs)

Subject Matter Expert: John D. Shaw
PLA 04-19, Revision 00
Effective Date: December 20, 2004; Replaces Document: N/A

Table of Contents

Introduction **1**
Description of the Program 1
Program Objectives 1
Ownership and Review 1
Safety Basis Adequacy Verification Processes **1**
General Safety Basis Adequacy Verification Criteria 1
Documentation and Recordkeeping **7**
References **7**

INTRODUCTION

This document describes Sandia National Laboratories (Sandia) process for implementing SB (SB) activities for nuclear facility operations in order to effectively review SB documents, criteria that cross between technical SB requirements, and core integrated safety management system (ISMS) requirements. The criteria elements contained herein perform this function for nuclear SB documents.

For purposes of this document, DOE and NNSA are synonymous.

Description of the Program

The Safety Basis Department has implemented the Corporate Safety Basis Program to define the scope of SB and set forth the guidelines for conducting a SB activity at Sandia-controlled premises within New Mexico. Safety Basis Department staff, subject matter experts (SMEs), and Members of the Workforce who are involved with nuclear facility operations perform these programmatic and functional area SB activities in accordance with this plan. Program owners, SMEs, and these Members of the Workforce then work with line managers and ES&H coordinators to improve line implementation of SB requirements.

Program Objectives

The objectives of the SB adequacy verification criteria are as follows:

- Identify SB adequacy verification criteria that are focused topics for nuclear DSAs.
- Provide standardized guidance and processes for effective and meaningful SB activities for DSAs that supplement current requirements outlined in CPR400.1.1/MN471001, *ES&H Manual*.
- Assist program owners and SMEs in developing and implementing nuclear DSAs that meet performance requirements and compliance requirements.
- Assist with assuring management that these nuclear DSAs contribute to the maintenance of a safe and healthy work place and the protection of the environment.

Ownership and Review

The Safety Basis Department Manager is responsible for the content of this plan. Recommendations for improvement and comments regarding the modification of this plan should be forwarded to the Safety Basis Department Manager. This document will be reviewed at least every two years.

SAFETY BASIS ADEQUACY VERIFICATION PROCESSES

General Safety Basis Adequacy Verification Criteria

SB adequacy verification criteria are divided into the following four parts:

- Part A addresses the component of Core Function 2 involving the identification of hazards.
- Part B addresses the component of Core Function 2 involving the analysis of hazards.

- Part C addresses the development and implementation of controls, consistent with Core Function 3.
- Part D addresses feedback and continuous improvement, consistent with Core Function 5.

Issues of potential non-compliance (PNC), those which are in the group of comments aligned with Core Function 4, all involve hazards identification or hazards analysis. Therefore, the PNC issues are embedded in Parts A and B.

The following is not an exhaustive set of criteria designed to assure complete ISMS core function execution or to complete DOE requirements compliance. Instead, it is a focused set of criteria developed with the themes of proper DSA development. Incorporating and adhering to the following criteria would produce the foundation of a robust SB. A thorough evaluation of the Sandia nuclear SBs against the following criteria is a credible approach to assessing SB health and will provide important insight into evaluating risk of continued operations.

SB Adequacy Verification Criteria - Major Element (Part)	Sub-Element	Item
A	**Adequacy of Hazards Identification – ISMS Core Function 2**	
	1.	Is the hazard identification method documented in the DSA or in a referenced retrievable citation?
	2.	Is the method consistent with DOE guidance and requirements or, otherwise specifically approved by DOE as a noted exception?
	3.	Is the hazards identification checklist or other format for the range of hazards considered consistent with standard nuclear and chemical industry tools?
	4.	Are all potential energy sources identified? (e.g., natural gas lines)
	5.	Are the hazards presented by adjacent DOE facilities identified?
	6.	Are the hazards presented by nearby non-DOE facilities identified?
	7.	Are all natural phenomenon hazards addressed, including seismic hazards?
	8.	Are transportation hazards addressed? (e.g., airplanes, airports, helicopters, trucks, cars, rail lines)
	9.	Is there a safeguards and security hazards analysis?
	10.	Is there a fire protection analysis (FPA) and does the DSA hazards identification capture all hazards identified in the FPA?
	11.	Are all modes of facility operation and all phases of facility life, as defined in the DSA, covered by the scope of the hazards identification section?
	12.	Are potential combinations of hazards or possible synergistic effects of hazards identified?
	13.	Are hazards identified that relate to the trained facility worker? Are routine industrial hazards handed off to the Industrial Safety Program? Are routine radiological hazards handed off to the Radiological Protection Program?
	14.	Are hazards identified that relate to co-located workers in very close proximity to or within the facility, particularly those who may not be

SB Adequacy Verification Criteria - Major Element (Part)	Sub-Element	Item
		trained on or familiar with the facility?
	15.	Are hazards identified that relate to the co-located workers on the site or members of the transient public who may not be expected to be trained but are within DOE protective control?
	16.	Are hazards identified that relate to members of the public who are not expected to be trained and who are not within DOE protective control?
	17.	Is the full range of potential materials at risk identified? Forms, quantities, toxicological, radiological? Are realistic materials at risk values used, consistent with facility's operations, for hazards identification?
	18.	Has the hazard categorization been determined per the methods of DOE-STD-1027, *Hazard Categorization and Accident Analysis Techniques for Compliance with DOE Order 5480.23, Nuclear Safety Analysis Reports*?
	19.	Is the justification sufficient in all cases where an identified hazard is not advanced to accident scenario development? Are all identified hazards dispositioned? (i.e., dismissed as incredible, dismissed as below any threshold of concern, channeled to the health and safety plan, channeled to the Radiological Control Program, advanced to accident scenario development, etc.)
	20.	Are realistic and lowest possible material-at-risk (MAR) values used, consistent with facility's operations, for hazards identification?
	21.	Are unique and possible experimental hazards identified?
B	**Adequacy of Hazards Analysis - ISMS Core Function 2**	
	1.	Are the accident analysis methods documented in the DSA or in a referenced retrievable citation?
	2.	Are the methods consistent with DOE guidance and requirements or, otherwise specifically approved by DOE as a noted exception?
	3.	Does accident scenario development fully envelop the range of identified hazards?
	4.	Does the accident analysis process begin with fully unmitigated scenarios and consequence determination?
	5.	Are the MAR assumptions fully bounding, without any dependence on implied controls? Do the MAR assumptions consider accumulation of materials and deposits of contamination over time?
	6.	Are dependencies for actions taken at other facilities and/or by entities not under direct control by the facility implied by the bounding assumptions for MAR?
	7.	Are combinations of events considered in bounding accident scenario development? Is the logic supporting the dismissal of combination events rigorous?
	8.	Are process histories and test data sources for MAR fully documented and defensible?

SB Adequacy Verification Criteria - Major Element (Part)	Sub-Element	Item
	9.	Are accident scenarios formulated such that controls derived from analysis results fully address the subordinate hazards bounded by that scenario?
	10.	Are assumptions for release fractions and material transport supported by accepted research, testing, model-development or facility-specific data?
	11.	Are there any dependencies of MAR, release fractions and material transport assumptions on facility or process characteristics or configurations? (i.e., facility structural behavior during a seismic event, position of heavy equipment such as cranes, etc.) If so, have these been captured, as appropriate?
	12.	Are accident frequency determinations well documented and supported by data, as appropriate? Are probabilistic arguments, if used, fully documented? Are all dependencies of frequency determinations and probabilistic arguments on design features, process characteristics, administrative programs, etc. fully identified?
	13.	Is the possibility of accidents affecting multiple facilities (e.g., a plane crash) considered in the formulation of bounding scenarios?
	14	Is the analysis sufficient to defend the effectiveness of accident prevention features and strategies?
	15.	Are the receptor locations for the co-located worker and members of the public consistent with approved DOE methods? Do all such assumptions properly consider what is within DOE control and what is not (e.g., ability to train persons at risk, ability to isolate or evacuate persons at risk)?
	16.	Are all accident analysis assumptions captured, presented and documented in a manner that lends itself to complete identification of dependencies on design features, process characteristics, administrative programs, alarms and other mitigation systems?
	17.	Are all accident analysis assumptions documented such that a robust unreviewed safety question (USQ) process can be executed to effectively evaluate the contractor's authority to make facility modifications, process modifications and administrative changes?
	18.	Is the possibility of accidents affecting multiple facilities (e.g., a plane crash) considered in the formulation of bounding scenarios?
	19.	Are analysis assumptions consistent with the fire protection analysis (FPA), the health and safety plan, and CPR400.1.1.32/MN471016, Radiological Protection Procedures Manual? And, are these assumptions clearly documented so that USQ evaluations for changes to these plans/documents will not unknowingly invalidate the DSA accident analyses?
	20.	Is the site boundary exposure analysis consistent with DOE-STD-1027, *Hazard Categorization and Accident Analysis Techniques for*

SB Adequacy Verification Criteria - Major Element (Part)	Sub-Element	Item
		Compliance With DOE Order 5480.23, Nuclear Safety Analysis Reports? Is the absolute minimum MAR used to permit the site boundary to be as close as possible to the facility?
C	**Adequacy of Controls Development & Implementation – ISMS Core Function 3**	
	1.	Is every accident analysis assumption related to facility configuration, process characteristics, material inventory, administrative processes, accident prevention, and accident mitigation dispositioned into a/an: • Design Feature. • Safety system functional requirement and performance criterion. • TSR limit. • TSR surveillance requirement. • TSR response or recovery action. • TSR specific administrative controls. • Element of a safety management program. • Instrument calibration and test plan. • Interface agreement with another facility. • Any other items, as appropriate.
	2.	Does every control strategy listed in C-1 above provide the expected protection of its associated SB accident scenario, and all of the hazards subordinate to the safety basis accident scenario?
	3.	Does the DSA text unambiguously document the connection between the accident scenarios and the derived control strategies?
	4.	Do the TSR Bases unambiguously document the connection between the DSA accident scenarios and the derived TSRs?
	5.	Is the control derivation documentation in the DSA and the TSR Bases consistent?
	6.	Are the safety classifications for credited systems, structures, and components (SSCs) assigned commensurate with the level of consequence to the affected receptors, consistent with DOE standard practice?
	7.	Are the design classifications for credited SSCs assigned commensurate with level of hazard (e.g., seismic performance category)?
	8.	Are defense-in-depth items clearly delineated in the DSA and do the DSA and/or safety evaluation report (SER) clearly specify the authority of the Contractor to change or delete these items?
	9.	Are all controls and credited response actions compatible with requirements and response actions associated with other site facilities?
	10.	Have controls and credited response actions been tested to ensure they perform as designed?
	11.	Are all TSR controls unambiguously clear? Are all response and recovery actions complete and unambiguously clear? Are any approval requirements clearly documented?

SB Adequacy Verification Criteria - Major Element (Part)	Sub-Element	Item
	12.	Does the DSA or the TSRs create additional tools or administrative processes to evaluate change, above and beyond the USQ process (e.g., campaign specific process plans)? If so, is the tool fully consistent with the DOE requirements for the USQ process? Are approval requirements unambiguously clear and consistent with DOE requirements?
	13.	Have experimental applications and testing envelopes been adequately developed to properly implement the USQ process?
	14.	For material requiring special security, have appropriate controls been evaluated and implemented as related to safety?
	15.	Have TSRs been developed with appropriate specificity when program elements are credited as being necessary for safety (e.g., specific Radiation Protection Program requirements, specific FMOC maintenance requirements)?
	16.	Does the facility use a consistent and approved methodology to assign the risk consequences based on the expected hazard to the worker, co-located worker, and the public?
D	**Adequacy of Feedback & Continuous Improvement – ISMS Core Function 5**	
	1.	Is there a record of internal review of the DSA submitted for DOE approval? Are the qualifications of the reviewers documented? Are all review comments dispositioned?
	2.	For significant oversights or technical errors discovered during internal review, was the cause determined and remedied?
	3.	Did the internal review team include representation from the operations organization charged with implementing and operating within the SB controls?
	4.	Are there any outstanding corrective actions or other action items where remedies to noted shortcomings of the SB are still in progress?
	5.	If you answered “yes” to D-4 above, is there an interim risk analysis and are there any compensatory measures?
	6.	Are consistent specific administrative controls implemented where appropriate amongst all facilities? Are similar procedural requirements implemented (e.g., combustible load requirements, on-site transportation requirements, etc)?
	7.	Are records available or incorporated into the SB to describe how analytical decisions were made?
	8.	Are peer reviews conducted and documented for analytical calculations and decisions?
	9.	As part of the SB review, were lessons learned from past documentation revisions/updates reviewed?
	10.	Were all safety evaluation review courses of actions, USQ determinations (USQDs), and previous SB related comments incorporated into this revision/update?

DOCUMENTATION AND RECORDKEEPING

All documentation related to these SB activities by the Corporate Safety Basis Department will be retained in accordance with CPR400.2.13.14, *Records Retention and Disposition Schedule & Processes*. Deliverables required from the various SB activities and signed official report copies are kept in the Corporate Safety Basis Department organizational files and electronic copies of the following shall be forwarded to the appropriate nuclear facility's management. Records may include, but are not limited to:

- Correspondence related to evaluation results.
- Review summaries.
- Cost impact estimates, as appropriate.
- Meeting minutes, if the meeting was conducted for the purpose of evaluation, as appropriate.
- Final ORR or RA reports, as applicable.

REFERENCES

The following references have been used as source documents in the development of this plan:

- CPR001.1, *Corporate Business Rules System Standard*.
- CPR001.3.2, *Corporate Quality Assurance Program*.
- CPR001.3.4, *Corporate Work-Management Process.*
- CPR400.1.1/MN471001, *ES&H Manual*.
- CPR400.2.13.14, *Records Retention and Disposition Schedule & Processes*.
- DOE G 414.1-1A, *Management Assessment and Independent Assessment Guide*.
- DOE O 414.1A, Chg. 1, *Quality Assurance*.
- DOE P 450.5, *Line Environment, Safety and Health Oversight.*
- DOE-STD-1027-92, *Hazard Categorization and Accident Analysis Techniques for Compliance with DOE Order 5480.23, Nuclear Safety Analysis Reports*.
- SNL, DE-AC04-94AL85000, *Management and Operating Contract between Sandia Corporation and DOE* (Prime Contract).

Attachment B

Nuclear Safety Basis
Root Cause Analysis

January 7, 2005

Ron Simonton, Team Leader

Introduction

The Root Cause Analysis (RCA) Team was chartered by Les Shephard to conduct an independent root cause analysis of issues identified by an Independent Evaluation Team (IET) review (Ref. 1) performed for the Sandia Site Office (SSO) of the National Nuclear Security Administration (NNSA), Sandia's own independent reviews, and the issues identified in the trip report (Ref. 2) attached to the Defense Nuclear Facilities Safety Board (DNFSB) letter of September 27, 2004 (Ref 3).

SSO and the DNFSB have noted examples of deficiencies in current nuclear safety basis (SB) activities and processes. In the September 27, 2004 DNFSB letter, inadequacies and fundamental deficiencies in Sandia's nuclear safety basis process were described. SSO has asked Sandia to provide a response to both SSO's and DNFSB's issues, including a root cause analysis of the issues (Ref. 4). This analysis report is a part of the response and will serve as the basis of a corrective action plan (CAP).

Present at the RCA meetings were the Root Cause Analysis Team, as well as subject matter experts throughout Sandia.

Scope

The scope of this activity was to conduct a root cause analysis of the issues identified in the IET review, DNFSB letter, and the FY04 Performance Evaluation Report (Ref. 5). The analysis focused on identifying causal factors within Sandia's control.

OFFICIAL USE ONLY
May be exempt from public release under the Freedom of Information Act (5 U.S.C. 552), exemption number and category: 6 - Commercial/Proprietary
Department of Energy review required before public release
Name/Org: Suzanne H. Weissman/SNL 6006 Date: 1/6/05
Guidance (if applicable _____

Root Cause Methodology

The team started with a review of the issues identified in the various reports. We categorized, binned and sorted the issues, and determined that they were symptomatic of larger programmatic issues. The resulting root cause analysis focused on these programmatic issues.

The team developed a single problem statement that summarized the programmatic issues (see below).

The Systemic Factors Analysis (SFA) approach (Ref. 6 and 7) was used to determine causal factors for the programmatic issues (see Attachment 1).

A list of contributing causes and the root cause (see below) was developed from Attachment 1. To ensure the list of contributing causes was comprehensive, the team then reviewed the issues identified in the various reports against the contributing causes.

Recommendations and recommended corrective actions were developed to address the root and contributing causes. Attachment 2 is the list of recommended corrective actions.

Problem Statement

Sandia's nuclear safety basis process and documentation, while not resulting in unsafe operations, have not met customer expectations.

Root Cause

Sandia has failed to manage the nuclear safety basis program in a formal, systematic manner based on recognized management system standards.

Contributing Causes

1. Sandia does not have a method to identify and flow down requirements into the nuclear safety basis program. These requirements include Integrated Laboratory

Management System (ILMS), Integrated Safety Management System (ISMS), and 10CFR830[1] (Ref. 8).

For example:

- Sandia does not have a clear crosswalk or comprehensive process to flow requirements down into the program from the corporate programs such as legal, contractual, and other internal departments.
- Sandia does not have a standardized process to implement Department of Energy (DOE) standards when the underlying DOE order has not changed.

2. Sandia does not have a comprehensive program for nuclear safety basis development, documentation, and maintenance. For example, the current program does not include:

   - Guidance for hazard identification, analysis and documentation.
   - Education, training and qualification requirements for nuclear safety basis personnel.
   - Guidance for documenting control selection and justification.
   - Site boundary justification.
   - Clear definitions of roles and responsibilities.
   - Explanation for the basis of the consequence models used.
   - Early involvement of nuclear safety basis professionals in the design process.

3. Inadequate resources have been devoted to nuclear safety basis at corporate, Strategic Management Unit (SMU) and facility levels.

   For example:

   - Sandia failed to recognize the need for additional staffing in the nuclear safety basis program.
   - Sandia fails to submit deliverables on a timely basis (e.g., annual updates).

4. Nuclear safety basis has been a low priority for Sandia senior management.

   For example:

   - Sandia failed to recognize the nuclear safety basis program as a high risk program.
   - No corporate nuclear safety basis performance metrics were found.
   - No apparent action was taken on issues raised to senior management, such as resource needs.

5. The Sandia assessment programs failed to identify the issues.

   For example:

[1] Code of Federal Regulations

- No evidence was found that indicated that the results of assessments or other metrics alerted Sandia management to the conditions of the nuclear safety basis program. As one result, the Sandia Nuclear Facility Safety Committee meeting summary, dated November 15, 2004, stated "The DNFSB letter was a surprise…" (Ref. 9).
- Management assessments are not being performed of organizations responsible for the development of nuclear safety basis documentation.
- There has been no formal process to track comment resolution of technical reviews that were performed on nuclear safety basis documentation.

6. The corporate quality assurance (QA) program has not been applied consistently to the nuclear safety basis process.

   For example:
   - Nuclear safety basis program fails to recognize that 10CFR830, Subpart A (Ref. 8; i.e., QA) applies.
   - At least four separate QA plans apply to programmatic elements. The team found no evidence that a gap analysis had been performed to ensure that the nuclear safety basis program meets QA requirements.
   - Nuclear safety basis program does not implement all aspects of the Center 6300 QA Plan (Ref. 10; e.g., records retention, documented procedures).
   - Facility QA programs have not been applied to the development of nuclear safety basis documents.

7. Vertical and horizontal communications within Sandia were not fully defined and utilized.

   For example:
   - Customer concerns expressed to Sandia regarding nuclear safety basis issues were not communicated to all individuals responsible for nuclear safety basis document development.

8. The channels of communication between Sandia and SSO have not been deliberate, rigorous, and formal. There has been an over-reliance on informal verbal communications resulting in misunderstandings.

   For example:
   - There has been a lack of formality in communications, including standards for formal documentation and deliverables.
   - There is no formal change control process for schedules and standards.

9. Sandia has not taken advantage of Lessons Learned from analogous Environmental, Safety, and Health (ES&H) programs within Sandia, or from nuclear safety basis programs throughout the DOE complex.

Recommendations

The team makes the following recommendations:

Note: The order of these recommendations is not time sequenced.

1. Continue to operate under existing DSAs while implementing short term corrective actions to address immediate concerns, such as the site boundary issue.
2. Perform an in-depth regulatory review of the current nuclear safety basis program against applicable requirements, including Price-Anderson Amendments Act (PAAA) rules.
3. Develop an education, training, and qualification program for nuclear safety basis personnel.
4. Benchmark nuclear safety basis programs within the DOE complex.
5. Develop updated, technically defensible DSAs for Annular Core Research Reactor (ACRR), Sandia Pulsed Reactor (SPR), Auxiliary Hot Cell Facility (AHCF), and Transportation. Review the Gamma Irradiation Facility (GIF) and Manzano Nuclear Facility (MNF) DSAs for possible updates.
6. Develop a vision for a nuclear safety basis program that satisfies the results of recommendation #2.
7. Select a management system to use in developing and implementing actions to achieve the vision in a systematic manner that addresses the root and contributing causes.
8. Develop and implement a project plan that includes cost, schedule, and resource allocation necessary to achieve the vision.
9. Based on the inconsistent implementation of the ISMS and QA programs observed in the nuclear safety basis program, the team recommends a Sandia-wide review of ISMS and QA be conducted including nonnuclear safety basis.

Additional Observations

The problems identified within the nuclear safety basis program may be symptomatic of broader issues in the way Sandia prioritizes resources and makes management decisions.

Sandia should investigate other possible contributing causes such as:

- Sandia's culture for continuous quality improvement.
- Sandia's allocation of resources for other compliance activities.
- Accountability for rigorous application of requirements.

The team did not investigate these issues in depth.

Team Members and Support Consultants

Team Members

Ron Simonton, Team Leader
Suzanne Weissman, Root Cause Analyst
Donald Duggan, Team Member
Donald Lincoln, Team Member
Steve Ward, Team Member
Caren Wenner, Team Member
Lisa Polisar, Technical Writer/Editor

Team Biographies

Ron Simonton is currently the manager of Price-Anderson Nuclear Safety Rules and Defense Nuclear Facilities Safety Board Integration Department (6004) and former manager of Technical Area V (TA-V) Nuclear Facilities, Nuclear safety basis and Engineering Support (6780) at Sandia. Prior DOE and NNSA experience includes serving as the DOE/NNSA Sandia Site Office Senior Science and Technical Advisor and Team Lead for Facility Representative and Nuclear Safety Basis Programs.

Suzanne H. Weissman is currently the manager of the ES&H, QA, and Security Management Department for the Energy, Information and Infrastructure Surety Division (6000) at Sandia. She is a trained root cause analyst and has lead many root cause analyses for a variety of ES&H and security incidents at Sandia. Prior to her current position, she was a member of technical staff and managed several Sandia organizations involving analytical chemistry and related fields. She has a Ph.D. in Analytical Chemistry from the University of Illinois.

Donald Duggan is currently the manager of the Los Alamos office of Alion Science and Technology. He is responsible for all the work performed by the office, including Authorization Basis, Quality Management, Project Management and Manufacturing services. He is responsible for Alion services in implementing the DSA and Technical Safety Requirements (TSRs) for TA-55, and for services supporting DSA and TSR development for other facilities at Los Alamos National Laboratory (LANL) and the Nevada Test Site. Dr. Duggan has over 20 years of experience of safety basis development and implementation for high-hazard facilities. Dr. Duggan holds a B.Sc. Degree from Leeds University and a D. Phil from Oxford University. He is a licensed professional engineer in New York and California, and holds an active DOE Q clearance.

Donald Lincoln is currently the manager of the Nuclear Applications Division for Alion Science and Technology. He is responsible for all of the commercial nuclear power consulting and analysis work performed by Alion. In addition, he supports the Sandia Facilities Management and Operations Center in tracking and reporting their NNSA/SSO performance measures and other projects. Mr. Lincoln holds a BS and MS in Mechanical

Engineering from University of Nebraska. He earned a Senior Reactor Operator's license at Cooper Nuclear Station. He is a licensed Professional Engineer in Nebraska, Wisconsin, Illinois and Indiana and holds an active DOE "L" Clearance.

Steve Ward is currently the manager of Facilities and SMU Partnerships Department (10856) and former manager of the corporate QA Program and the Integrated Laboratory Management System Project; former Manager of the PAAA Program; former program manager of the Air, Water, Waste, and Pollution Prevention Programs; former manager of the Hazardous Waste Program; and former manager of the Environmental Compliance and Quality Assurance Department, at Sandia. Prior Sandia experience includes six years in the Explosives Components Department (2510) and three years in the Interfacial Chemistry and Coatings Technology Research Department (1841).

Caren Wenner is currently a principal member of the technical staff in the Reliability and Human Factors Department (12335), part of the Surety Assessment Center (12300), at Sandia. Since joining Sandia, she has been involved in various projects for the FAA, including the design of work processes for the FAA's surveillance program. She is also involved in projects relating to usability assessment, human reliability assessment, and human error prevention and mitigation. She has a Ph.D. and M.S. in Industrial Engineering/Human Factors and a B.S. in Mechanical Engineering. Dr. Wenner served as a team member for the AHCF operational readiness review (ORR), the deputy team leader for the SPRF/CX ORR, and the team leader for the ACRR readiness assessment (RA).

Lisa Polisar is currently a technical writer/editor for the Sandia Safety Basis Department (6326) at Sandia. Lisa has fifteen years of technical writing experience in the fields of architecture, engineering, industrial safety and marketing. She has written strategic marketing plans, reports, web content, user's manuals, and technical documentation at SNL. As a multi-published author, she has published feature and technical articles for trade and commercial magazines, two commercial mystery novels, art reviews, and short fiction. She is currently the fiction editor of two literary journals, staff writer of several magazines, a college-level writing instructor and an award-winning journalist. Lisa holds a Bachelor's Degree in music and behavioral psychology from University of Hartford.

Support Consultants — Subject Matter Experts (SMEs)

- Jim Bryson (6781), Manager responsible for ACRR and SPR
- Dick Coats (6783), Member of Technical Staff responsible for nuclear safety analysis
- Steve Coffing (6326), Nonnuclear Safety Basis Project Leader with Safety Basis Department
- Stacey Durham (6326), Policy and Safety Analyst for Safety Basis Department

- Ken Reil (6784), Manager of Applied Nuclear Technologies Department
- Ron Seyler (6782), Manager responsible for GIF and AHCF
- John Shaw (6326), Manager of Safety Basis Department
- Mike Spoerner (6339), Project Lead responsible for Manzano Nuclear Facility
- Jim Thompson (6339), Manager of Radioactive Waste/Nuclear Material Disposition Department
- Sharon Walker (12305), Former Manager of Department 6783 and Manager of Information and Management Systems Department
- Dann Ward (6326), Nuclear Safety Basis Project Leader with Safety Basis Department
- Donald Wille (6783), Consultant from Perot System Government Services responsible for TA-V safety analysis document review
- Joel Williams (6326), Consultant from Washington Safety Management Solutions responsible for safety analysis document review

References and Reviewed Documents

1. Independent Evaluation of Field Element Performance Final Report (labeled DRAFT), Emil Morrow, Team Leader; dated December 10, 2004.
2. DNFSB Staff Issue Report from D. Nichols; subject: Inadequate Documented Safety Analyses at Sandia National Laboratories; dated August 12, 2004.
3. Letter from John T. Conway, Chairman of DNFSB, to Linton Brooks, NNSA Administrator; dated September 27, 2004.
4. Memorandum from Patty Wagner, Manager of NNSA/SSO to Michael Zamorski, Acting Technical Director, Nuclear Facilities & Nuclear Safety Basis; subject: Independent Review of Nuclear Safety Basis; dated December 16, 2004.
5. National Nuclear Security Administration FY04 Performance Evaluation Report of Sandia National Laboratories; December 9, 2004.
6. Systemic Factors Analysis (SFA); root cause analysis tool, available at http://www-irn.sandia.gov/esh/rca_prgrm/3100/sys_factor_analy.htm (formerly Attachment 22B-1 from Sandia's CPR400.1.1/MN471001, *ES&H Manual*)
7. Principles and Methods for Collecting Information During Root Cause Analysis; available at http://www-irn.sandia.gov/esh/rca_prgrm/3100/principles_methods.

htm (formerly Attachment 22B-2 from Sandia's CPR400.1.1/MN471001, *ES&H Manual*)

8. Nuclear Safety Management Final Rule, 10CFR830; Federal Register, Vol. 66, No. 7; dated January 10, 2001.
9. Memorandum from J. W. Bryson, 6881, Secretary, and M. G. Zimmerman, Recorder, to L. E. Shephard, 6000; subject: Sandia Nuclear Facilities Safety Committee (NFSC) Meeting Summary, of the October 28, 2004 Meeting (N 04/5); dated November 15, 2004.
10. ES&H and Emergency Management Center, 3100 Quality Assurance Plan (QAP); PLA 02-01, Revision 02; Effective Date: February 9, 2004.
11. Letter from J. F. Loye, Group Manager, Nuclear Facility Operations, to Mike Zamorksi, Acting Technical Director, Nuclear Facilities and Nuclear Safety Basis, SSO; subject: Restart Activities of the Sandia Pulsed Reactor Facility and Schedule for the Review of the Annual Update of the Safety Analysis Report; dated December 15, 2004.
12. Letter from Jack Loye, Level II Manager, ES&H, to Mike Zamorksi, Technical Director, Acting, Nuclear Facilities and Nuclear safety basis, SSO; subject: Independent Evaluation Team (IET) Report Factual Accuracy Review; dated December 20, 2004.
13. Letter from Robert Brandhuber, Level II Manager, TA-V Nuclear Facilities, to Mike Zamorksi, Technical Director, Acting, Nuclear Facilities and Nuclear safety basis, SSO; subject: Response to Memorandum dated December 16, 2004, titled "Independent Review of Nuclear safety basis"; dated December 20, 2004.
14. Set of viewgraphs entitled, "The Path Ahead to Improve SNL Nuclear Safety Basis Processes, an Interim Report, for Presentation to DNFSB."
15. Memorandum from M. T. Ryan, J. W. Poston, Sr., and T. A. Ikenberry to T. P. Laiche; subject: External Advisory Board (EAB) Meeting of October 25-28, 2004; dated November 16, 2004.
16. Fiscal year 2005 Performance Evaluation Plan (PEP) for Sandia National Laboratories; October 2004.
17. Draft report entitled, "The Path Ahead to Improve SNL Nuclear Safety Basis Processes, an Interim Report," Submitted to the Defense Nuclear Facility Safety Board by Sandia National Laboratories; (A work in progress); dated December 3, 2004.
18. Safety Basis Department Program Plan, PLA 04-17, *Corporate Nuclear Safety Basis Plan*; Revision 00; Effective December 2, 2004.
19. Safety Basis Department Program Plan, PLA 04-19, *Nuclear Safety Basis Adequacy Verification Criteria: Focused Topics for Nuclear Documented Safety Analyses (DSAs)*; Revision 00; Effective December 20, 2004.
20. Memorandum from J. W. Bryson, 6881, Secretary, and R. E. Naegeli, Recorder, to L. E. Shephard, 6000; subject: Sandia Nuclear Facilities Safety Committee (NFSC) Meeting Summary, of the April 27, 2004 Meeting (N 04/3); dated May 6, 2004.
21. "Best in Class" (BIC) Description for the Future-State of ES&H Performance at Sandia National Laboratories; December 3, 2004.

22. Project plan entitled, "Sandia National Laboratory (sic); Department 6000 Nuclear Safety Basis Root Cause Analysis Team Evaluation Schedule (8/2004-10/2006)"; supplied by Safety Basis Department (6326).
23. Risk Matrix for 6300 ES&H "Home Base"; Approved by L. A. West on July 27, 2004.
24. Risk Matrix for ES&H CPS 400.1; Approved by L. A. West on July 27, 2004
25. IES SMU Risk Watch List; June 2004.
26. Risk Matrix for the IES SMU (FY05 Risk Watch List); November 2004.
27. ES&H and Emergency Management Plan, PLA 04-13, *ES&H and Emergency Management Center 6300 Strategic Plan*; Revision 00; Effective July 12, 2004.
28. ES&H and Emergency Management, Center 6300 Balanced Scoreboard, 6300 Strategic Plan Performance Objectives; Results as of September 2004.
29. ES&H and Emergency Management, Center 6300 Line-of-Sight for FY05 Planning; Results as of August 27, 2004.
30. TA-V Surveillance Guidance Card, Number SB-02, Topical Area "Safety Basis"; Revision 0; Dated October 21, 2003.
31. Energy, Information, & Infrastructure Surety, Division 6000 Organization Chart; Results as of December 2004.
32. Sandia Research Reactor and Experimental Programs Plan, RREP – QAPP; *Quality Assurance Program Plan*; Revision 13; Effective September 21, 2004.
33. CPR400.1.1/MN471001, *ES&H Manual*, Section 13C, "Authorization Basis Process"; Issue H; Effective May 18, 2003.

COPY

Approved by:
Root Cause Analysis Team

1/7/05
Ron Simonton, Chair — Date

1/7/05
Steve Ward — Date

1/7/05
Suzanne Weissman — Date

1/7/05
Caren Wenner — Date

1/7/05
Donald Duggan — Date

1/7/05
Lisa Polisar — Date

1/7/05
Donald Lincoln — Date

Concurrence by:
Safety Basis Department Manager

1-7-05
John Shaw — Date

Attachment 1
Causal Factors

The following items from the SFA were determined to be relevant.

1.1 Was the identification and interpretation of requirements adequate?
- We don't know if current nuclear safety basis program meets ISMS and Subpart A requirements
- We don't know all of the requirements and expectations for DSAs
- We have not provided for ourselves an internal set of requirements and guidelines for how we are going to write these documents
- Prior culture has tolerated informal agreements – this practice is not in keeping with corporate expectations

1.2 Were the overall goals, objectives and policies adequate?
- Goals, objectives and policies in the SB program were not formalized
- ES&H goals objectives and policies weren't implemented consistently
- Line organization's goals, objectives and policies were not formalized
- Defining how to do SB from existing resources (Section 13C, ES&H Manual) is out of date and inadequate
- Low formality designation resulted in poor integration of quality requirements

1.3 Were the organizational structure, resources, functional responsibilities, levels of authority, and interface requirements adequate?
- Unclear roles and responsibilities
- No existing Sandia standards for doing DSAs
- Lack of personnel
- Poor change management
- Lack of qualification/training program for personnel
- IES and nuclear weapons budget constraints

1.4 Was the implementation of management plans adequate?
- Lack of proper monitoring, tracking and closure of corrective actions
- Changes and differences in formality
- Lack of clarity in how senior management holds SNL accountable
- Schedule constraints based on unrealistic expectations and lack of planning guidelines

1.5 Were the identification, evaluation and control of hazards and risks adequate?
- The risks of the SB program were not well understood and, therefore, not well managed
- The hazards and risks involved in the operation of nuclear facilities was well understood but not well explained

- Lack a consistent hazard analysis process
- External questioning of administrative vs. engineering controls

1.6 Was the assessment of operations adequate?
- Limited assessments of SB programs were performed but inadequate
- No line assessments of SB process
- Did not fully meet Criterion 10 of QA criteria
- Management organizations responsible for SB lacked adequate reviews of SB process

3.5 Is procurement of services (internal and external) adequate?
- External controls are more rigorous than internal
- Criteria for selection are poorly documented

4.1 Was the format and content of the written procedure or guidance adequate?
- No nuclear safety basis program plan (PLA04-17) until 12/04
- See 1.2 bullet #4
- Content of 6300 QA plan is not adequate
- Need to check on applicability of 6700 QA plan to SB
- Developing and maintaining SB documents is inadequate – plans underway for developing and maintaining

4.2 Was a written procedure or guidance developed and available for use?
- The GN documents have not been flowed down to local operating procedures

4.3 Was a written procedure or guidance used properly
- 6300 QA Plan not always used properly – example records
- Some of plans haven't been in existence long enough to determine their effectiveness

5.1 Was the testing, maintaining qualifications, or documenting qualifications of personnel adequate?
- There is currently no qualification program
- No existing standards for qualification of personnel in this area
- Lack of utilization of existing qualified SMEs
- Heavy dependence on experienced safety basis professionals

5.2 Was the development of training material adequate?
- A SB departmental initiative is in place to develop a qualification program
- Lack of training programs in line organizations

5.3 Were the education, work experience, or training levels of personnel adequate?
- There are no existing criteria available to evaluate this

6.1 Was the verbal presentation or exchange of information adequate?

- Disconnects in management chain regarding SB concerns
- No established lines of communication between working groups
- Misunderstanding by 6700 of role of some 6300 contractors
- Communication of concerns and risks to management was inadequate
- Lack of communication up to senior management for possible discussion with SSO
- Effective communication between 6326 and IES SMU is lacking
- Lack of formality in communications, including formal documentation, with SSO Decision was made, but disparity between Sandia and SSO ensued
- Conflicting information between Sandia and SSO

6.2 Was the performance of work adequate?

- Inadequate documentation (see Problem Statement)

Attachment 2
Recommended Corrective Actions for Nuclear Safety Basis Program

		Causes Addressed										
No.	**What**	**Root**	**1**	**2**	**3**	**4**	**5**	**6**	**7**	**8**	**9**	**Comments**
A-1	Establish management responsibilities for overseeing and implementing these recommended corrective actions.											These are general actions that should be performed in order to effectively implement the actions contained in this report.
A-2	Ensure that corrective actions are developed and implemented for each of the issues identified in the IET, DNFSB letter, and the FY04 Performance Evaluation Report.											These are actions to address near term issues. These actions are not intended to address the root cause or contributing causes.
A-3	Determine what regulatory requirements are applicable to the nuclear safety basis program including all applicable QA requirements as found in 10CFR830 Subpart A.	**X**	**X**				**X**	**X**				
A-4	Perform an in-depth regulatory review of the current nuclear safety basis program against each applicable requirement and perform a gap analysis.	**X**	**X**				**X**					
A-5	Provide the results of the in-depth regulatory review to the PAAA Nuclear Safety Rule Department (6004) for review against reporting requirements.		**X**				**X**					
A-6	Develop and implement a corrective action plan to address issues identified by the gap analysis.		**X**				**X**					
A-7	Perform a training needs analysis for the nuclear safety basis program.			**X**								

No.	What	Root	1	2	3	4	5	6	7	8	9	Comments
A-8	Develop and implement an education, training, and qualification program for safety basis personnel.			X	X							
A-9	Develop and implement a benchmarking program to define best business practices for the nuclear safety basis program.			X		X					X	
A-10	Perform an in-depth analysis of all current DSAs to identify any potential additional issues that need to be brought into compliance and develop a project schedule for these analyses.											These are actions to address near term issues. These actions are not intended to address the root cause or contributing causes.
A-11	Develop and implement a process to report nuclear safety basis program performance metrics to senior management on a quarterly basis.					X			X			
A-12	Develop a proposal for a Change Control Board that includes both Sandia and SSO to promote more effective communications on nuclear safety basis issues and decisions.									X		
A-13	Develop a vision that clearly identifies the level of performance to use to achieve best-in-class for the nuclear safety basis program.	X		X								
A-14	Select a management system to achieve the vision and to implement a comprehensive nuclear safety basis program that provides assurance that operational hazards have been adequately analyzed and controlled. • Review ISMS • Review ILMS • Additional systems that may be considered: o ISO 9000 o Baldrige National Quality	X		X					X			

No.	What	Root	1	2	3	4	5	6	7	8	9	Comments
A-15	Develop and implement a project plan that includes cost, schedule, and resource allocation necessary to achieve the vision of the new nuclear safety basis program.	X	X	X	X	X	X	X	X	X	X	
A-16	Develop a process to perform an annual resource allocation needs analysis to maintain and continuously improve the new nuclear safety basis program.	X			X							
A-17	Assess Sandia-wide ISMS implementation including nonnuclear safety basis and develop corrective actions, if appropriate.		X									
A-18	Assess Sandia-wide QA implementation including nonnuclear safety basis and develop corrective actions, if appropriate.							X				

Attachment C

Site Boundary Considerations

Recommendations from several reviews have suggested that site boundary for SNL TA-V nuclear facilities be reevaluated. The site boundary issue raised by the IET and DNFSB is focused on whether NNSA/SNL have control of the exclusion area. Issues associated with the language in the safe harbor documents and applicable definitions in Title 10 of the Code of Federal Regulations (CFR) have been raised and SNL's interpretation of the site boundary has been provided to NNSA/SSO and is summarized herein.

Recent reviews also identified Air Force support personnel that reside at the KAFB stables. Although similar to the continuously occupied locations at the KAFB munitions storage facility, and the KAFB fire station located within the TA-V exclusion area, the residence of this support person and family were unknown and not identified in the TA-V DSAs. This issue has highlighted the degree of control NNSA and SNL have over the exclusion area. Restricting the area under which NNSA and SNL must exercise control would reduce the boundary from the 3000 meters currently assumed in the TA-V DSAs.

For insight into the issue of defining a facility site boundary, the 10 CFR Part 830 and the applicable safe harbor methodology were reviewed. Part 830 is silent on site boundary definition, and it does not reference a process for determining a facility site boundary. For the ACRRF and SPRF, which are DOE reactors, 10 CFR Part 830, Subpart B, Appendix A notes that U.S. Nuclear Regulatory Commission, Regulatory Guide 1.70 (NRC Reg Guide 1.70), "Standard Format and Contents of Safety Analysis Reports for Nuclear Power Plants" (Ref 5), may be used to prepare their DSAs. NRC Reg Guide 1.70 is considered a safe harbor methodology for DOE Reactors to implement the requirements of 10 CFR 830 Subpart B.

NRC Reg Guide 1.70 states, in section 2.1.1, "Site Location and Description" that:

> "Site" means the contiguous real estate on which nuclear facilities are located and for which one or more licensees has the legal right to control access by individuals and to restrict land use for purposes of limiting the potential doses from radiation or radioactive material during normal operation of the facilities.
>
> and
>
> 2.1.2 Exclusion Area Authority and Control
>
> 2.1.2.1 Authority. The application should include a specific description of the applicant's legal rights with respect to all areas that lie within the designated exclusion area. The description should establish, as required by paragraph 100.3(a) of Part 100, that the applicant has the authority to determine all activities, including exclusion and removal of personnel and property from the area. The status of mineral rights and easements within this area should be addressed.
>
> If ownership of all land within the exclusion area has not been obtained by the applicant, those parcels of land not owned within the area should be clearly described by means of a

> scaled map of the exclusion area, and the status of proceedings to obtain ownership or the required authority over the land for the life of the plant should be specifically described. Minimum distance to and direction of exclusion area boundaries should be given for both present ownership and proposed ownership. If the exclusion area extends into a body of water, the application should specifically address the bases upon which it has been determined that the authority required by paragraph 100.3(a) of Part 100 is or will be held by the applicant.

The Reg Guide 1.70 passage cites definitions from Title 10 of the CFR, which is its governing regulation. 10 CFR 20.1003 defines the site boundary as:

> "that line beyond which the land or property is not owned, leased, or otherwise controlled by the licensee."

Other Parts of the CFR cited in the Reg Guide 1.70 include 10 CFR 50.2 and 10 CFR 100.3. These regulations define the term Exclusion Area as:

> "that area surrounding the reactor, in which the reactor licensee has the authority to determine all activities including exclusion or removal of personnel and property from the area. This area may be traversed by a highway, railroad, or waterway, provided these are not so close to the facility as to interfere with normal operations of the facility and provided appropriate and effective arrangements are made to control traffic on the highway, railroad, or waterway, in case of emergency, to protect the public health and safety. Residence within the exclusion area shall normally be prohibited. In any event, residents shall be subject to ready removal in case of necessity. Activities unrelated to operation of the reactor may be permitted in an exclusion area under appropriate limitations, provided that no significant hazards to the public health and safety will result."

Consistent with the above definitions, and as has been historically the case at SNL TA-V, radiological consequences calculated from the accident analyses have been estimated for the "exclusion boundary" per Section 15.x.x.5 of Reg guide 1.70. The exclusion boundary was set at 3000m, as this was the closest approach of the KAFB site boundary to TA-V. Since DOE has emergency management agreements with KAFB, this level of control has traditionally been deemed to meet the intent of the 10 CFR 20.1003 required "… or otherwise controlled."

This approach is similar to the method recommended by DOE-STD-3009-94-CN2, "Preparation Guide For U.S. Department Of Energy Nonreactor Nuclear Facility Documented Safety Analysis Reports" Change Notice 2, which is required for DOE non-reactor nuclear facilities by 10 CFR 830, Subpart B, Appendix A. Appendix A of the DOE-STD-3009 states:

> "DOSE CALCULATION LOCATION. For the purposes of comparison to the [evaluation guideline] EG, the comparison point is take to be the location of a theoretical MOI standing at the site boundary."

As noted above the requirements in 10 CFR Part 830 are silent on site boundary definition, however the guidance in DOE-STD-3009 defines the site boundary as:

> "A well-marked boundary of the property over which the owner and operator can exercise control without the aid of outside authorities. For the purpose of implementing this Standard, the DOE site boundary is a geographic boundary within which public access is controlled and activities are governed by DOE and its contractors, and not by local authorities. A public road traversing a DOE site is considered to be within the DOE site boundary if, when necessary, DOE or the site contractor has the capability to control the road during accident or emergency conditions."

As discussed by the DNFSB, these words are more restrictive than those in Reg Guide 1.70 and 10 CFR 20.1003, and should have been used in developing the DSAs for AHCF (and other non-reactor nuclear facilities). However, SNL has historically identified a 3000-meter exclusion area boundary around the TA-V nuclear facilities using the safe harbor methodologies; as it appeared logical to use the same boundary for all TA-V facilities—as they are virtually co-located. The Evaluation Guideline (EG) as defined by Appendix A of DOE-STD-3009 is applied at this 3000-meter distance, thus, the term exclusion area boundary has been applied in a similar manner as "site boundary" defined in DOE-STD-3009.

In addition, the following pertinent information is provided:

- SNL/NM is a major NNSA facility located on a U.S. military installation. As such, the NNSA is effectively a tenant on Department of Defense owned land. Existing agreements, memoranda of understanding (MOU), and emergency plans provide for a close and cooperative operating relationship between KAFB, NNSA/SSO, and SNL/NM. This decades-long close relationship and planning ensures the prompt notification of emergency responders, the effective communication of protective action recommendations, and the safety of onsite personnel and members of the workforce.

- The IET observed a drill during their review which demonstrated that SNL and KAFB have effective communication and control of the TA-V exclusion area. Further, SNL is working through NNSA with the Air Force to develop and implement more formal and rigorous means of informing individuals within the exclusion area at the stables and the golf course of emergency procedures and refining the capability to implement protective actions, if necessary.

- The communication between the Air Force and NNSA will be strengthened to ensure the process KAFB invokes to propose or site new activities within the SNL/NM exclusion areas is considered for NNSA safety basis and emergency planning purposes. Recommended approaches that may be considered by NNSA to ensure that future Department of Defense activities are considered in the safety basis and emergency management programs include:
    - Negotiation of a MOU between NNSA and the U.S. Air Force for formal notification of any proposed structures or activities within the established exclusion areas, or
    - Development and implementation of a process to periodically review and evaluate the activities conducted by the Department of Defense within the established exclusion areas.

SNL Commitments and Actions

1. In accordance with recent direction from SSO, SNL will put in place an action plan to resolve the site boundary issue, incorporate the technical basis in TA-V DSAs, and rework the hazard and accident analyses when the new boundary is finalized.

2. Aggressively pursue agreements through NNSA with KAFB to establish a more formal and rigorous means of informing and protecting personnel that may be at the golf course or riding stables in the event of an nuclear emergency. NNSA/SSO has obtained a verbal agreement with the KAFB Commander to relocate the resident personnel supporting the base stables.

3. Put in place compensatory measures and administrative controls that substantially reduce the risk to the public and co-located workers while the boundary decision is being finalized.

Attachment D

Issues and Considerations Involved with the Transition of Selected ACRR Structures, Systems, and Components to a Safety Class Status

A White Paper Analysis

Nuclear Reactor Facilities Department
Sandia National Laboratories

January 7, 2005

Summary and Conclusions

Based upon a survey of the accident scenarios analyzed in the ACRR Documented Safety Analysis (DSA), the following prevention/mitigation safety functions have been identified as candidates for transition to Safety Class[1] status:

- Reactor Protection System: This system would detect abnormal reactor transients and scram the reactor before damage can occur to the fuel or its cladding (thus, preventing the release of radioactive material), and
- Active Confinement System: Confinement structure and ventilation system which direct any released radioactive material through a filtration system (thus, minimizing the amount of radioactive material which is ultimately released to the environment).

The term *transition* has been used here because facility structures, systems, and components (SSCs) cannot simply be declared to be Safety Class. In order to declare SSCs to be Safety Class, design criteria specified by DOE as requirements for Safety Class SSCs must be addressed. The DOE design criteria for Safety Class SSCs are included in DOE Order 5480.30, "Nuclear Reactor Safety Design Criteria." The SSCs at ACRR were not originally designed with the intent of being declared as Safety Class. Therefore, the design status of the SSCs necessary to carry out the safety functions noted above were assessed against the design criteria applicable to Safety Class in DOE Order 5480.30.

The conclusion of this assessment was that the Reactor Protection System safety function could be accomplished by SSCs associated with the ACRR's Plant Protect System (PPS). These SSCs could be transitioned to Safety Class status. However, this transition would have to occur over an estimated 18-24 month time frame, at a potential cost ranging from $2M to $6M. The variation in the cost estimate is due to the potential for major modifications to the control/safety elements, core grid and support structure, and/or the control room and Highbay structures. It should be noted that a firm cost/schedule estimate could only be established based on an in-depth analysis and evaluation of the needs for modifications to meet Safety Class design requirements of 5480.30.

The transition work essentially amounts to a design basis reconstitution (see DOE Standard 1073-2003) of the PPS and its supporting equipment. Issues include the seismic qualification of the PPS, control/safety elements, the reactor core grid structure, and the control room and Highbay building structures, quality assurance pedigree for older components, fire protection studies, human factors studies, and impacts of failures in co-located non-Safety Class equipment. It is anticipated that these studies would result in the need for some modifications to the PPS and/or its supporting equipment. Not only must these studies and potential modifications be completed, but the resulting documentation must be incorporated into an integrated design configuration management and system engineering program to ensure the continued maintenance and reliability of these SSCs. Lastly, this information must be appropriately incorporated into the safety basis (DSA and TSR) of the facility to be approved by DOE.

It is vital that this transition work occur prior to "declaring" the SSCs as Safety Class. Otherwise, the ACRR facility would become immediately vulnerable to significant audit findings from the DOE Office of Assessment and/or the Defense Nuclear Facility Safety Board, while the transition work is underway.

Another conclusion of this assessment was that the Active Confinement System safety function (which would be accomplished by SSCs associated with the ACRR Highbay (Bldg. 6588, Room 10) and the Highbay Ventilation System) could not be transitioned to Safety Class. One major issue is the seismic

[1] Note that the decision on whether any ACRR SSCs must ultimately be declared as Safety Class is outside the scope of this paper, and that it is not the intention of this paper to make any recommendations on that matter.

qualification of the Highbay itself. In order to provide active confinement, it is necessary that the Highbay survive a design basis earthquake (DBE). The DSA currently states that the structure would not likely survive such an event. In addition, the Highbay Ventilation System (HBVS) ductwork, filters, and fan must also continue operating following a DBE. Thus, transitioning to Safety Class status would involve major redesign and reconstruction of the Highbay and the HBVS.

Supporting Information

The following provides the supporting information and rationale for the preceding Summary and Conclusions statement.

Survey of ACRR Accident Analyses and Selection of Preventative/Mitigative Safety Functions

The DSA for the ACRR presents accident analyses for selected events from the hazard analysis. The accidents analyzed in the DSA fall into the following categories: (a) Reactor Accidents, (b) Experiment Accidents, (c) Drops and Facility Fire, and (d) External Events/Natural Phenomena. DOE-STD-3009 prescribes an Evaluation Guideline of 25 rem at the site boundary. Preventative or mitigative SSCs credited in an accident analysis are to be declared as Safety Class if the accident dose "challenges" the Evaluation Guideline.

For the accident categories listed above, specific administrative controls which prescribe limits on the material-at-risk allowed in a facility or in an experiment are the most straightforward means[2] of achieving a low dose at the site boundary for all of the accident categories except for reactor accidents. Therefore, the discussion in this white paper will focus upon the reactor accidents category. In the reactor accidents category, the Table 1 shows the individual accidents within this category which are analyzed in the ACRR DSA.

Table 1. Reactor Accidents (RA) Analyzed in the ACRR DSA.

Accident	Unmitigated Dose* at a 3000 m Site Boundary
RA-1: Uncontrolled Regulating Rod Withdrawal	2.53 rem
RA-2: Regulating Rod Withdrawn Too Fast	5.42 rem
RA-3: Pulse or TRW From High Power	2.53 rem
RA-4: Greater Than Planned Reactivity Addition	2.53 rem
RA-5: Loss of Heat Sink	0.50 rem
RA-6: Partial Loss of Pool Water	0.50 rem
*Note that these dose estimates do not account for interim compensatory measures (e.g., limiting ACRR maximum power level) being proposed in a separate white paper.	

From the table, it is apparent that the Loss of Heat Sink and Partial Loss of Pool Water present the least potential challenge to the Evaluation Guideline. Therefore, this paper will focus upon Reactor Accidents 1 through 4 (i.e., RA-1, RA-2, RA-3, and RA-4 of Table 1). RA-1 and RA-2 deal with reactivity additions caused by withdrawal of regulating rods in an uncontrolled manner and at an undesirable rate. RA-3 and RA-4 deal with pulse (i.e., instantaneous) reactivity additions from undesirable initial conditions or of an excessive magnitude, respectively.

The next step is to determine effective prevention/mitigation strategies for these events. For Reactor Accidents 1 through 4, effective prevention/mitigation strategies include:

- Reactor Protection System (RPS): This system would detect abnormal reactor transients and scram the reactor before damage can occur to the fuel or its cladding (thus, preventing the release of radioactive material),

[2] This is not to rule out other potential engineering controls which can be effectively used to prevent or mitigate the consequences of accidents which impact experiments or other materials stored/processed at a facility.

- Maximum Initial Power/Temperature (MIPT) for a Pulse: Specific Administrative Controls which are included in the TSR to specify the initial power and temperature above which a reactor pulse cannot be conducted (thus, preventing a pulse addition which could lead to the release of radioactive material),
- Maximum Allowable Pulse Reactivity (MAPR): Specific Administrative Controls which are included in the TSR to limit the amount of reactivity available for addition by the reactor's pulse addition system or TRW system (thus, preventing a pulse addition or TRW which could lead to the release of radioactive material), and
- Active Confinement System (ACS): Confinement structure and ventilation system which direct any released radioactive material through a filtration system (thus, minimizing the amount of radioactive material which is ultimately released to the environment).

The RPS, MIPT, and MAPR are preventative safety functions which protect the primary barrier to radioactive material release—the fuel and its cladding. The ACS is a mitigative safety function, which minimizes the amount or radioactive material released from the facility. Per DOE-STD-3009, preventative safety functions are preferred to mitigative safety functions in a hierarchy of controls.

Table 2 shows the effect of these safety functions upon the ACRR DSA reactor accidents.

Table 2. Impact of Prevention/Mitigation Strategies upon Reactor Accidents.

Accident	Impact of Prevention/Mitigation Strategy
RA-1: Uncontrolled Regulating Rod Withdrawal	• RPS: As described in DSA, an RPS would monitor reactor power level; scram the reactor; prevent fuel damage; and preclude the release of radioactive material. • MIPT: Not applicable. • MAPR: Not applicable. • ACS: An ACS in this scenario would serve as defense-in-depth to the RPS.
RA-2: Regulating Rod Withdrawn Too Fast	• Same as RA-1
RA-3: Pulse or TRW From High Power	• RPS: Not Applicable. In general, an RPS would be ineffective for a pulse (i.e., essentially instantaneous) reactivity addition event. • MIPT: As described in DSA, an MIPT would preclude a pulse or TRW when core conditions exceed the MIPT, preventing fuel damage; and preclude the release of radioactive material. • MAPR: The MAPR would be used to restrict potential pulse or TRW additions to within the values analyzed in the DSA accident analysis to preclude fuel damage and the release of radioactive material. • ACS: An ACS in this scenario would serve as defense-in-depth to the MIPT and MAPR.
RA-4: Greater Than Planned Reactivity Addition	• Same as RA-3

SSCs Needed to Accomplish Preventative/Mitigative Safety Functions

The following discussion describes the SSCs necessary to accomplish the safety functions defined above. The descriptions are not intended to be exhaustive, but rather to establish a high level picture of individual SSCs associated with each safety function. The Maximum Initial Power/Temperature for a Pulse (MIPT), and the Maximum Allowable Pulse Reactivity (MAPR) safety functions would be accomplished via Specific Administrative Controls rather than equipment. Thus, only the Reactor Protection System and Active Confinement System safety functions are discussed in the following.

Reactor Protection System

For the ACRR, the RPS safety function is accomplished via the Plant Protect System (PPS) and some of its associated systems and components, which are described in Chapter 7 of the ACRR DSA. The PPS monitors reactor power via a reactor power detector. If reactor power exceeds a preset limit, the PPS actuates a bi-stable trip relay which removes power from the control/safety rod connecting magnets. When power is removed from the magnets, the control/safety rods fall, and the neutron poison sections of the rods are inserted into the reactor core region. This terminates the reactor power transient, and places the reactor in a shutdown condition. Provided that trip setpoints are appropriately set, the PPS can terminate a reactor transient cause by RA-1 or RA-2 before any fuel or cladding damage occurs. Thus, release of radioactive material is prevented.

Table 3 presents the specific structures, systems, and components which are needed to accomplish the RPS safety function. Figure 1 shows these components and their interactions graphically. Note that on and off-site electrical power is shown in Figure 1, but are not shown as essential to the proper performance of the safety function. If electric power is lost, the loss of power to the magnets will result in the reactor being shut down, as the control/safety rods neutron poison regions fall into the core.

Active Confinement System

For the ACRR, an ACS safety function would be accomplished via the Highbay Ventilation System (HBVS) and its associated systems and components, which are described in Chapter 6 of the ACRR DSA. The HBVS requires a confinement structure in order to function as an ACS. The ACRR Highbay (Bldg. 6588, Room 10) would serve this purpose. Thus, the unmitigated release of radioactive material would prevented. It should also be noted that the ACRR Cavity Purge System[3] would also perform an ACS safety function, but its function is focused upon mitigation of release from experiments. Currently, experiment material-at-risk is being utilized to minimize potential accident dose at the site boundary. If the Cavity Purge System itself were to be considered for transition to Safety Class status, the issues and considerations would be very similar to those for the HBVS.

Table 4 presents the specific structures, systems, and components which would be needed to accomplish the ACS safety function. Figure 2 shows these components and their interactions graphically. Off-site electrical power shown in Figure 2 would be required, but an emergency power source (e.g., diesel generator) would also be required to meet single failure criteria. This emergency power source is depicted on Figure 2, but it is not currently available to the ACRR.

[3] The Cavity Purge System is also described in Chapter 6 of the ACRR DSA. It draws airflow from the ACRR's experiment placement locations (e.g., central cavity, FREC-II cavity, neutron radiography tube), and directs the flow through a filter bank (HEPA and charcoal).

Table 3. Structures, Systems, and Components Needed to Accomplish a Reactor Protection System Safety Function.

Structure/System/Component	Role in Reactor Protection System Safety Function
Reactor Power Detector	Neutron flux detector (e.g., a fission chamber or self-powered detector) which provides an electric current signal proportional to reactor power level to the PPS. These signals are supplied to the Percent Power Channels of the PPS drawers. The fission chamber detector requires a high voltage power supply for operation. This power supply is integral to the PPS.
Plant Protect System (PPS)	The PPS monitors the reactor power signal and compares it to a limit which is preset into the PPS electronics. If the power signal exceeds the preset limit, the PPS cause bi-stable relays to open and interrupt power to the control/safety rod magnet power circuits.
Console Interconnect Drawer (CID)	The CID is essentially a patch panel drawer. It performs no active functions. However, circuit pathways between the PPS and the MPS are routed through the drawer.
Magnet Power Supply (MPS)	The MPS provides the electrical power necessary to hold the control/safety rods in contact with the rod drives during normal operation. The PPS interrupts this power when a trip is initiated. When power is interrupted, the control/safety rods are decoupled from their rod drives, and are free to fall.
Control/Safety Rods	The Control/Safety Rods provide neutron poison material which is positioned within the reactor core when the rods fall. The introduction of the neutron poison material into the core terminates the reactor power transient and causes the reactor to shutdown. In order for the Control/Safety Rods to reliably fall through the core region when magnet power is cut or lost, the upper and lower grid plates must be properly aligned and fixed in place.

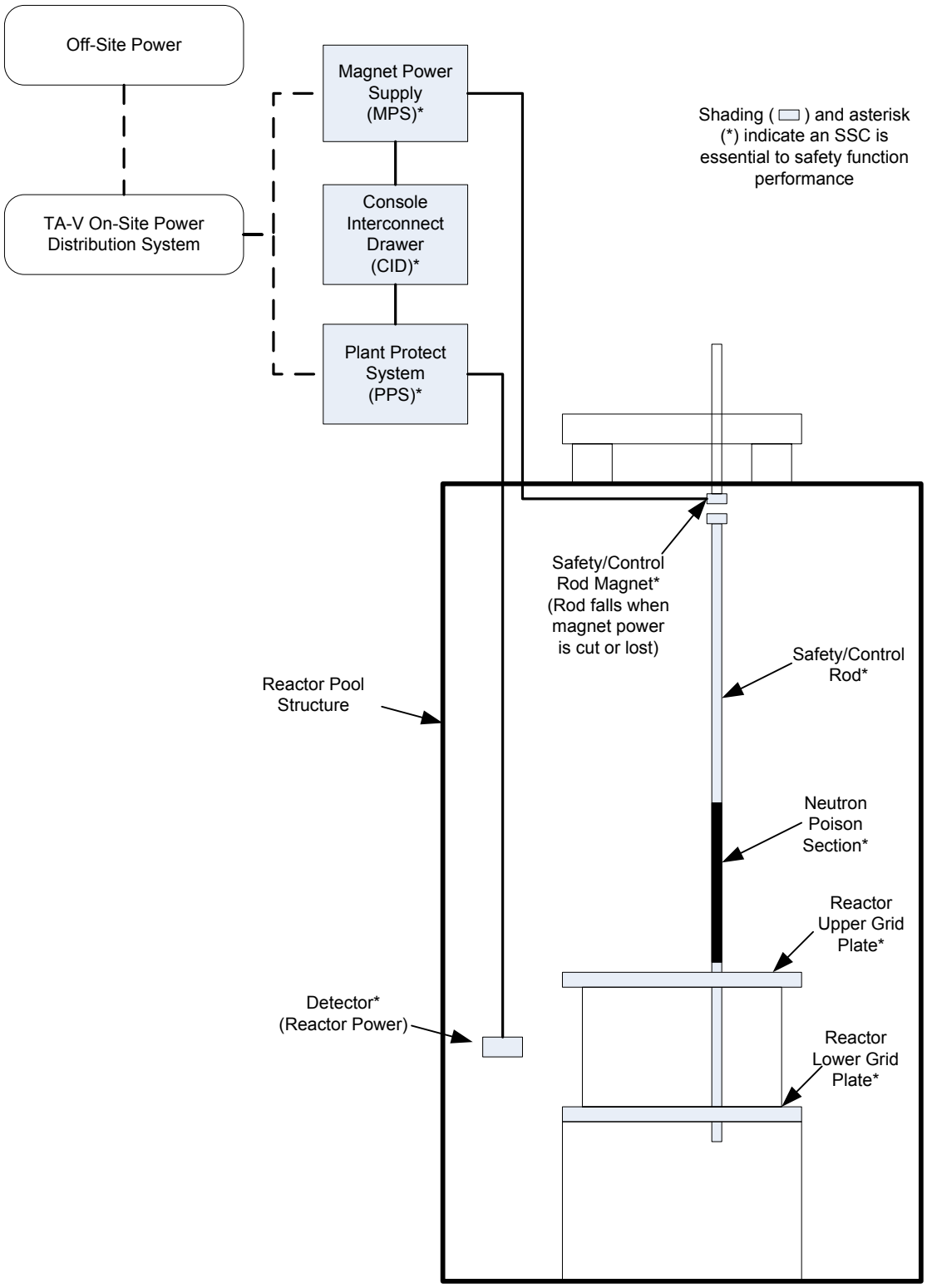

Figure 1. Sketch of the structures, systems, and components required to accomplish a Reactor Protection System safety function.

Table 4. Structures, Systems, and Components Needed to Accomplish the Active Confinement System Safety Function.

Structure/System/Component	Role in Reactor Protection System Safety Function
Reactor Room (Highbay) Building Structure	The role of the Reactor Room (or Highbay) is fundamental to the safety function. The Reactor Room provides passive confinement by its enclosure of the area into which a release of radioactive material from the reactor pool would flow. The ventilation fan would create an active confinement (see below).
Ventilation Fan	The ventilation fan maintains the interior of the Reactor Room at a negative pressure with respect to the outside environment. This ensures that any release of radioactive material from the reactor pool would be processed through a filter bank prior to its release to the environment. The ventilation system ductwork would be included with the fan as components necessary to ensure active confinement.
Filter Bank	The filter bank reduces the amount of radioactive material which is ultimately released to the environment. HEPA filters would remove a large fraction of any particulates. Charcoal filters would remove a large fraction of any halogens or halogen compounds.
Electrical Power	Electrical power is required to continuously operate the ventilation fan prior to and following a release of radioactive material.
Instrumentation	Various instrumentation is required to ensure that the safety function is operable prior to a release, and that it is operating properly after a release. Minimum instrumentation needs would be a flow meter for the ventilation system, a differential pressure indicator to ensure that the filters are not clogged or bypassed, and a differential pressure indicator to ensure that the Reactor Room remains at a negative pressure with respect to the environment. This also presumes some measure of post-accident monitoring by operation personnel.

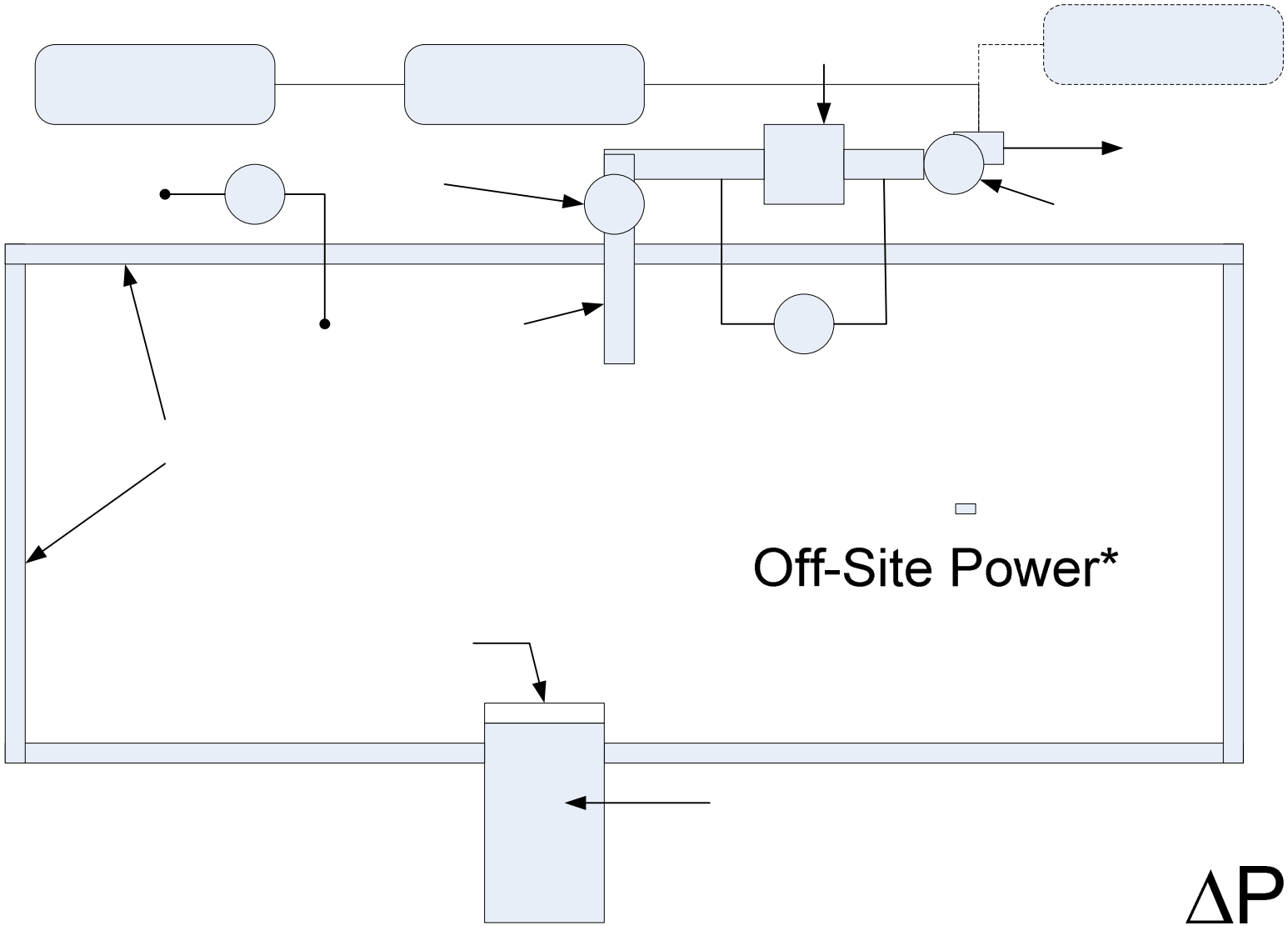

Figure 2. Sketch of the structures, systems, and components required to accomplish an Active Confinement System safety function.

Safety Class Design Criteria and Configuration Management

DOE Order 5480.30 (Nuclear Reactor Safety Design Criteria) establishes nuclear safety design criteria applicable to the design, fabrication, construction, testing, and performance requirements of nuclear reactor facilities and Safety Class structures, systems, and components (SSCs) within these facilities. The order applies to both new and existing reactor facilities. A majority of the general design requirements in Section 8.c.(1)-(16) of the order apply specifically to Safety Class SSCs. Table 5 lists these general design requirements, and notes their individual applicability to Safety Class SSCs.

Impacts of Transitioning ACRR SSCs to Safety Class Status

In general, the structures, systems, and components needed to accomplish a Reactor Protection System (RPS) safety function and an Active Confinement System (ACS) safety function are in place at the ACRR. However, simply declaring these SSCs to be "Safety Class" is not a proper course of action. As noted above, Safety Class SSCs (new and existing) must meet DOE Order 5480.30 Design Requirements. Thus, the proper course of action would be to transition the necessary ACRR SSCs to Safety Class status.

Table 6 provides an assessment of these impact of imposing the 5480.30 requirements on ACRR SSCs. Some of the Table 6 details are summarized below.

<u>Reactor Protection System</u>

It is expected that ACRR SSCs necessary to accomplish an RPS function could be successfully transitioned to Safety Class status. The transition effort would consist of a design basis reconstitution for the SSCs required to accomplish the RPS function, and (potentially) modifications or upgrades of non-PPS equipment (e.g, reactor power detectors, console mounting racks, core grid and support structures, control/safety elements, etc.).

Design basis reconstitution is discussed in DOE Standard 1073-2003, Appendix D. The standard prescribes a combination of several methods to successfully regenerate, recover, and document the design requirements, bases, and engineering information for SSCs at existing facilities. These methods include: (a) reanalysis, (b) gathering and documenting information from experienced operations and engineering personnel, (c) repeating the design process to effectively determine required design inputs and outputs, and (d) testing equipment to determine its functionality and evaluating the results with respect to design requirements.

This design basis reconstitution must be accomplished before declaring the SSCs which would accomplish the RPS function to be Safety Class. Premature declaration would result in significant vulnerabilities to audit findings from review/oversight agencies. In many cases, significant effort (analyses, evaluations, regeneration of quality records, and even modifications) would be required. However, the recent Plant Protect System upgrade project has provided a good "head start" for the monitor-and-trip electronics, as well as the Magnet Power Supply for the control/safety elements.

Minor modifications could include the need to procure new reactor power detector equipment to fully establish quality standards compliance, and seismic reinforcement and/or stabilization of the console racks which contain the Plant Protect System and Magnet Power Supply drawers. Major modifications could include structural redesign of the reactor core grid plates and support structure, control/safety elements, and any modifications needed to the control room itself with respect to seismic qualifications. The need for such major modifications would first be determined by analyses and evaluations, and could be alleviated by graded approach considerations.

Cost and schedule can only be roughly estimated, but can be considered to include four conceptual phases: (1) design basis reconstitution, (2) analyses and evaluations, (3) modifications, and (4) authorization basis updates. The design basis reconstitution would establish a baseline and identify areas which must be addressed by analyses and evaluations. The analyses and evaluations (most likely requiring the employment of outside contractors: e.g., structural engineers, fire protection engineers, etc.) would complete the design basis reconstitution and identify necessary modifications. The modifications would obviously provide the necessary SSCs for accomplishing the RPS safety function at a Safety Class design requirement level. Lastly, the DSA (and possibly TSR) would need to be updated to incorporate information related to the analyses, evaluations, and modifications which were needed to implement a Safety Class RPS safety function.

It is estimated that 18 to 24 months would be required to accomplish these four phases. This assumes some time overlap of the phases, and that the modifications would not be major (e.g, building/room construction, core grid or control/element redesign and reconstruction, etc.). Such major modifications could lead to extended reactor outage time, and logistical and work control hurdles for fabrication involving radioactive and special nuclear material, as well as extensive readiness reviews. The need for such major modifications would not become clear until the analysis and evaluation phase (6-12 months into the process).

Cost estimates range from $200K to $700K to cover contracts for analyses and evaluations. Major modifications in the control room area could add another $250K to $500K to these costs. Major modifications in the Highbay area could add another $500K to $3M to these costs. An average of two to three full-time equivalents from Nuclear Facility Operations personnel would be needed to participate, oversee, and coordinate these activities, implying a cost of $1.2M to $1.8M (over a two-year timeframe). Thus, the total cost could range from $2M to $6M.

Lastly, one can separate the DOE Order 5480.30 requirements into two general categories: (1) Normal Operation/Equipment Reliability, and (2) Abnormal/Accident Type Conditions. The first category deals with SSC performance requirements under normal operating conditions, and when equipment fails or breaks down due to expected design life limitations. The second category deals with the ability of SSCs to continue to function properly under abnormal/accident conditions (e.g., earthquakes, fires, extreme environmental conditions due to accidents, etc.). Table 7 provides an assessment of the ACRR Plant Protect System (PPS) and supporting components from this perspective, indicating the major impact of seismic and fire protection concerns. Table 8 provides a summary of controls currently in place for the ACRR PPS.

Active Confinement System

On the other hand, because of significant issues associated with the seismic qualification of the Reactor Room/Highbay structure, the transition to a Safety Class Active Confinement System would not be possible without significant modifications. The impact of seismic events on facility SSCs has typically been only qualitatively addressed in the ACRR Documented Safety Analysis (DSA), because of the low fission product inventory available to contribute to off-site radiological dose. The DSA currently states that the Reactor Room/Highbay would not be expected to withstand an earthquake associated with the current Performance Category 2 requirements. Transition of the ACS to Safety Class status would elevate the Reactor Room/Highbay to Performance Category 3 (PC-3).[4] Thus, transition to Safety Class status would likely require major modifications to the Reactor Room/Highbay structure.

[4] See DOE Standards 1020 for a full discussion of Performance Categories and their associated requirements.

In addition to the building structure, it would also be necessary for the ventilation system fan, filter bank, and ductwork to survive a PC-3 earthquake. The ventilation system was not designed and constructed to this level of performance assurance. Reanalysis, evaluation, and modification of the ventilation system would likely be as costly as redesign and reconstruction of the system to PC-3 standards.

For the ACS function, a seismic event can be both an initiator of a release (e.g., from the fuel or from materials stored at the facility) and the initiator of a failure of the building structure or ventilation system. Such a seismic event could result in the unmitigated release of material from the ACRR facility. Thus, the integrity of the building structure and the ability of the ventilation system to function during and following a seismic event are crucial to the ACS function.

A realistic estimate of the cost and schedule for such major structural modifications is beyond the scope of this white paper. It is sufficient to consider that the effort would be cost-prohibitive, and that significant facility shutdown time would be required to accomplish the modifications. If some consideration were to drive the need for a Safety Class ACS function, then it would be more cost effective to limit facility material-at-risk[5] and reactor power history to an extent consistent with successful completion of the facility's mission. The existing Reactor Room/Highbay and Highbay Ventilation System are better treated as defense-in-depth mitigative measures, with emphasis upon release prevention via the Plant Protect System and facility Technical Safety Requirements.

[5] Limitations on material-at-risk for experiments and facility inventories should take into account the intermittent nature of experiment campaigns involving significant amounts of fissile material. A small number of potential experiments in a given timeframe and limited timeframes for temporarily storing such experiments (i.e., the limited time during which such material is "at risk") would reduce the overall risk associated with a release from such experiments.

Table 5. Applicability of DOE Order 5480.30 Design Requirements for Safety Class SSCs.

DOE Order 5480.30 Design Requirement	Requirement and Applicability
Single Failure	Applicable: Safety Class SSCs must be able to perform their safety function assuming a single failure.
Quality Standards	Applicable: Quality standards are imposed to ensure operability and reliability for Safety Class SSCs.
Design Basis for Protection Against Natural Phenomena	Applicable: Safety Class SSCs must be able to perform their safety function(s) under certain natural phenomena design basis conditions.
Fire Protection	Applicable: Safety Class SSCs must be designed and located to minimize the probability and effect of fires and explosions.
Environmental Effects	Applicable: Safety Class SSCs must be designed to operate properly within its expected environmental conditions (e.g., temperature, pressure, humidity, radiation field, etc.) during normal and accident conditions.
Sharing of SSCs	Applicable: Safety Class SSCs must not be shared by nuclear facilities. Exceptions can be made when certain criteria are met.
Siting	Not Applicable: Deals with overall plant siting vs. design of specific Safety Class SSCs. Siting is a foregone conclusion for an existing facility.
Containment and Confinement Barriers	Not Applicable: The policy of requiring containment or confinement applies to a facility as a whole, not to individual SSCs at a facility.
Human Factors Engineering	Applicable: Human Factors Engineering shall be considered in the design of nuclear reactor systems that have a human interface for operating and maintenance.
Dynamic Effects Design Basis	Applicable: Safety Class SSCs must be designed such that they are protected against dynamic effects (e.g., pipe whip, high-energy fluid discharge) which may result from equipment failures and events and conditions outside the facility.
Safeguards and Security	Applicable: To the extent practical, Safety Class SSCs must be designed to impede radiological material sabotage and facilitate damage control and consequence mitigation.
Effluent and Emissions Control	Not Applicable: Deals with overall facility design vs. design of specific Safety Class SSCs.
Reactor Decontamination and Decommissioning	Not Applicable: Deals with overall facility design vs. design of specific Safety Class SSCs.
Waste Management	Not Applicable: Deals with overall facility design vs. design of specific Safety Class SSCs.
Support Systems	Applicable: Any support systems needed for a Safety Class to perform its safety function must also be considered as Safety Class.
Non-Safety Class SSCs	Applicable: Failure of SSCs which are not Safety Class must not prevent Safety Class SSCs from performing their safety function.

Table 6. Impacts of DOE Order 5480.30 Design Requirements for a Transition of ACRR SSCs to a Safety Class Status.

DOE Order 5480.30 Design Requirement	Impacts of Declaring a Safety Class Reactor Protection System Safety Function	Impacts of Declaring a Safety Class Active Confinement System Safety Function
Single Failure	MINIMAL IMPACT • The Plant Protect System (PPS) and Magnet Power Supply (MPS) have been designed and constructed in accordance with applicable criteria in ANSI/ANS-15.15-1978, DOE Order 5480.30, IEEE Std. 603-1998, and IEEE 379-2000, as documented in Appendix 7A of Ch. 7 in the ACRR DSA.	SIGNIFICANT IMPACT • Significant design and modification work would be required to ensure that the overall system is single failure proof. • The Highbay Ventilation System (HBVS) was not built to single failure criteria. It is a single train system utilizing one fan vs. two redundant fans. An independent fan train (with independent filters and supporting ductwork) would have to be designed and installed. • In addition, all other system components (e.g., dampers, damper position actuators, control and monitoring instrumentation, etc.) would have to be evaluated in a single failure analysis. Modifications and new equipment would ultimately be required. • The HBVS does not have an emergency power source (e.g., diesel generator) to maintain an active confinement function in the event that electrical power is lost.
Quality Standards	MODERATE IMPACT • The PPS and MPS have been designed, constructed, and managed in accordance with 10 CFR 830 Subpart A QA criteria, as implemented via the TA-V QA Program (in particular through the TA-V Work Control process). • Other SSCs participating in accomplishing the safety function are much older than the PPS (e.g., control/safety rods, reactor core grid plates, neutron flux detectors). As such, adequate and auditable supporting documentation for QA would require effort to reconstruct.	SIGNIFICANT IMPACT • As an ACRR system, maintenance, testing, and modification of the HBVS is controlled in accordance with 10 CFR 830 Subpart A QA criteria, as implemented via the TA-V QA Program (in particular through the ACRR Work Control process). • The HBVS and its supporting components have been in operation for decades at the ACRR. As such, adequate and auditable supporting documentation for QA would require significant effort to reconstruct. • Development of supporting design/evaluation analyses would require significant effort to reconstruct.

Table 6. Impacts of DOE Order 5480.30 Design Requirements for a Transition of ACRR SSCs to a Safety Class Status.

DOE Order 5480.30 Design Requirement	Impacts of Declaring a Safety Class Reactor Protection System Safety Function	Impacts of Declaring a Safety Class Active Confinement System Safety Function
Natural Phenomena	SIGNIFICANT IMPACT • As Safety Class equipment, SSCs would be expected to meet Performance Category 3 criteria for protection against impacts of natural phenomena. • Performance Category 3 equipment requires a site-specific analysis of natural phenomena impacts (e.g., earthquake magnitude, maximum wind speeds, maximum precipitation, etc.) and probabilities beyond simple reference to building code assessments. • Analyses and evaluations (in accordance with DOE Standard 1020-2002) would be required to demonstrate that the PPS and its supporting equipment, as well as the control/safety rods and the core grid and support structure, would be able to accomplish their safety function during a design basis earthquake (DBE). • Modifications to the control console cabinets which house the PPS drawers would most likely be required to ensure their stability during a DBE. Modifications to the control/safety elements and the core grid and supports structures may also be required. • Not only must the PPS and its supporting equipment be analyzed (and potentially modified), but the nearby control room console equipment and the control room building structure itself must be addressed. The failure of any of these structures during a DBE, must not interfere with the PPS in performing its safety function. Likewise, the failure of Highbay equipment and the Highbay building structure itself must not interfere with the control/safety elements.	SIGNIFICANT IMPACT • As Safety Class equipment, SSCs would be expected to meet Performance Category 3 criteria for protection against impacts of natural phenomena. • Performance Category 3 equipment requires a site-specific analysis of natural phenomena impacts (e.g., earthquake magnitude, maximum wind speeds, maximum precipitation, etc.) and probabilities beyond simple reference to building code assessments. • Analyses and evaluations (in accordance with DOE Standard 1020-2002) would be required to demonstrate that the HBVS and its supporting equipment would be able to accomplish their safety function during a design basis earthquake (DBE). • The ACRR DSA states that the Reactor Room/Highbay is not expected to withstand either a design basis earthquake or design basis wind speeds. • Modifications necessary to enable the Reactor Room/Highbay to withstand design basis natural phenomena conditions could lead to redesign and reconstruction of the entire structure. • Not only must the Reactor Room/Highbay be analyzed (and potentially undergo major modifications), but the ventilation fans, filters, and ductwork must also be addressed. Significant redesign and modifications (e.g., new equipment, seismic supports, etc.) would be required to ensure that these components can perform their functions during a DBE.

Table 6. Impacts of DOE Order 5480.30 Design Requirements for a Transition of ACRR SSCs to a Safety Class Status.

DOE Order 5480.30 Design Requirement	Impacts of Declaring a Safety Class Reactor Protection System Safety Function	Impacts of Declaring a Safety Class Active Confinement System Safety Function
Fire Protection	MODERATE IMPACT • The PPS and MPS are housed in metal enclosures and separate cabinets. Both PPS drawers are, however, located side-by-side, and the MPS is nearby in the same control room console. Cabling for each PPS drawer is run in separate conduits between the drawer and the reactor. • As Safety Class equipment, physical separation of the PPS drawers would likely be required such that a fire would not result in a common cause failure of the PPS as a whole. This could require the design and construction of fire barriers between the PPS drawers, and perhaps require relocation of the drawers and cable conduits to provide greater physical separation. • This is somewhat mitigated by the expectation that the ultimate impact of a fire on the PPS would be that magnet power to the control/safety rods would be interrupted (thus placing the reactor in a safe shutdown state).	SIGNIFICANT IMPACT • The ACRR DSA (Ch. 6) states that the HBVS was not designed to ASME N509, *"High Efficiency Air Treatment Systems For Nuclear Power Plants,"* which includes requirements for fire protection. No other consensus standard which would address fire protection criteria is referenced in the DSA for the HBVS. • ASME N509 is referenced in DOE Guide 420.1-1 as relevant to Safety Class ventilation systems, and considerable redesign and modification of the HBVS would be needed to ensure the prevention and detection of fires affecting the HBVS. • The fire detection and fire fighting capabilities in Bldg. 6588 would require evaluation (and possible modification) to ensure the capability to minimize the impact of a fire on the HBVS and its supporting equipment.
Environmental Effects	MINIMAL IMPACT • Environmental effects (e.g., elevated room temperatures, humidity, radiation levels) from ACRR operation and/or accident scenarios are not expected to be significant. • Documentation to demonstrate the expectation of insignificant environmental effects would be required.	MINIMAL IMPACT • Environmental effects (e.g., elevated room temperatures, humidity, radiation levels) from ACRR operation and/or accident scenarios are not expected to be significant. • Documentation to demonstrate the expectation of insignificant environmental effects would be required.

Table 6. Impacts of DOE Order 5480.30 Design Requirements for a Transition of ACRR SSCs to a Safety Class Status.

DOE Order 5480.30 Design Requirement	Impacts of Declaring a Safety Class Reactor Protection System Safety Function	Impacts of Declaring a Safety Class Active Confinement System Safety Function
Sharing of SSCs	NO IMPACT • Other than electrical power, the RPS safety function does not share any SSCs with other nuclear facilities within TA-V. • Electrical power is not essential to the function of the RPS (i.e., loss of electrical power would place the reactor in a safe configuration).	SIGNIFICANT IMPACT • The ACS would share electrical power with other nuclear facilities within TA-V. • Electrical power would be essential to the function of the RPS. • A seismically-qualified emergency power supply (e.g., diesel generator) would be required to mitigate a loss of electrical power event.
Human Factors Engineering	MODERATE IMPACT • Human Factors was a consideration in the design and construction of the new Plant Protect System, as evidenced by the design layout of the drawer and its operator interface panel (which allow for easy testing and calibration). • No formal human factors engineering study has been performed on the PPS, MPS, or other SSCs participating in accomplishing the safety function (e.g., control/safety rods, reactor core grid plates, neutron flux detectors). • Documentation of human factors acceptability would be desirable.	MODERATE IMPACT • No formal human factors engineering study has been performed on the HBVS, or other SSCs which would participate in accomplishing this safety function (e.g., instrumentation, operating panels, etc.). • Documentation of human factors acceptability would be desirable.
Dynamic Effects Design Basis	MINIMAL IMPACT • There are no pipes carrying high energy fluids at the ACRR which could result in pipe whip impacts on the PPS or its supporting equipment in the event of a pipe rupture. • Documentation of this evaluation would be desirable.	MINIMAL IMPACT • There are no pipes carrying high energy fluids at the ACRR which could result in pipe whip impacts on the HBVS or its supporting equipment in the event of a pipe rupture. • Documentation of this evaluation would be desirable.

Table 6. Impacts of DOE Order 5480.30 Design Requirements for a Transition of ACRR SSCs to a Safety Class Status.

DOE Order 5480.30 Design Requirement	Impacts of Declaring a Safety Class Reactor Protection System Safety Function	Impacts of Declaring a Safety Class Active Confinement System Safety Function
Safeguards and Security	MINIMAL IMPACT • All SSCs are located within the TA-V security fence. • PPS and supporting equipment maintenance and calibration is performed by ACRR operations staff members vs. outside contract personnel.	MODERATE IMPACT • All SSCs are located within the TA-V security fence. • HBVS and supporting equipment maintenance and calibration are performed by outside contract personnel. • An evaluation of this criteria will be required. Additional ACRR operations staff members oversight of maintenance and calibration work performed by outside contractors may be required.
Support Systems	MODERATE IMPACT • As noted in the Quality Standards entry above, other SSCs participating in accomplishing the safety function are much older than the PPS (e.g., control/safety rods, reactor core grid plates, neutron flux detectors). As such, adequate and auditable supporting documentation for QA may require effort to reconstruct. Modifications, new designs, and new equipment may be required.	SIGNIFICANT IMPACT • As noted under the single failure criteria entry, SSCs supporting the operation of the HBVS (e.g., dampers, damper position actuators, control and monitoring instrumentation, electrical power, etc.) would not be capable of a seamless transition to Safety Class status. Modifications and new equipment would be required.
Non-Safety Class SSCs	SIGNIFICANT IMPACT • Seismic qualification issues will have to be addressed for the impact that failure of other control room console equipment and the control room building structure itself would have on the PPS, MPS, instrumentation wiring, etc. • Seismic qualification issues will have to be addressed for the impact that failure of Highbay equipment and the Highbay building structure itself would have on the control/safety rods.	SIGNIFICANT IMPACT • Seismic qualification issues will have to be addressed not only for Highbay, but for any structure in or upon which the HBVS equipment is located. • In addition, even if the HBVS exhaust stack were not credited as part of the Safety Class group of SSCs, its seismic qualification would have to be addressed since it could damage the HBVS if it were to fall during a seismic event.

Table 7. Status of ACRR Plant Protect System Related SSCs with Respect to DOE Order 5480.30 Safety Class Design Requirements.

DOE Order 5480.30 Design Requirement	Status		Comments
	SAT*	UNSAT**	
Normal Operation/Equipment Reliability			
Single Failure	X		System was designed for redundancy, diversity, and channel independence.
Quality Standards	X		Design control, configuration control, maintenance control, operational control, QA records, etc., are adequate.
Environmental Effects	X		System design is considered adequate for normal environment.
Sharing of SSCs	X		SSCs are not shared with other nuclear facilities. Electric power is not critical to safety function performance.
Human Factors Engineering	X		System design is considered adequate from Human Factors standpoint.
Safeguards and Security	X		Equipment within TA-V security fence. Maintenance/Calibration controlled and performed by ACRR staff.
Support Systems	X		Design and performance of support systems are considered adequate.
Abnormal/Accident Type Conditions			
Natural Phenomena		X	Key components (console racks, core grid and support structure, control/safety elements) are not seismically qualified.
Fire Protection		X	Degree of physical separation and fire barrier provision not to Safety Class level.
Environmental Effects	X		Extreme environmental conditions not credible at ACRR.
Dynamic Effects Design Basis	X		No high-energy fluid systems at ACRR.
Safeguards and Security	X		Equipment within TA-V security fence. Maintenance/Calibration controlled and performed by ACRR staff.
Non-Safety Class SSCs		X	Other control room consoles and equipment, and control room building structure are not seismically qualified.

* SAT = Requirement is essentially met. Effort would be required to reconstitute the design basis information in some cases. Documented evaluation of satisfactory fulfillment of requirements would be necessary in some cases.

** UNSAT = Requirement is not met. Analyses and evaluations would be needed to determine extent of modifications required.

Table 8.
CONTROLS CURRENTLY IN PLACE FOR THE ACRR PLANT PROTECT SYSTEM

TECHNICAL SAFETY REQUIREMENTS (TSR)

- Limiting Control Settings
  - TSR prescribes maximum allowable scram setpoints
- Limiting Conditions for Operation
  - TSR prescribes minimum required channel operability conditions
- Surveillance Requirements
  - TSR prescribes daily and/or startup channel checks
  - TSR prescribes annual calibrations

CONFIGURATION CONTROL

- Modification Development
  - Modifications documented through formal Facility Modification Request process
- Modification Review
  - Sandia Independent Review and Appraisal System (SIRAS) reviews PPS modifications
  - Unreviewed Safety Question process used to assess need for DOE review and approval
- Modification Implementation
  - Modifications implemented through formal Facility Work Request process

WORK CONTROL

- Maintenance/Calibration
  - Performed using written procedure with checklist
  - Performed by two certified Reactor Operators/Supervisors
  - Calibration records maintained
  - Maintenance (preventive and corrective) activities recorded in Material History Log
- Operation (Daily/Startup Operational Checkouts)
  - Performed using written procedure with checklist
  - Performed by certified Reactor Operator
  - Supervised/Reviewed by certified Reactor Supervisor
  - Operation records maintained