Session 12

CRITICAL REVIEW

WEDNESDAY: October 22, 1980

CRITICAL REVIEW OF NOBLE GAS TREATMENT SYSTEMS

D.T. Pence

OPENING REMARKS OF SESSION CHAIRMAN:

The topic of our third Critical Review is Noble Gas Treatment, and the speaker will be Dr. Dallas Pence. Dr. Pence has a doctorate in physical chemistry from Stanford University. He spent 12 years at the Idaho Chemical Processing Plant before spending about two years at General Atomic. He has been in his present assignment at SAI for the past five years as manager of Effluents Control Development. It is a great pleasure for me to introduce Dallas and to anticipate his topic. He is a member of our program committee and been of enormous help in the conduct of the meeting here in San Diego. He is our "local man on the site."

CRITICAL REVIEW OF NOBLE GAS TREATMENT SYSTEMS

by D.T. Pence
Science Applications, Inc.
4030 Sorrento Valley Boulevard
San Diego, California 92121

Abstract

Noble gas treatment systems for various applications in the nuclear industry are reviewed and discussed. The applications considered include nuclear fuel reprocessing, reactor waste gas treatment systems, and reactor emergency noble gas recovery systems. The status of technology and development work in progress is discussed.

1. Introduction

Radioactive noble gases are emitted from a number of sources in the nuclear fuel cycle, so to limit the scope of this review only control systems for the removal of krypton and xenon will be considered and only from the effluents of light water reactors (LWRs) and facilities in which the LWR fuel is reprocessed. Also, the following discussion is limited to describing some of the technologies that have been proposed for use in controlling krypton and xenon from many of these sources and to comment on the status of their development and probable effectiveness.

2. Nuclear Fuel Reprocessing

The processes considered for application to noble gas control at LWR reprocessing facilities include: (1) cryogenic distillation, (2) fluorocarbon absorption or selective absorption, and (3) selective adsorption. All of these processes require rather comprehensive pretreatment of the off-gas stream prior to the actual treatment for noble gas separation and recovery. Although the purpose of this review is to discuss the various noble gas processes, the operability and performance of the processes depend on the effectivness of the pretreatment steps. Therefore some attention will be given to the status of noble gas control systems pretreatment technology. Many techniques have been developed for the pretreatment portion of the overall process, and there are many options. The exact pretreatment scheme selected depends on the perceived waste

management requirements, waste management options, and the noble gas separations system selected.

2.1 Pretreatment Requirements

All of the noble gases in spent nuclear fuel are released during dissolution. The major contaminants that must be removed from the dissolver off gas prior to the noble gas separation and recovery step include: particulates, semivolatile fission products, NO_X, water, iodine, and carbon dioxide. The main radioisotopes of concern from a waste management point of view include those of ruthenium, iodine, tritium, carbon-14, and krypton-85. All of the radioisotopes of xenon and krypton except krypton-85 have decayed to innocuous levels by the time the nuclear fuel is reprocessed.

A typical pretreatment scheme is shown in Figure 1. The order of the pretreatment steps may vary, but this figure depicts the basic elements required in most of the pretreatment schemes.

2.1.1 NO_X Removal

Most pretreatment schemes utilize an NO_X absorption column for bulk NO_X removal. Unless pressurized systems are used, the efficiency of the NO_X absorption columns are generally limited to 80 to 90% removal. The NO_X in the effluent from the absorption columns is mostly in the form of NO which only slowly oxidizes to NO_2 at low concentrations. There are two techniques being studied for the removal of the remaining NO_X: destruction with ammonia as the reducing gas on a synthetic mordenite catalyst[1,2] and destruction with hydrogen as the reducing gas on a metal-impregnated, usually a noble metal, catalyst.

In pretreatment systems for cyrogenic distillation systems, oxygen must also be removed to low levels, parts-per-million range, because of the formation of ozone through radiolysis of the oxygen in liquid oxygen-nitrogen mixtures[3] unless other techniques are used to control ozone formation. The NO_X destruction on synthetic mordenite catalysts using ammonia as the reducing gas is selective for NO_X and does not cause the conversion of oxygen to water. On the other hand, the use of the technique using hydrogen as the reducing gas is not selective and will reduce both the NO_X and oxygen if sufficient hydrogen is added to the reaction. Therefore, this technique is usually used when cryogenic distillation is selected for noble gas removal.

There are some inherent problems in the control and operation of both types NO_X reduction systems that can adversely affect the performance of the noble gas removal systems. It could very well be that the limited performance of the noble gas separation step will depend on how well the NO_X destructor/oxygen recombiners perform.

In the pretreatment for cryogenic distillation processes, it is desirable to maintain an excess amount of hydrogen to ensure complete conversion of oxygen to water. However, excess hydrogen promotes the formation of methane which should be avoided, because it could conceivably represent a safety hazard in the presence of oxygen and/or ozone; and it would inhibit the efficiency of a downstream carbon-14 removal system. Also, noble metal recombiner catalysts tend to generate ammonia as a reaction product in the reduction of NO_X with hydrogen. For this reason, workers at the Karlsruhe Nuclear Research Center have been

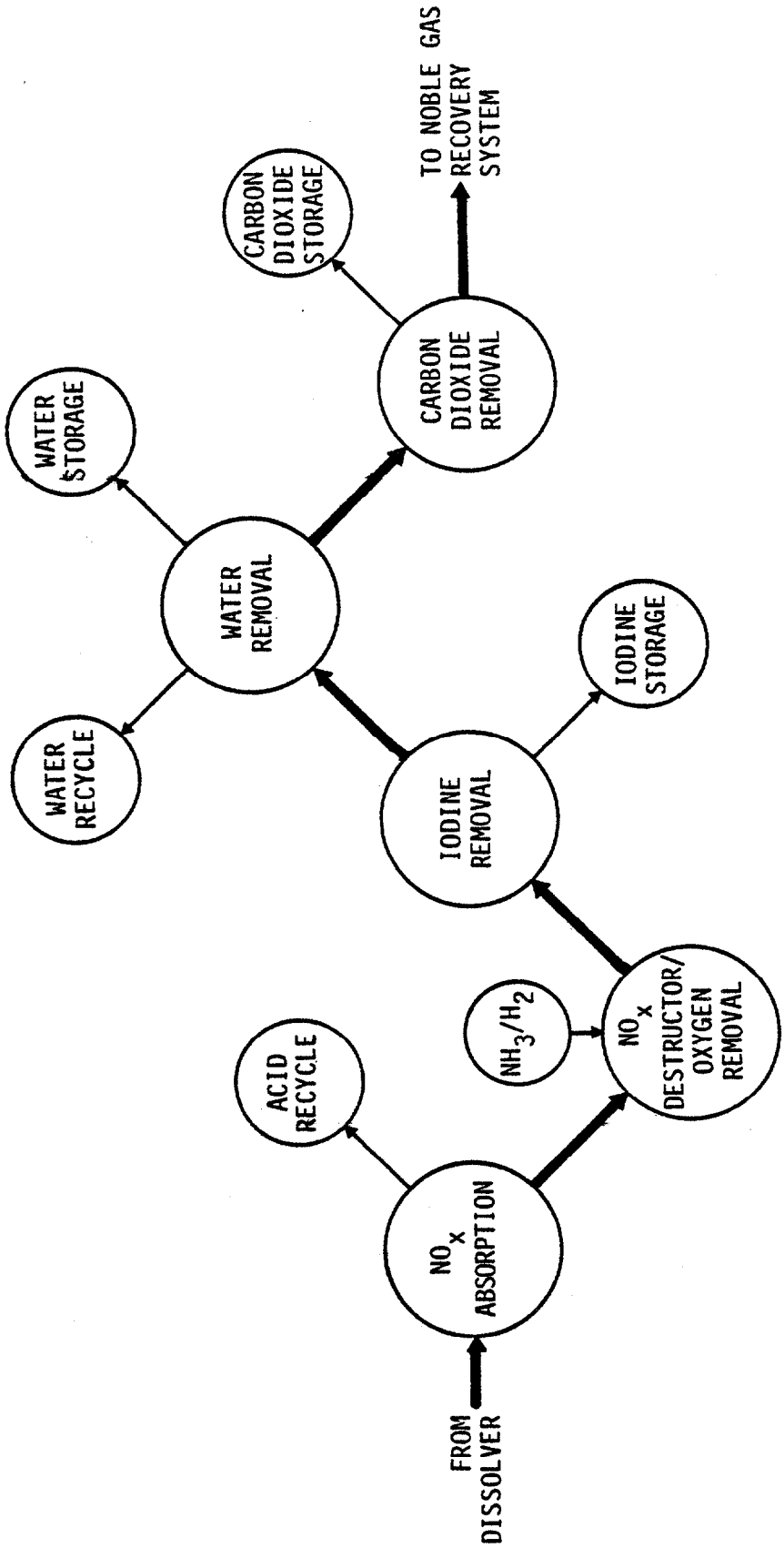

SAI-80DP-33

Figure 1. Noble Gas Recovery Pretreatment Scheme

investigating the uses of other NO_X reduction catalysts that can be used either in conjunction with, or in place of, the noble metal catalysts for use with a combination NO_X destructor-oxygen recombiner.[4,5] They have determined that platinum-based catalysts will reduce both oxygen and NO_X to levels below 1 ppm but promotes the formation of ammonia in the NO_X reduction. By using a following catalyst bed of ruthenium-based catalyst, ammonia levels were reduced to 25 ppm or less. To attain this performance, it was necessary to keep the hydrogen level to less than 1000 ppm over the required stoichiometry for NO_X and oxygen reduction.

Because the reduction of both oxygen and NO_X is so exothermic and because the catalyst materials are adversely affected by excessive temperature, a large recycle gas flow, on the order of 10 times the gas volume to be treated, is required in this technique. With the wide variations in the dissolver off-gas composition during the various phases of the dissolver cycle, maintaining the desired hydrogen stoichiometry will be a formidable task.

In both the selective absorption technique using a fluorocarbon solvent and the selective adsorption technique using inorganic adsorbents, oxygen does not interfere with the separation process, nor does the formation of ozone in significant concentration appear likely. Thus, the selective reduction process for NO_X using ammonia as the reducing gas can be used in the pretreatment for these processes. There are some potential operation problems associated with this technique as well. Bruggeman and coworkers[6] at SCK in Mole evaluated this process specifically as a pretreatment step for a noble gas removal process using cryogenic distillation. They observed that NO_X concentrations as high as 5000 ppm could be reduced to a few ppm when the ratio NH_3/NO of 1.5 was maintained. The oxidation of ammonia on the same catalyst was also studied. Their conclusions were similar to those observed previously in that ammonia will selectively reduce NO_X in the presence of oxygen and that the excess ammonia will also be oxidized by the catalyst.[1,2] However, they also determined a model to predict how much catalyst is needed for a given temperature to effect the oxidation of ammonia to a given level. Although they did not observe any deterioration in the performance of the catalyst in their laboratory studies, some reduction was observed during pilot-plant studies.[7] This was initially attributed to excessive catalyst bed temperatures.

When high concentrations of NO_X are reduced with this technique, excessive temperatures will also result from the exothermic reaction, depending on the flow rate and the amount of water present. If this process is used downstream of an NO_X absorption column that can limit the NO_X concentration to the NO_X destructor to about 2%, the process can be operated without the need for recycle.

Ammonia is more difficult to quantitatively measure than hydrogen with a quick response time with existing instrumentation. However, the control of ammonia is not as critical as that for hydrogen in the combined NO_X/O_2 destructor.

Reduction of fission product ruthenium will likely be reduced on the synthetic mordenite catalyst as evidenced in laboratory tests.[8] The reduction of ruthenium on the catalyst did not appear to adversely effect the NO_X reduction performance of the catalyst, but the tests were not of sufficient duration to be conclusive. Plating out of the fission product ruthenium on the platinum-based catalyst may also occur and could effect its performance.

2.3.2 Iodine Removal

There are a number of techniques available for iodine-removal for the noble gas separation process pretreatment including scrubbing with nitric acid solutions, mercuric nitrate-nitric acid or hyperaziotropic nitric acid and the use of solid adsorbents, such as silver-impregnated amorphous silicic acid (AC 6120) on silver-exchanged zeolites. All of these techniques appear capable of removing airborne iodine adequately to protect the noble gas removal processes. However, the order in which the iodine removal system is applied is important, depending on the noble gas removal system selected. Iodine even in moderately low concentrations will poison platinum-based destructor catalysts, so the iodine should be removed before the NO_X/O_2 destructor when this process is used. Iodine does not appear to adversely effect the synthetic mordenite destructor catalyst.[6]

When using the mordenite-catalyzed NO_X destructor, there is an advantage by placing the iodine removal system downstream of the NO_X destructor in that it would prevent possible contamination of the iodine removal device by semivolatile fission products, thereby simplifying maintenance operations and waste management procedures involving this process and the collected product. In other pretreatment schemes, some sort of ruthenium removal technique will probably be required to prevent downstream contamination by fission product ruthenium. It would appear that ruthenium would not reach the noble gas removal process step with any of the possible pretreatment schemes, but this is not certain. Contamination of the noble gas removal equipment with radioruthenium would certainly compound maintenance procedures. Because of the small quantities involved, it would appear unlikely the ruthenium would affect the performance of the noble gas removal.

2.1.3 Water Removal

Unless a tritium removal process, such as the Voloxidation process, is used, the water vapor will be contaminated with tritium. All of the noble gas removal processes require removal of water vapor to about 1 ppm or the water will freeze out and cause plugging. Bulk water vapor can easily be removed with condensers, and several solid inorganic desiccants are available that will remove water vapor to the levels needed without appreciable co-adsorption of the noble gases. Molecular sieve zeolites are usually used for this purpose.

2.1.4 Carbon Dioxide

As carbon dioxide affects the performance of the noble gas removal processes, it must also be removed prior to this step. In addition the concern for airborne contamination of carbon-14 has made the control of carbon-14 a waste management problem. Several techniques are available for carbon dioxide control that will adequately protect the noble gas removal systems. The carbon dioxide can be removed and concentrated on certain molecular sieves for transfer to a solidification step, or it can be removed directly using barium hydroxide hydrate.[9,10] In the latter case, the process needs to be placed before the water removal desiccant.

2.2 Noble Gas Removal Processes

2.2.1 Cryogenic Distillation

Noble gas removal using cryogenic distillation is the most developed of any other technique considered. This process has been in periodic use at the Idaho Chemical Reprocessing Plant since the mid-sixties.[11] Although this system was not designed for complete noble gas removal, its successful operation has demonstrated the feasibility of the process. There has been considerable development activity on this technique for application to the control of krypton-85 from LWR fuels reprocessing facilities by a number of research groups including: SCK/CEN at Mol, Belgium; CEN/FAR, Fontenay-aux-Roses, France; the Nuclear Research Center at both Juelich and Karlsruhe, West Germany; and by the Power Reactor and Nuclear Fuel Development Corporation of Japan (PNC). To date all of the work has been limited to pilot-plant-scale tests, and there has been no long-term tests with actual radioactive dissolver off gases. Construction of a 18-N m^3/h (30-ft^3/min) capacity cryogenic distillation system for controlling krypton-85 emissions from the Tokai Mura Reprocessing Plant in Japan was started several months ago and is scheduled to go into hot operation in mid 1982.[12] This will be the first full-scale demonstration of the cryogenic distillation process which was designed for greater than 90% removal efficiency.

Process Description. A typical flow diagram of a cryogenic distillation process is given in Figure 2. There are several versions of this process. The one given in Figure 2 is called a three-component system in which a gas mixture of krypton, xenon, and nitrogen is compressed to 500 to 800 kPa (75 to 120 psia) and cooled to about -140 to -150°C prior to injection at about mid-point in the primary column. Both sieve plates and various types of packing materials have been used in the primary column. Some of the nitrogen is cooled to the point of condensation at the top of the column by a liquid nitrogen-cooled heat exchanger causing it to cascade down through the column. Krypton and xenon are absorbed in the condensed nitrogen and are collected in the bottom of the column. The condensed liquid nitrogen at the bottom of the column is heated slightly so that some of the liquid nitrogen becomes vaporized; thereby causing a continual reflux action of the nitrogen.

The temperature profile in the column must be carefully controlled to prevent solid formation of the xenon which causes plugging. Operating the column at a higher pressure reduces the need for such rigid temperature control, but this adds considerably to the column cost and increases the danger of a large krypton-85 release if the column fails.

Krypton and xenon are separated in the rectification column that is operated at a reduced pressure of about 300 kPa (44 psia) and is usually done in batch operation.

To avoid the potential of xenon freeze out and to allow operation of the primary column at a slightly lower pressure, 400 kPa (60 psia), one cryogenic distillation scheme removes the xenon before it enters the primary column. This is done by freezing the xenon out on some type of chilled adsorbent.

The French have developed a cryogenic process using liquid argon as the solvent for krypton and xenon absorption. This system operates at higher pressures, on the order of 1400 kPa (200 psia), and has the same pretreatment requirements as the nitrogen solvent systems. This process is presently under evaluation at Fontenay-aux-Roses.

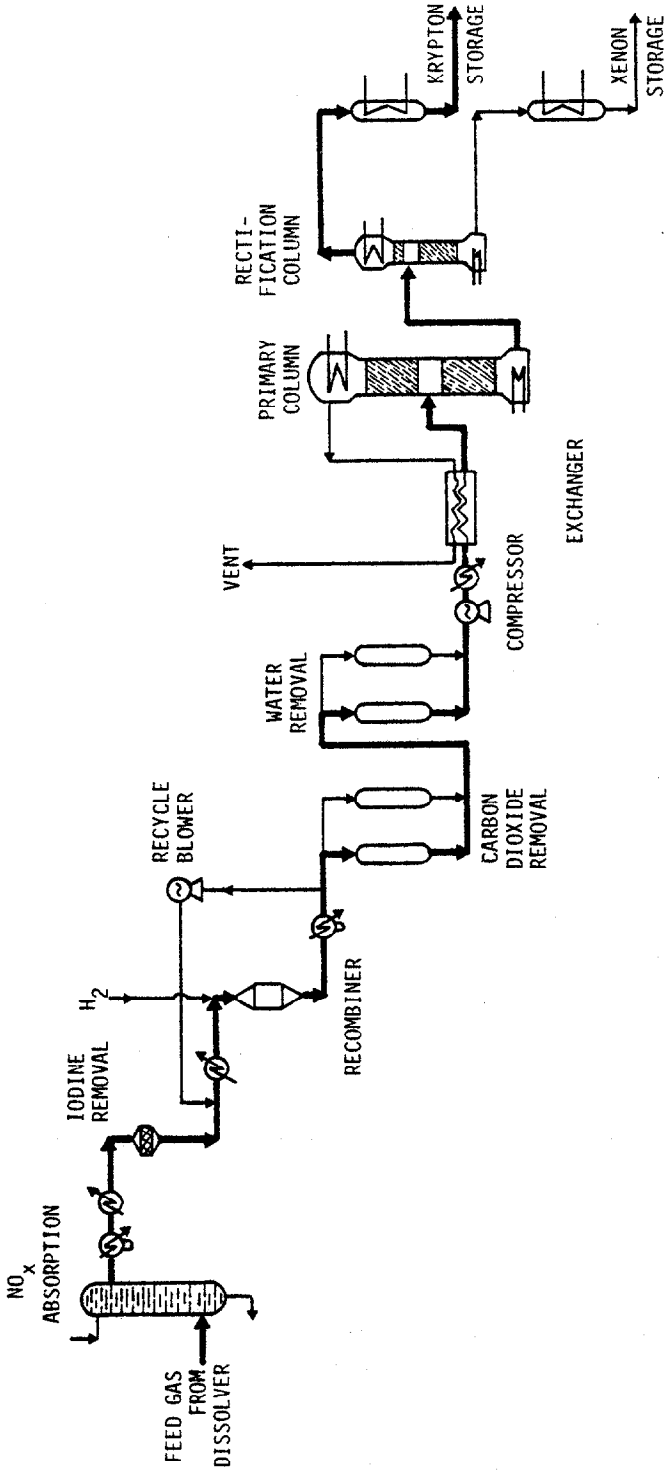

Figure 2. Noble Gas Recovery Using Cryogenic Distillation From LWR Fuels Reprocessing

Process Performance. In pilot-plant studies, krypton removal decontamination factors of 100 to 1000 or more have been obtained which is greater than most existing or anticipated regulatory requirements for krypton-85 control. It should be emphasized that none of the development projects have been operated for long periods of time in a hot radioactive environment, so their tolerance to potential contaminants has not yet been completely established. Thus, specifications for the pretreatment steps have not been accurately defined. The operation of PNC plant at Tokai Mura is eagerly awaited to provide guidance in this respect.

2.2.2 Selective Absorption

The selective absorption process using a fluorocarbon solvent has been under development at Oak Ridge National Laboratory (ORNL) since 1967. There are a number of papers describing various phases of this work which are summarized in a recent paper by Merriman, Stephenson, Kanak, and Little.[13] Most of the reported work centered around a three-column system including absorber, fractionator, and stripper columns. In the past several years, they have combined these operations into a single combination column. A flow diagram showing how this process could be applied to the removal of noble gases from LWR fuel reprocessing plants is shown in Figure 3.

Process Description. After pretreatment, the feed gas containing krypton, xenon, argon, and nitrogen is compressed to about 800 kPa (120 psia) and cooled to about -30^{0}C. The gas mixture is then injected about one-third of the way from the bottom of the combination column, which is filled with a special packing material. Decontaminated off-gas flows from the top of the column and regenerated solvent from the bottom, while krypton and xenon are collected as a side stream near the bottom of the column. A portion of the solvent is continually vaporized from the bottom of the column while another portion is removed from the bottom, cooled, and recycled to the top of the column. The condensed, solvent absorbs the rising krypton and xenon as the solvent flows downward toward the warmer, bottom portion of the column. As the solvent warms it releases the krypton and xenon. By proper adjustment of the reflux and recycle rates, a stationary boundary is established in the column where the krypton and xenon can be withdrawn in a relatively pure form along with some solvent. The solvent in the product gas is removed in regenerable beds containing molecular sieve.

A product purification scheme is presently under development[14] which will probably involve freezing out of the xenon on a solid adsorbent and cryotrapping and expansion of the krypton in to storage cylinders. A technique is also being developed for removing oxygen in the product gas, if this is considered necessary.

Process Performance. The selective absorption process has been demonstrated to have a very high tolerance to the various contaminant gases in the dissolver off gas, such as the oxides of nitrogen, CO_2, and I_2. However, its use is recommended with a pretreatment system, because the operation of a pretreatment system will probably be more economically attractive than continual solvent purification. Noble gas removal efficiencies from such carrier gases as air, N_2, Ar, He, and H_2 of greater than 99% have been demonstrated in a large number of pilot-plant demonstration tests. Decontaminantion factors for krypton of greater than 100 have been obtained in these tests.

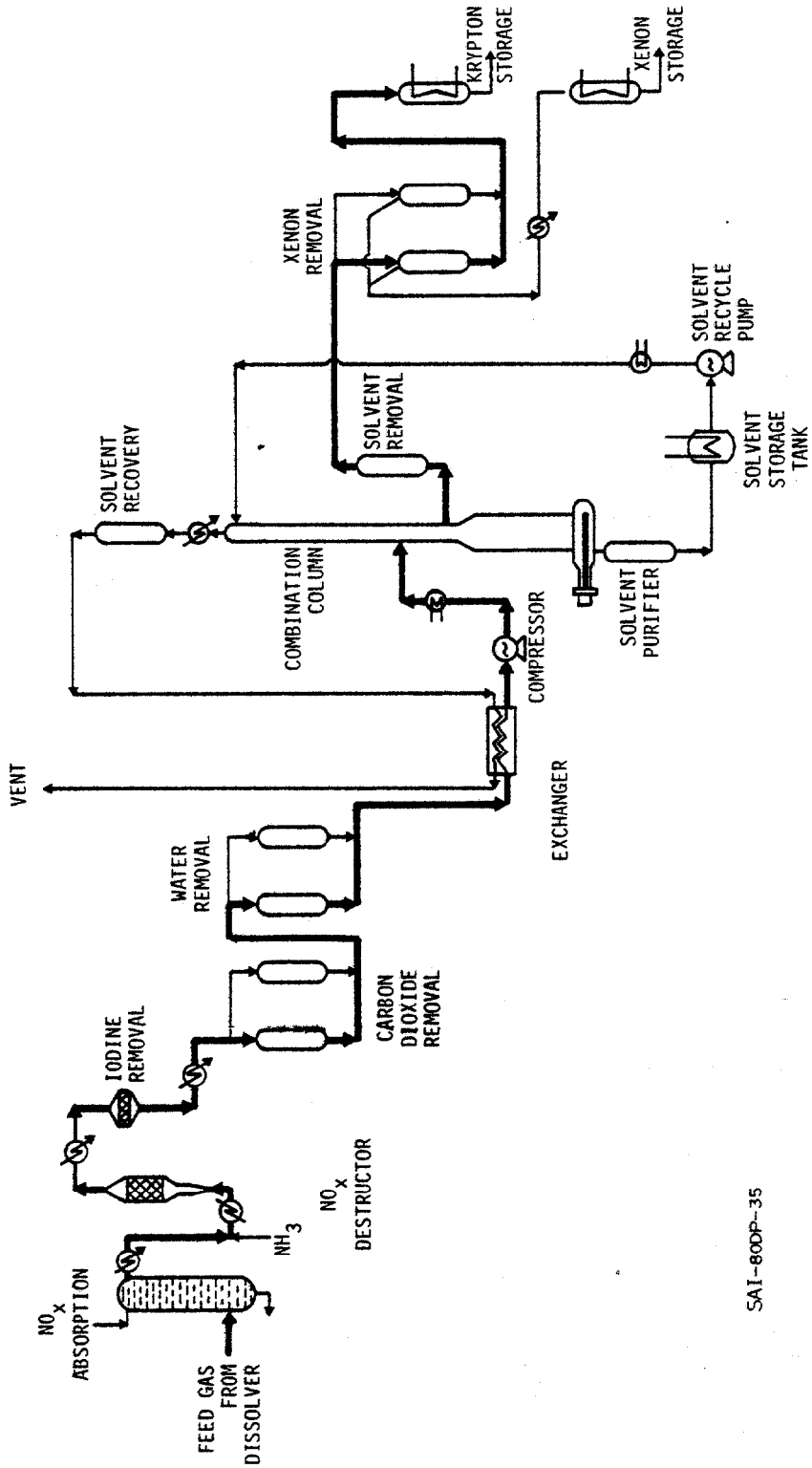

Figure 3. Noble Gas Recovery Using Selective Absorption From LWR Fuel Reprocessing

The tolerance of this process to accommodate contaminants that may breakthrough the pretreatment steps during process upsets is particularly attractive. The theory of the column design and operation appears to have been well defined. How well the process will respond to the wide variations in noble gas concentration during the dissolution cycle is not as clear. Because of higher pressures used and the relatively large solvent recycle rates, capital and operating costs will be high, although less than that for the cryogenic distillation processes. Solvent degradation due to radiolysis is expected to be quite small. Recently, attention has been given this process by a group at the Nuclear Research Center at Karlsruhe.[15] They are investigating the potential of operating a flurorcarbon absorption process near atmospheric pressure which could reduce the process cost and improve its safety aspects.

2.2.3 Selective Adsorption

The use of noble gas removal selective adsorption on synthetic zeolites has been proposed and some development done.[8,16,17] The concept has been receiving more attention recently by other workers.[18,19] This proposed process is a recent one and is much less developed than the previously described processes. Nevertheless, it shows considerable promise for being a viable, cost effective noble gas removal process that could be applied to the treatment of LWR fuel processing effluents.

Process Description. A simplified flow diagram of the selective adsorption process for the removal of noble gases from nuclear fuel reprocessing plants is presented in Figure 4. The pretreatment scheme for NO_x, iodine, water, and carbon dioxide removal is similar to that described for the selective absorption process using a fluorocarbon solvent. Xenon is removed from the krypton-xenon-air gas mixture at ambient temperature and pressure in one of two parallel adsorbent beds filled with a special synthetic moredenite adsorbent. One bed is on service while the other is being regenerated at 200 to 250°C. The effluent from the xenon removal column is cooled to about -80°C and passed through a precooled bed of another type of zeolite. The decontaminated off gas passes through this adsorbent and is vented while the krypton is adsorbed. Krypton is recovered by regeneration of the adsorbent at 60°C. The desorbed krypton is chilled again to -80°C and again collected in the precooled krypton concentration column which is filled with the same adsorbent used in the krypton removal columns. Krypton is desorbed from the krypton concentration column at 60°C and collected in a krypton freeze-out trap and is then expanded into storage cylinders.

The xenon and krypton removal beds are operated on 8-h adsorption cycles. A three-column arrangement is used for the krypton removal columns to allow sufficient time for heatup and cooldown during desorption and precooling of the columns. Krypton concentration factors between 30 and 40 are attainable during each adsorption-desorption cycle, depending on the desired DFs.

Process Performance. During engineering-scale tests DFs, of greater than 4×10^2 and 4×10^3 were obtained for krypton and xenon, respectively, which were the limits of the detection instrumentation used in the tests, so the actual DFs could have been much greater. The separation steps are sensitive to contaminant breakthrough, but the limits have not been established. There are a large number of valve operations in the process, but each are only operated on 8-h or longer cycles. There was no evidence of adsorbent deterioration or loss of adsorption efficiency in several hundred hours of test operation, but long-term tests are

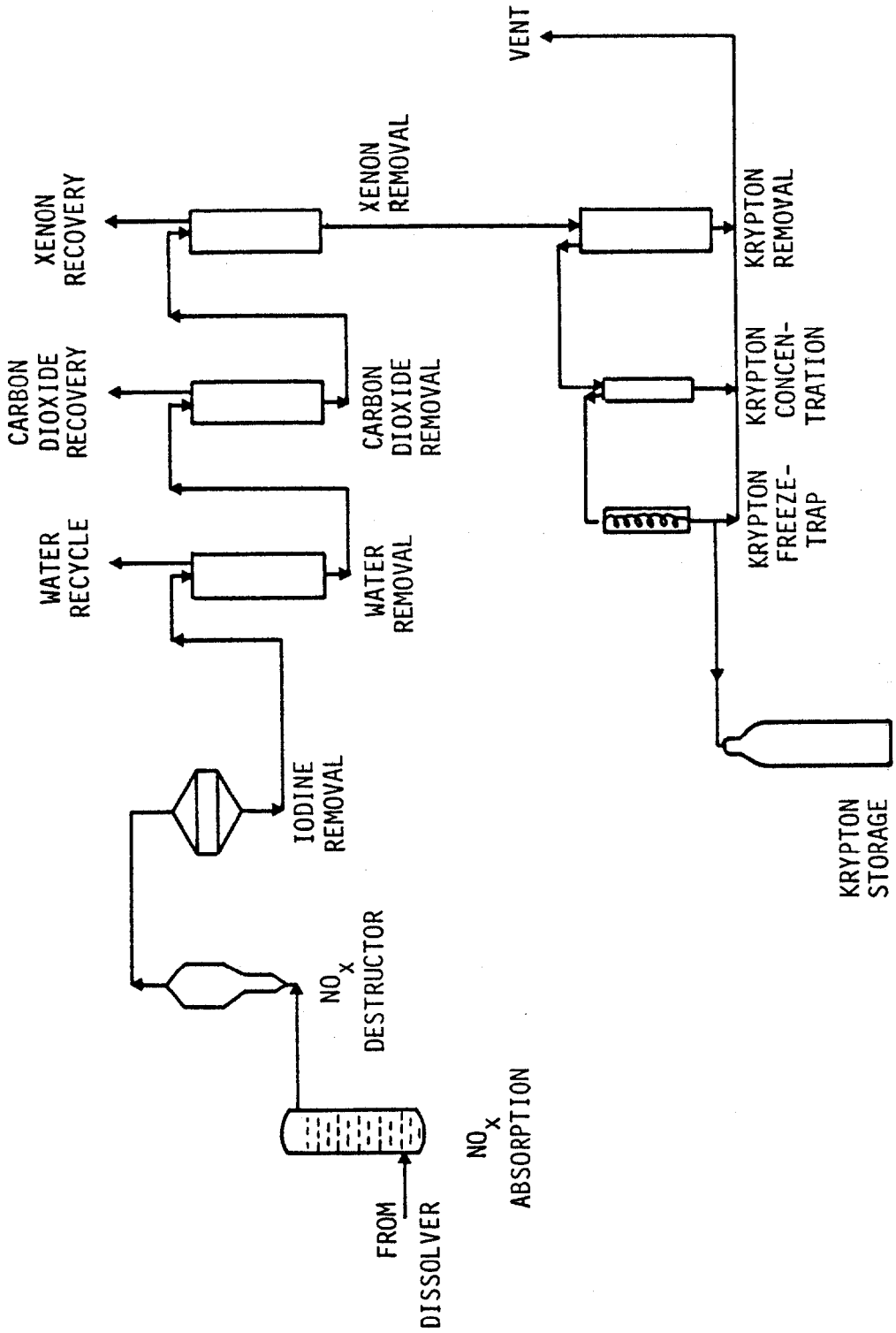

Figure 4. Simplied Flow Schematic of a Reprocessing Integrated Off-Gas Treatment System using Selective Adsorption.

necessary to verify the durability of the adsorbent under expected operational conditions.

The advantages of the selective adsorption process are: (1) operates at ambient pressure; (2) maintains low krypton inventories, the maximum is that collected in 8 hours of operation; (3) provides a high purity product; and (4) the capital and operating costs of this type of process would be considerably less than the other candidate processes. Until long-term tests are conducted with this process, it should not be considered for full-scale operations.

2.3 Conclusions

Although considerable effort and funds have been expended in the development of noble gas recovery systems for LWR reprocessing effluents, to date, there have been no long-term pilot-plant demonstrations under fully-simulated conditions. Therefore, the technology cannot be described as being fully demonstrated and ready for application to a large-scale plant. Both the actual noble gas separations systems using cryogenic distillation and selective absorption appear ready for demonstration in hot operations, but questions still remain regarding the pretreatment systems which could limit their effectiveness.

3. LWR Radioactive Waste Gas Treatment Systems

3.1 General

In LWR operations, nearly all of the noble gas releases occur in the main condenser steam jet air ejector in BWRs and from the various primary venting and letdown streams in PWRs. In all but one or two LWRs the noble gases are not separated from the off-gas streams but are delayed and allowed to decay. Most of the more recent designs provide 45- to 80- day holdup systems so that only the 10.8 year half-life Kr-85 remains in any significant concentrations after this time.

3.2 BWR Waste Gas Treatment Systems

3.2.1 System Description

A typical BWR radioactive waste gas treatment system for the most recent BWR designs is shown in Figure 5. The noncondensable waste gases are drawn from the main condensers with steam jet air ejectors, preheated, and passed through hydrogen recombiners. To recombine the radiolytically-formed hydrogen and oxygen which constitutes about 80% or more of the waste-gas streams. In earlier recombiner designs a number of premature hydrogen ignitions were experienced,[20] but this problem seems to have been resolved by improved design and steam injection into the gas stream prior to entering the preheater. Because of the high exothermic reaction of hydrogen and oxygen, which will result in a temperature rise of about 50°C for every percent of hydrogen in the feed stream, a large recirculation loop is maintained around the recombiner.

After the off gas from the recombiner is condensed and excess water removed, the remaining gas stream is less than 20% of its volume as it was removed from the main condenser. This gas flow is usually directed through a 30-min delay line to allow the shorter-lived isotopes to decay. The waste gas stream is cooled further, and the remaining moisture removed with desiccant dryers. The

Figure 5. Typical BWR Gaseous Radioactive Waste Processing Systems

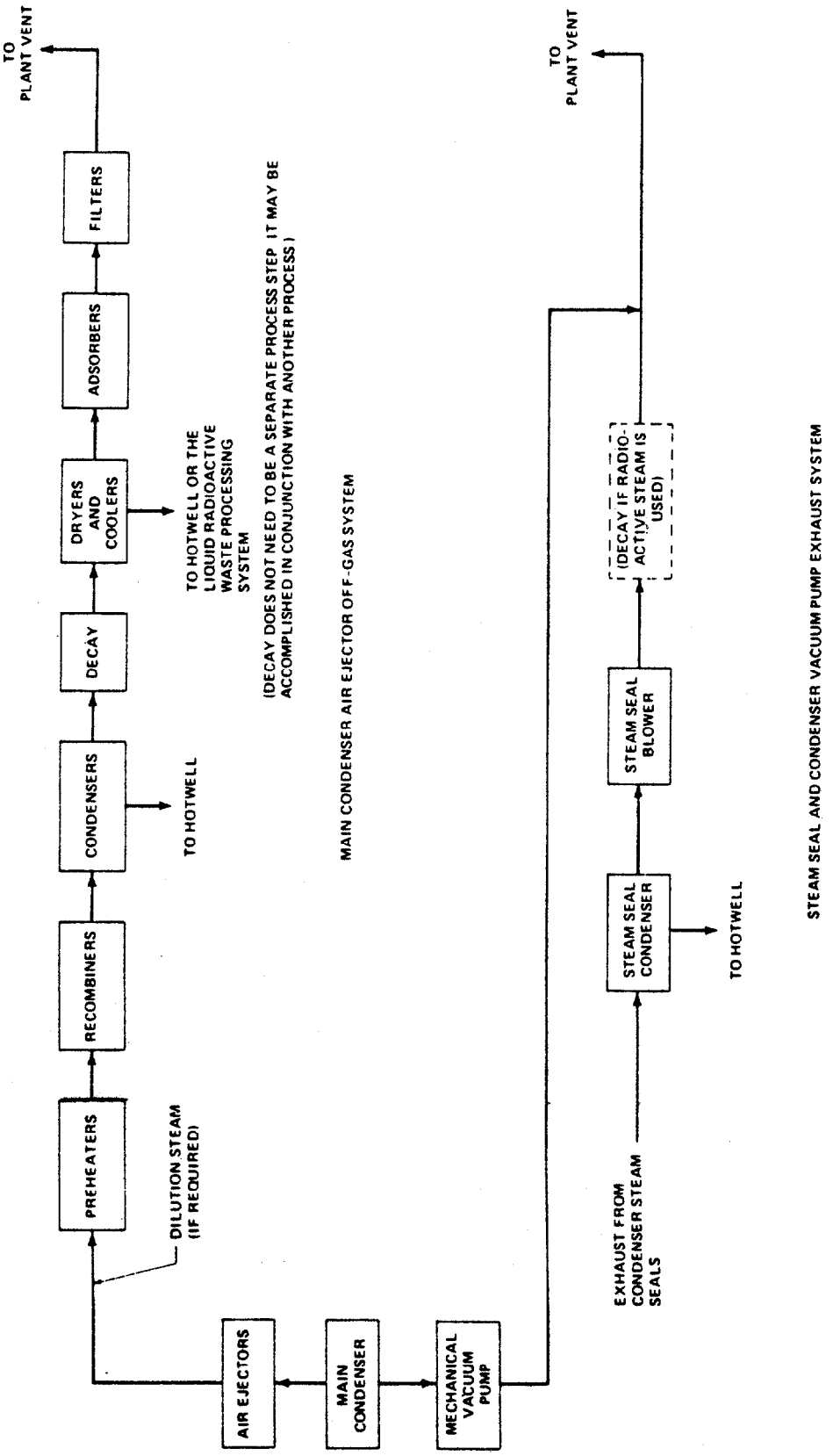

waste gas is then passed through several large tanks of activated charcoal adsorbent. Many of the more recent designs have gone to sub-ambient charcoal adsorption systems to reduce the size of the adsorbent beds.

3.2.2 System Performance.

A typical system performance of a BWR radioactive waste gas removal of recent design is shown in Table 1. Greater than 98% of the total annual release from a BWR is from the main condenser off gas. For those BWRs equipped with "clean" steam to the turbine gland seals, the percentage of annual radioactive release to the main condenser off gas is greater than 99%. With a 21,800 Kg (24-ton), activated charcoal sub-ambient cooled (-18^{0}C) system, the radioactive waste gas effluent can be reduced to about 282 Ci/y, about 240 Ci of which is krypton-85.

The estimated releases from other sources are also shown in Table 1. Any further reduction in these releases would be very costly and not very cost-effective. Of course, the earlier designs do not exhibit this high performance of noble gas control.

3.3 PWR Waste Gas Treatment Systems

3.3.1 System Description

There are many more different types of PWR radioactive waste systems than there are with BWRs but only several of the more common ones will be described. Others are described in ANSI/ANS 55.4-1979. In PWRs essentially all of the noble gases are retained in the primary coolant system and are only released when this system is vented or leaks. A much higher inventory of the radioactive noble gases are retained in the coolant system in PWRs than with BWRs. The amount of noble gas release from PWRs depends on the letdown technique and rate and the venting techniques and rates.

Generally, PWR waste off gases are compressed in waste gas storage tanks to allow for decay and are then either vented to the atmosphere or recycled. A typical system is shown in Figure 6. While the radioactive waste off gas rates from BWRs are on the order of 440 m^3/h (260 ft^3/min) before the recombiners, the waste off gas rates from PWRs average only several m^3/h (ft^3/min) or less. Many of the recent radioactive waste gas treatment systems are more typically depicted in Figure 7. This is a more versatile system and involves the use of recombiners. In addition to removing the hydrogen prior to storage, the design also allows the processing of the nitrogen cover gas used during shutdown for storage and reuse during the next shutdown.

Some PWR radioactive waste gas treatment systems also use charocal adsorbents for holdup and decay of the noble gases.

3.3.2 System Performance

The estimated annual releases and performance of several radioactive waste gas streams and treatment systems for a typical 1000 MWe PWR are shown in Table 2. All of these control systems are capable of reducing the noble gas emissions from PWRs by 99%, and some appraoch 99.9% reduction. About the only way further reduction of some of these systems could be improved is by removal and storage of krypton-85.

Table 1.

EFFECTIVENESS OF WASTE GAS TREATMENT SYSTEMS FOR NOBLE GASES IN BWRs (1000 MWe)

	Annual Release (Ci)
WASTE GAS TREATMENT SYSTEM	
30-MIN DELAY	1,260,000[a]
RECOMBINER WITH SUB-AMBIENT CHARCOAL ADSORPTION DELAY SYSTEM[b]	
80 d Xe 2.7 d Kr	282[a]
ESTIMATED FROM OTHER SOURCES	
CONTAINMENT BUILDING	125
AUXILIARY BUILDING	373
TURBINE BUILDING	3,637
RADWASTE BUILDING	1,144
GLAND SEAL EXHAUST	5,652
MECHANICAL VACUUM PUMP	1,800

[a]240 Ci Kr-85

[b]Based on a 21,800-Kg (240ton) system operating at -18°C (9°F), -29°C (20°F) dewpoint, 30 m^3/h (21 ft^3/min) air inleakage.

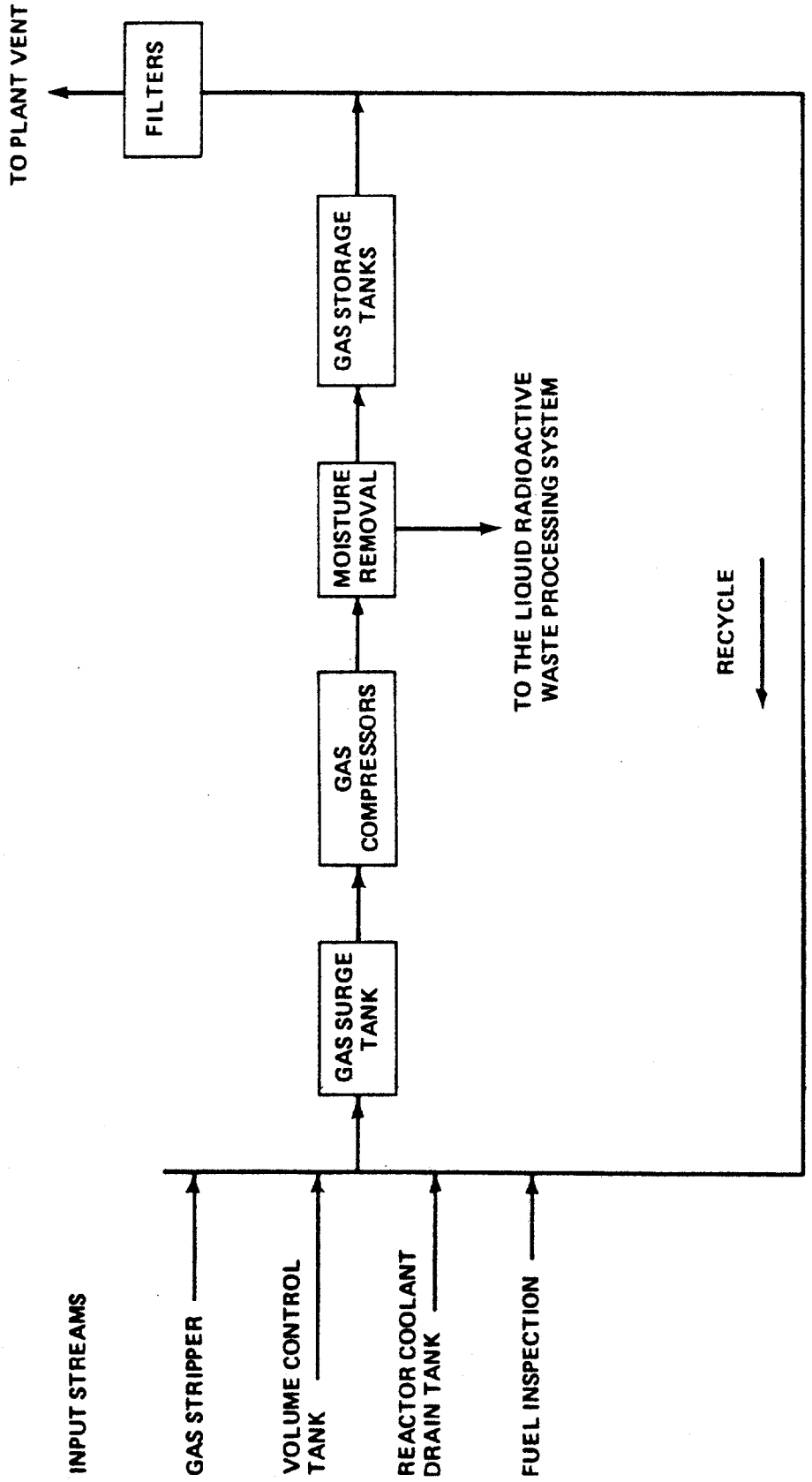

Figure 6. Typical PWR Tank Storage System

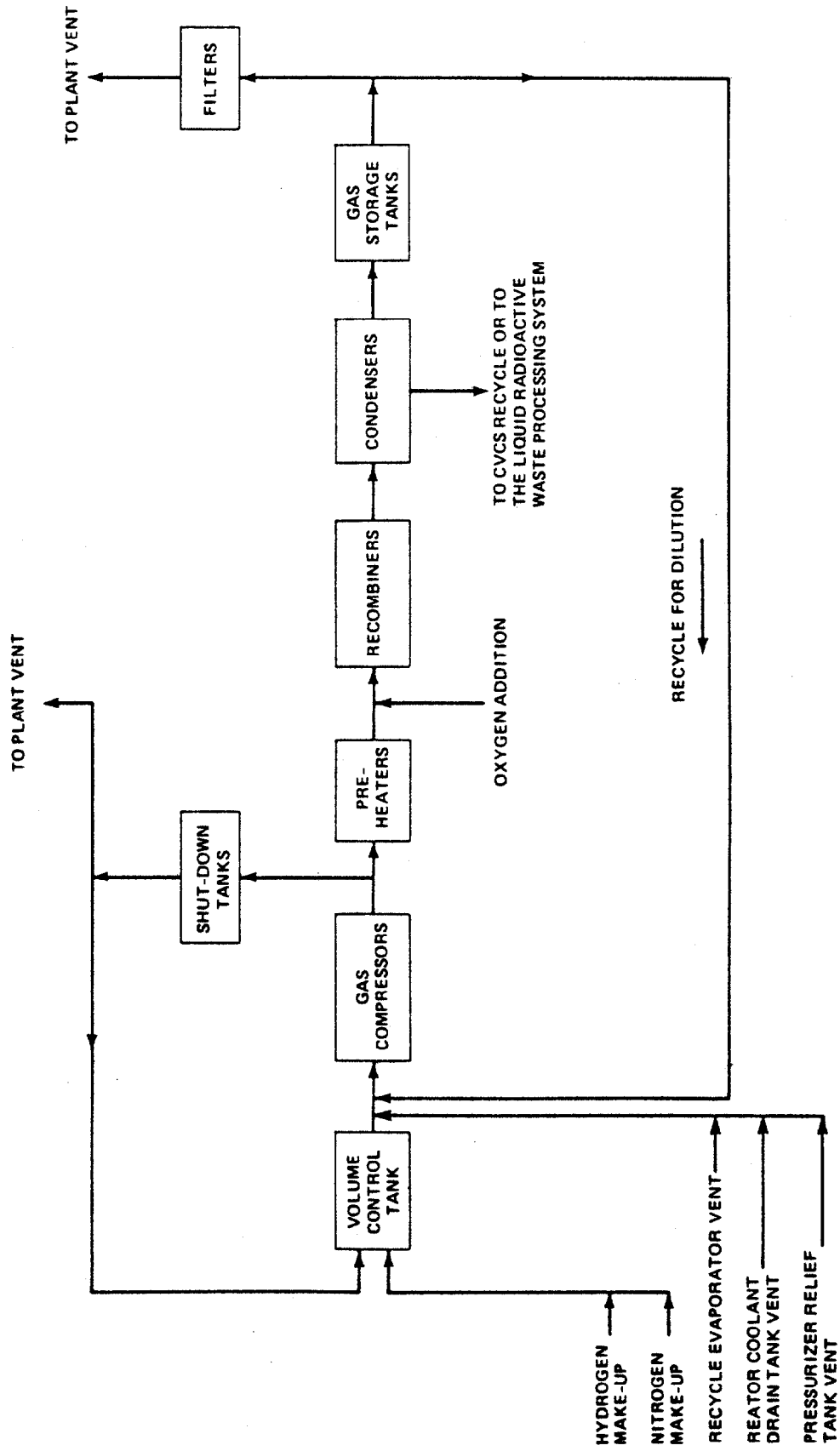

Figure 7. Typical PWR Volume Reduction Extended Storage System for Use with Volume Control Tank Stripping

Table 2.

EFFECTIVENESS OF VARIOUS WASTE GAS TREATMENT SYSTEMS FOR NOBLE GASES IN PWRs (1000 MWe)

	Annual Release[a] (Ci)
WASTE GAS TREATMENT SYSTEM	
UNTREATED	314,000[a]
CHARCOAL DELAY -	
72 d Xe 4 d Kr	329[a]
PRESSURIZED STORAGE	
60 d	741[a]
90 d	306[a]
ESTIMATED FROM OTHER SOURCES[b]	
CONTAINMENT BUILDING	88
AUXILIARY BUILDING	10

[a]300 Ci Kr-85

[b]Based on full letdown of 75 gal/min

3.4 Conclusions

The status of reactor radiocative waste off-gas treatment system technology for noble gases has been developed to the point where there appears little room or incentive for improvement. Techniques that are more cost-effective and more acceptable from a safety view point may be developed and applied, but any improvement in performance does not appear to be needed. However, all of these systems are based on holdup or delay and appear inadequate for handling greater off gas flows that may result from minor accidents involving abnormally high noble gas releases from the fuel into the coolant systems. The determination of just how significant this observation is would require a more comprehensive study than was done in the preparation of this paper.

4. Reactor Emergency Noble Gas Recovery Systems

Since the Three Mile Island, Unit 2, accident there has been considerable interest in evaluating the feasibility of applying noble gas treatment systems for the decontamination of reactor containment buildings. Based on the emotional response received at the TMI-2 venting hearings held by the NRC, it is unlikely the interest in decontaminating post-accident reactor containment building atmospheres will dwindle very rapidly. The problems associated with the design of effective containment venting are enormous as presented in an earlier session of the Conference. Some discussion on post-accident noble gas recovery systems is presented in this section.

4.1 Systems Considered for TMI-2

Several noble gas treatment systems were considered for removing the krypton-85 by NRC[21] before permission was granted for venting. Two charcoal adsorber systems were considered: an ambient temperature system and a refrigerated system. They would require 34,000 and 12,000 tons of charocal, respectively. The estimated materials cost for such systems is in excess of $100 million (not provided by NRC). Gas compression into 150,000 ft (28 miles) of 36-in. diameter steel pipe at a pressure of 340 psig (2345 kPa) was also considered. The materials cost for this type of system would probably be in excess of $60 million. Krypton recovery using cryogenic distillation and selective absorption with a fluorocarbon solvent were also considered. The equipment costs for these systems would probably be greater than $25 and $12 million, respectively. The times estimated to get these systems operational varied from 16 months to 4 years. The purpose of presenting this information is to illustrate the high costs associated with these systems and the long lead times needed to incorporate them.

4.2 Feasibility and Utility of Emergency Noble Gas Recovery Systems

As discussed in the Containment Venting Session of this conference, designing off gas treatment systems that will adequately treat the large gas flows that could conceivable be released in the worst case loss-of-coolant accident (LOCA) is a formidable task. To include a noble gas recovery step in such a system that would be responsive in the probable short notice does not appear to be technically feasible with existing technology. However, applying

Table 3.

OPTIONS CONSIDERED FOR RECOVERY OF THE NOBLE GASES AT TMI-2

System	Estimated Materials[a] and Energy Costs (Millions of Dollars)
• CHARCOAL ADSORPTION	> 100
• GAS COMPRESSION	> 60
• CRYOGENIC PROCESSING SYSTEM	> 25
• SELECTIVE ABSORPTION SYSTEM	> 12

[a]Does not include site preparation, installation, or on-site labor costs. These cost estimates were made by the author and were not included as part of the referenced NRC report.[21]

noble gas recovery systems for the decontamination of noble gases from containment after a LOCA or any other incident that may result in excessive releases of noble gases into the containment building appears to be well within existing technology.

There are several options that may be applicable to different situations. For reactors that are necessarily located in comparatively high population densities, the installation of permanent emergency noble gas recovery systems may be desirable. Such systems could be designed for rapid response in the case of a LOCA or lesser accidents and to supplement and/or backup the radioactive waste off-gas treatment system. In more remotely located nuclear power generating stations, it may be acceptable to just make provisions for bringing in a transportable unit that could be put into operation within a few hours after an incident.

Determining what a suitable capacity might be for an emergency noble gas recovery involves considerable value judgement. Treating a 5.7×10^4-m^3(2×10^6-ft^3) volume of radioactive-contaminated noble gas in a short period of time requires a very large removal system. The rate of recovery and the degree of decontamination needed would depend on the level of contamination, the perceived need for re-entry, potential population exposure, and many other considerations. The needed recovery system capacities to reduce the contamination to a fraction of its initial post-accident level is summarized in Table 4.

4.3 Candidate Processes

Three noble gas separations processes appear suitable for application to reactor emergency noble gas recovery systems: cryogenic distillation, selective absorption using a fluorocarbon solvent, and selective adsorption using inorganic adsorbents. With the exception of the probable need for hydrogen control, the pretreatment requirements for any of the candidate recovery processes are not major and are within existing technology. The fact that the feed rate would be uniform and constant eliminates essentially all of the concerns that exist in applying these technologies to reprocessing plants in this regard. The use of hydrogen recombiner systems would probably need to be included in an emergency system design, but its use would probably not be needed for many of the postulated accident situations.

The probable uninstalled, capital cost range for the proposed candiate emergency noble gas recovery systems with capacities of about 400 m^3/h (200 ft^3/min), excluding the recombiner system, is given in Table 5. The installation costs would likely be somewhat site specific and the determined site enclosure requirements to accomodate the systems.

4.3.1 Cryogenic Distillation

The cryogenic distillation system is the most developed. This system would require a recombiner to remove the oxygen to minimize the possible formation of ozone. It would appear that this function could be combined with the containment hydrogen recombiner, but a more elaborate control system would be needed. The cryogenic distillation unit would be less transportable than the other candidate processes.

Table 4.

Estimated Time required to Reduce Contaminant Concentrations to Given Levels with Various Recovery System Capacities

Off-Gas Treatment System Capacity (m^3/h)	(ft^3/min)	Time to reduce the containment concentrations to a % of initial, after-accident concentration (days)			
		10%	5%	1%	0.1%
85	50	64	83	128	192
170	100	32	42	64	96
340	200	16	21	32	48
510	300	11	14	21	32
680	400	8	11	16	24

Table 5.

Candidate Processes for Future Reactor Emergency Noble Gas Recovery Systems

	Capital Equipment[a] Cost Estimate (Millions of Dollars)
Cryogenic Distillation	20 - 25
Selective Absorption	12 - 16[a]
Selective Adsorption	6 - 8[b]

[a]Shop-fabricated costs for 200 ft^3/min system

[b]Does not include hydrogen recombiner

4.3.2 Selective Absorption

The technique of selective absorption is commonly used in the petrochemical industry, and the ORNL pilot-plant studies appear to have well characterized a fluorocarbon solvent for use in removing noble gases with this technique. The process has been demonstrated to show a high tolerance to a number of contaminants that may be present in a post-accident containment accident. Because the likelihood of ozone formation is less than that for the cyrogenic distillation technique, the pretreatment requirements are less costly. Solvent costs would be greater than for liquid nitrogen, and the primary column costs would be greater because of the higher working pressure. The higher working pressure increases the potential of accidental release in the case of a column rupture, but the krypton inventory at any particular time is much lower with a fluorocarbon adsorption system. The transportability of the fluorocarbon process is about equivalent to that of the cryogenic distillation process.

4.3.3 Selective Adsorption

The selective adsorption technique has the potential for being the most attractive of all the candidate processes in that it (1) operates at essentially ambient pressure, (2) maintains low krypton inventories, (3) is more compact and more transportable than the other candidate processes, and (4) would cost considerably less to build and operate. The pretreatment requirements will likely be less than the other processes, but this has not been fully demonstrated. This process needs to be demonstrated in long-term pilot-plant tests before it should be considered for application to verify its claimed performance.

4.4 Conclusions

Technology appears to exist for applying emergency noble gas recovery systems for decontaminating reactor containment buildings, provided the flow rates are moderate, about 850 m^3/h (500 ft^3/min) or less. Because of the many postulated accident scenarios, a comprehensive study should be done to more fully characterize the probable flow rates and off gas compositions. With this information, acceptable performance criteria could be established for the noble gas recovery system, and suitable designs performed and accurate cost estimates made.

References

1. D.T. Pence and T.R. Thomas, "NO_X Abatement at Nuclear Processing Plants", Proceedings of the 2nd AEC Environmental Protection Conference, WASH-1332(74) (April 16, 1974).

2. T.R. Thomas and D.H. Munger, An Evaluation of NO_X Abatement by NH_3 over Hydrogen Mordenite for Nuclear Fuel Reprocessing Plants, ICP-1133 (January 1978).

3. J.F. Riley, ORNL-3176, p. 33 (1961).

4. R. von Ammon, G. Burkhardt, E. Hutter, and G. Neffe, "Development of a Cryogenic Krypton-Separation System for the Off Gas of Reprocessing Plants", Proceedings, 15th DOE Nuclear Air Cleaning Conference, CONF-780819, p. 640, (August 1978).

5. R. von Ammon and G. Knittel, "Catalytic Reduction of O_2 and NO_X - A Critical Pretreatment Step for the Cryogenic Retention of Kr-85", presented at the IAEA/OECD International Symposium on the Management of Gaseous Wastes from Nuclear Facilities, Vienna Austria, SM-245/12 (February 18-22, 1980).

6. A. Bruggeman, L. Meynendonckx, and W.R.A. Goossens, "Elimination of NO_X by Selective Reduction with NH_3", Proceedings 15th DOE Nuclear Air Cleaning Conference, CONF-781-819, p. 614 (August 1978).

7. G.E.R. Collard, SCK/CEN Mole, Belgium private communication (February 1980).

8. D.T. Pence, C.C. Chou, and W.J. Paplawsky, An Integrated Off-Gas Treatment System Design for Nuclear Fuel Reprocessing Plants Using Selctive Adsorption, SAI/00979-2 (August 1979).

9. K.J. Knotz, D.W. Holladay, C.W. Forsberg, G.L. Hagg, "Processes for Control of $^{14}CO_2$ During Reprocessing" presented at the IAEA/OECD International Symposium on the Management of Gaseous Wastes from Nuclear Facilities, Vienna Austria, SM-245/29 (February 18-22, 1980).

10. G.L. Hagg, "Carbon-14 Immobilization via the CO_2-$Ba(OH)_2$ Hydrate Gas-Solid Reaction", to be published in the Proceedings of the 16th DOE Nuclear Air Cleaning Conference, San Diego, California (October 20-23, 1980).

11. C.L. Bendixsen and G.F. Offutt, Rare Gas Recovery Facility at the Idaho Chemical Processing Plant, IN-1221 (April 1968).

12. B. An, Nuclear Engineering Department, Kobe Steel Ltd., Kobe, Japan, private communication (October 1980).

13. J.R. Merriman, M.J. Stephenson, B.E. Kanak, and D.K. Little, "Removal of Noble Gases by Selective Absorption", presented at the IAEA/OECD International Symposium on the Management of Gaseous Wastes from Nuclear Facilities IAEA-SM-245-53, Vienna, Austria (February 18-22, 1980).

14. M.J. Stephenson, Oak Ridge National Laboratory, private communication (October 1980).

15. E. Henrich, Nuclear Research Center, Karlsruhe, West Germany, private communication (February 1980).

16. D.T. Pence, C.C. Chou, J.D. Christian, and W.J. Paplawsky, "Noble Gas Separation with the Use of Inorganic Adsorbents", Proceedings of the 15th DOE Nuclear Air Cleaning Conference, CONF, 780819, p. 512 (August 1978).

17. D.T. Pence and W.J. Paplawsky, "Noble Gas Separtion from Nuclear Reactor Effluents Using Selective Adsorption with Inorganic Adsorbents" to be published in the Proceedings of the 16th DOE Nuclear Air Cleaning Conference, San Diego, California (October 20-23, 1980).

18. D.M. Ruthven, J.S. Devgun, F.H. Tezel, and T.S. Sridhar, "Removal of Krypton from N_2 by Selective Adsorption", Ibid.

19. P.R. Monson, "Krypton Retention on Solid Adsorbents" Ibid.

20. R. Lo, B. Grimes, L. Barrett, and D. Eisenhut, Technical Report on Operating Expereince with Boiling Water Reactor Off Gas Systems, NUREG-0442, (April 1978).

21. NRC. TMI Support Staff, Final Environmental Assessment for Decontamination of the Three Mile Island Unite 2 Reactor Building Atmosphere, NUREG-0662, Vol. I (May 1980).

DISCUSSION

MONSON: I was wondering about the cryogenic distillation and oxygen removal. How real is the ozone problem in that system, and isn't the system at Idaho run without oxygen removal?

PENCE: Yes, and they had some problems, too, I think. They had one or two ozone explosions there. But, again, that system was not designed to remove oxygen. Others from Idaho may wish to speak on this. They believe they can tolerate the oxygen level safely. The question in most people's minds is that when you design a very large system, there is an element of doubt. From a talk the other day, we have some hope that we may be able to live within the oxygen limits and the concentration that may end up with a product. The problem of the ozone and the formation of it--yes, indeed, it is real. It is only a problem in the liquid oxygen and liquid nitrogen system--wherever the G value is high enough to get a higher production rate or equivalent; or the equilibrium is such that you get appreciable concentrations of ozone in the system. In the four carbon system, you do not have the liquid interface, and the G value is probably such that it is less than the decomposition rate and single cell selective adsorption.

FLUKE: I would just like to make a comment on noble gases and the problems of treating krypton-85. As you know, at

Three Mile Island the release of 8-13 million curies of xenon-133 resulted in a population dose of 3500 man-rem. If the remaining krypton-85 was just vented, it would have resulted in an additional exposure of 1 man-rem. A hundred million dollars for 34,000 tons of charcoal to trap that krypton does not seem like a very good investment. That money might be better spent developing high speed dental x-ray film. In the Province of Ontario, for example, the population dose from dental x-rays is something like 200,000 man-rem, annually.

PENCE: I agree with you completely, but I think it is not a dose problem. The way John Collins describes it, it is an emotional problem. I think we are going to be forced into it, mainly, because of the way the public perceives it as a hazard. Also, some of the people who are screening it and who are supposed to be knowledgeable are saying that it can be dangerous. I do not want to give in to that. I agree with you completely. As far as I am concerned there is very little need for that kind of system even though there is nothing wrong with it. I particularly liked the discussion about noble gases in the recent environmental assessment. One of the examples I would like to share with you is that the consequence of the release of the remaining noble gases would be to give a dose equivalent to sleeping with a person eight hours a night for eight months. That would be the increased dose.

FLUKE: I think sleeping with someone is worse than that.

PENCE: I am not supposing that is a real basis for dose standards, but standard setting is a real need from a technical point of view.

HERRMANN: I was asked to comment on the ozone problem in cryogenic systems. I have the same opinion as the people in Idaho that we can tolerate quite, or comparatively, large amounts of ozone. I hesitate to give any number as, of course, this is difficult, but I think that the oxygen removal step in the treatment could be designed so that several hundred ppm of oxygen could pass through and reach the cryogenic columns. It might even be possible to live without an oxygen removal system, as was demonstrated in Idaho. But, the problem is that the licensing people will not allow us to do this. If we want to demonstrate a cryogenic noble gas removal system in a real offgas, we are forced to remove the oxygen down to very low numbers.

PENCE: Even if you can demonstrate safety with very high oxygen concentrations, it will probably not prevent us from having to include some sort of oxygen treatment system, but it might decrease the requirements for how rigid it must be. This would make me more comfortable with the operational systems.

EVONIUK: Just one comment, you said you did not want to get involved in the political aspects and the emotionalism of having to do something with the krypton-85 and the other noble gases. I just wonder why the technical and scientific community has to knuckle under to people who have such a poor basis for their viewpoint, namely, emotionalism. It looks to me like it is a spoiled child telling the parent what to do and we cannot stand up and prove our

point. We spend millions of dollars playing around with technical challenges. True, they are technical and provide us a job, but there are other problems facing the world that are more important. The thing I wondered about is why we, as a group or as a community, can't do something to change those attitudes.

FIRST: Thank you for your comment. I think it is a bit off the subject of the Critical Review and I will not ask the reviewer to respond.

PENZHORN: I would like to come back to the ozone problem. We have carried out an investigation of the explosion limits of ozone in oxygen and in noble gases. We find that the explosion limits and detonation limits in the noble gases are considerably lower than in oxygen. This may explain why fairly high concentrations of ozone can be tolerated in the O_2/Xe/Kr system.

RUTHVEN: I just wanted to ask about the decontamination factors which were quoted. Is there some standard concentration level at which these figures are quoted? If the systems were perfectly linear, the concentration level would be immaterial since the principle of the decontamination factor assumes perfect linearity. But I suspect these systems are not perfectly linear and the decontamination factor will probably vary quite widely with concentration level. I wondered if there is some standard level at which these are quoted for krypton removal, for instance.

PENCE: Not really. There are several different limits in the various countries and that is why we avoided addressing it. In this country, it is set at 50,000 curies per 1000 megawatt unit electric generator. This works out to be a decontamination factor somewhere between 20 and 100. So, you do not really need a high decontamination factor. Most of us dealing with systems realize we are going to get an overall decontamination factor of 100 when we need, maybe, 20. It is an overkill.

RUTHVEN: My problem is that, in principle, it takes the same decontamination factor to get from a level of 100 to 10 as it does to get from 10 to 1, but in practice, I suspect this is not the case because the system is not perfectly linear. And therefore, the decontamination system is likely to be less, or could be less, effective at certain concentration ranges than it is at others. So, I wonder if there is some standard level, for instance, of krypton; not a total discharge but a standard concentration, at which this is measured.

PENCE: The only thing I can say is that the concentration one might expect in processing effluents varies from a few ppm of krypton-85 to 300-400 ppm in the dissolver offgases by the time they get down to the noble gas treatment system.

RUTHVEN: That is quite a range.

PENCE: That is the only number I can give you. It goes, of course, from almost zero because it depends on the dissolver cycle. If it is a continuous dissolver, it would be more uniform;

if it is batch, it is just going to go from spike to down. It depends on how well we can spread it out during the process. I really would like it uniform.

BROWN: Your review indicated the difference in potential capital costs for three possible systems for krypton recovery. Embedded in those estimates, which you said had various degrees of uncertainty associated with them, is a problem we have in decision-making. I think the rough numbers you quoted were $25 million for a cryogenic system, $11 million for an adsorption system, and $6 million for an absorption system. They are all at various stages of development. What I think you identified for us was that the capital cost estimate seems to be inversely proportional to the amount we know about the system. How do we deal with this if someone is making the decision? Obviously, the Japanese decided to go with the cryogenic installation. Dr. von Ammon indicated the work they are doing in Germany. Dr. Henrich indicated some new development work being done with fluorocarbon absorption. New groups of people in installations are going to make decisions. How do we start to put some numbers on the uncertainties, depending on the state of development? I think that is an important question because it is all too easy for someone dealing with this in the abstract to make a wrong decision because of these uncertainties.

PENCE: I agree. I think what you are faced with is that you go with the system you know the most about. And, of course, if you know it better, you know the costs better. The less developed systems you do not know as well, and you do not go with those systems until they are fully developed. This type of approach prevents us from developing a system that is too costly; it is kind of a chicken or egg dilemma as to which way you go. I agree with your comments, but I do not have an answer.

COLLARD: I want to begin this by discussing the decontamination factor. We worked with about 250 ppm krypton and the total column gave a decontamination factor of 500. We made a run with 2,500 ppm and a decontamination factor of about 100 was achieved in a height of about 10 cm packing. And there you are in the linear range of the distillation. So, you have something like 100,000 for a little column with packing of less than 1 meter, even with high concentrations. Now, perhaps I can make a comment about the inventory of krypton. Up to now, the literature does not show that it is possible to maintain a very low inventory of krypton in the column; although it is difficult in a packed column with a low liquid holdup and perhaps a little more difficult in a plate column. In a space of 1 meter, you can separate argon (which is in the gases), krypton, and xenon. If you apply the conventional techniques of column distillation, where you separate the different products in the column, you can hold the total amount of krypton in the column to about 50 to 100 cc liquid, which corresponds to a few hundred curies (which you mentioned in your paper). I think the holdup of krypton can be held very low in the column. You just have to apply conventional techniques. But it makes the regulation of the column a little difficult.

SRIDHAR: This is a follow-up on the comments by Russell Brown. We have just made a very modest beginning in this area of gas

treatment and development work, and we are experiencing the same kinds of problems he posed; that is to say, where would you put your money in terms of development? What we have done is to look at the scale of technology development and, also, to assign certain raw numbers, so to say, to help us decide which way to go as regards R&D direction. Certain cases, such as in krypton abatement we did find that there may be some worthwhile safety reasoning and cost justification to go to inorganic adsorber systems, and that is the way we went. We have presented a paper on this particular area of research and development we have undertaken. But I think that it is an engineering judgment that has to be made at some point or other, and we have at present only these raw numbers to look at and make that kind of decision.