SESSION VI

MONITORING

Tuesday, August 29, 1972
CHAIRMAN: H. J. Ettinger

INVESTIGATIONS OF A CONTINUOUS FLOW, SINGLE PARTICLE CONDENSATION NUCLEI COUNTER — A. Lieberman, H. M. Ogle, C. Falkner

MONITORING AEROSOL CONCENTRATIONS WITH PIEZOELECTRIC CRYSTALS — D. L. Brenchley, T. E. Carpenter

MONITORS FOR ALPHA AND BETA ACTIVITIY IN AIR EXHAUST DUCTS AND STACKS — R. A. Moyer, G. Hayes

AN EVALUATION OF MATERIALS AND TECHNIQUES USED FOR MONITORING AIRBORNE RADIOIODINE SPECIES — J. H. Keller, T. R. Thomas, D. T. Pence, W. J. Maeck

THE EVALUATION OF A STACK SAMPLING SYSTEM USING A HELIUM MASS SPECTROMETER LEAK DETECTOR — W. B. Kerr, R. E. McAtee, L. T. Lakey

CHAIRMAN'S OPENING REMARKS:

So far, most of the discussion has been related to air cleaning and accident analysis. The first half of this afternoon's session will be devoted to aerosol monitoring for contaminants or air sampling. Our five speakers will discuss a wide variety of different applications ranging from condensation nuclei counters in conjunction with light scatter, to mass concentration, to radioactive analysis. I'm sure it will be a very varied and diversified session.

INVESTIGATIONS OF A CONTINUOUS FLOW SINGLE PARTICLE CONDENSATION NUCLEI COUNTER

A. Lieberman, H. M. Ogle, C. Falkner
Royco Instruments, Inc.
Menlo Park, California

Abstract

A combination of an optical single particle counter with a continuous flow cloud chamber is being investigated as a sub-micron particle analyzer. The flow, temperature, and pressure characteristics necessary to maintain nuclei activation and particle growth have been explored with various vapors. The conditions necessary to grow and detect individual particles in the 0.01 micron size range have been explored. Some of the limitations and potentials of this technique are presented.

I. Introduction

Condensation nuclei, often referred to as Aitken nuclei, are solid or liquid aerosol particles in the general size range of 0.001 to 1 micrometer radius. Nuclei are formed naturally through processes such as evaporation of sea salt spray, by gas phase reactions in the atmosphere, by reintrainment of small solid particulate debris from the surface of the earth, and by many anthropogenic processes, particularly combustion. Concentrations from these sources range from the rural levels of a few thousand particles per cubic centimeter of air to urban area concentrations that may range to 10^7 particles per cubic centimeter of air, particularly in the vicinity of heavy concentrations of vehicles. In addition to these more or less natural sources of condensation nuclei, gas flame generated nuclei are used for some filter penetration testing in order to develop the high concentration required upstream of HEPA filters.

The measurement of these nuclei is usually accomplished by subjecting a sample of air to a known supersaturation and observing the concentration of micron or larger size droplets which form after a period of a few hundred milliseconds or more. Two common methods are used to obtain supersaturation; the first[1] is to subject the gas sample to a rapid adiabatic expansion after saturating with water vapor in a humidifier chamber. The degree of supersaturation attained is the vapor pressure of the water at the temperature of the sample divided by the saturation vapor pressure of the water at the temperature attained after expansion. Typical values employed in current instruments using a quick acting valve for expansion range from 300 to 400% for most atmospheric measurements. In another type of instrument[2] the air sample is injected into a static diffusion chamber wherein supersaturations to the range of 0.1 to 2% are achieved by establishing constant temperature and humidity profiles.

Once the nuclei have passed through the zone of supersaturation, vapor will condense upon the small particles and result in growth of droplets to a diameter of several microns. At this point, the droplets are optically visible and can be detected by one of several means. The most common technique is to use a photodetector to determine light transmission or scattering from a fixed volume of space in which the droplets exist.

Some problems are present with both instrument types. With the expansion chamber system it is necessary to stabilize two overall characteristics of the chamber. First, the instrument should be set to respond to a fixed portion of the nuclei size spectrum; e.g., constant supersaturation and a fixed time interval between expansion and measurement must be established. Secondly, the instrument must carry out a cyclic operation to permit expansion, stable growth, observation, cleanout, compression, expansion, etc. Some errors are introduced by these requirements.[3] The most active nuclei will form droplets first and may fall out of the viewing volume. If the time between expansion and observation is not adequate then only the most active nuclei will be observed.

In a diffusion system it has been pointed out by Squires[4] that a number of problems exist. For example, there will inevitably be some dispersion in the droplet size, as the most active nuclei, i.e., those with lowest critical supersaturations, are activated first then grow slightly faster than those with higher critical supersaturations. Problems arise when transient supersaturations are caused during establishment of the desired temperature and humidity gradients[5] Because of these difficulties, certain restrictions exist in design and operation of conventional diffusion chambers. One effect is that sample volume is usually small. With repeated samples, the average sampling rate achievable with non-polluted air is typically ten to twenty nuclei per second.

II. Design

A modified condensation nuclei counter design was investigated to minimize some of the problems that have been reported in the past. This system is a two chamber device. In the first chamber, the air sample is humidified by passing it over a heated vaporizing liquid. In this investigation, a heated liquid pool was used rather than heated wet porous plates in order to permit greater ease in operation. The moist sample air was then passed into the cooled growth chamber through a heated nozzle. The nozzle was heated in order to prevent condensation on cool surfaces at the interface between the warm and cold chambers. The cool chamber was maintained at a temperature sufficiently low to provide adequate supersaturation by a cold bath passing between the double walls of the cold humidifier chamber growth section. At the lower end of the humidifier chamber a conventional light scattering single particle counter inlet was placed. The grown droplets are counted and sized by the particle counter, thus allowing continuous measurements of at least 1,000 nuclei (droplets) per second.

This arrangement has a basic advantage that at the cost of some additional complexity, it physically separates the two essential functions of first, generating the supersaturation and growing the droplets, and second, recording the droplets. The droplets are measured and recorded immediately after growth.

Figure 1 shows a schematic of the continuous flow condensation nuclei counter. The filterpack consists of seven 0.1-micron pore size membrane filters in series. It was found that this was adequate to remove essentially all naturally occuring nuclei from the sample air stream. A heated nichrome wire was used for nuclei generation purposes. The humidifier was glass with a glass enclosed resistance heater to raise the liquid pool temperature to the desired point. The sample jet inlet extended above the surface of the liquid pool so that only vapor was allowed to penetrate through the sample jet orifice at the end in the condenser. The condenser was cooled with mixture of water and butylcellusolve with a dry ice-water-cellusolve mixture in the heat ex-

changer. The Royco Model 225 particle counter was placed at the open lower end of the vertical condenser chamber. This particle counter was set to sample at 285 milliliters per minute. The sample inlet was placed at various levels in the condenser so as to vary the time period between nuclei activation and sample collection. The particle counter was adjusted to determine particle sizes greater than 0.5, 0.7, 1.4, 3 and 5 microns in diameter.

III. Results

The flow, temperature and pressure characteristics necessary to maintain nuclei activation and particle growth were explored primarily with water vapor. Some experiments with ethyl alcohol were carried out but since these essentially duplicate the water vapor experiments they will not be reported at this time. We have investigated the effect of some changes in sample flow rate, in time for droplet growth, in vapor supply, and plan in carrying out further studies in the future in terms of nuclei composition and initial size.

For the most part, data were obtained in terms of total number of droplets larger than 0.5 microns observed. Figure 2 shows the effect of change in the power input to the nichrome wire under constant conditions of temperature and flow. The ordinate shows concentration of droplets detected by the particle counter in the size range 0.5 microns and greater. The abscissa shows the power inputs to the nichrome wire in watts. It is seen that the logarithm of the nuclei concentration is a direct function of the power input to the nuclei source. It has been noted previously that a heated metal wire is a poor source of nuclei.[6] This is verified by the generally low concentration of nuclei produced. At higher power inputs, it was noted that the wires tended to melt quite frequently. Figure 3 shows the effect of varying the inlet sample flow rate which changes the available time for nuclei growth before measurement. As the time increases the droplet concentration increases to an asymptotic value for any single supersaturation. This indicates that all of the available (activatable at that supersaturation level) nuclei have grown to optically countable size. At higher nuclei concentrations, the asymptote is higher.

Figure 4 shows a plot of nuclei concentration as a function of available water vapor for a single nuclei generator power level. As anticipated, the droplet concentration increases with supersaturation. This indicates that more nuclei are activated as the available moisture increases.

Table I shows the particle size distribution for typical droplets obtained under conditions shown below the table. These conditions, referring back to Figure 2, are those wherein the droplets have not yet grown to an equilibrium point. Had equilibrium been attained, the activated nuclei should grow to form a more or less monodisperse droplet at sizes where, in the entering sample, there were scarcely any particles to be measured. Table I does, however, show an atypical particle size distribution. More larger particles are seen than would be expected normally.

Further work will be carried on with this system to improve stability and to define exactly the conditions for optimum measurement of nuclei concentrations and sizes.

This work has been carried on under sponsorship of the State of California Air Resources Board with Dr. Jack Suder acting as Project Monitor.

References

(1) Nolan, P. J. and L. W. Pollak, "The Calibration of a Photo-electric Nucleus Counter", Proc. Roy. Irish Acad., 51, (A2), 9, (1946).

(2) Radke, L. F. and P. V. Hobbs, "An Automatic Cloud Condensation Nuclei Counter", J Appl. Meteorol., 8, 105, (1969).

(3) Haberl, J. B. and S. J. Fusco, "Condensation Nuclei Counters: Theory and Principles of Operation", Proc. 11th Conf. on Methods in Air Poll. and Ind. Hyg., Berkeley, California, April, 1970.

(4) Squires, P., "Diffusion Chambers for the Measurement of Cloud Nuclei", Accepted J. Recherches Atmos., 1972.

(5) Saxena, V. F. and J. C. Carstens, "On the Operation of Thermal Diffusion Cloud Chambers", J. Recherches Atmos., 5, 11, (1971).

(6) Davis, R. E. and J. J. Clifton, "A New Method for In Situ Testing High Efficiency Air Filters using Condensation Nuclei as the Test Aerosol", Filtration and Separation, 3, 473, (1966).

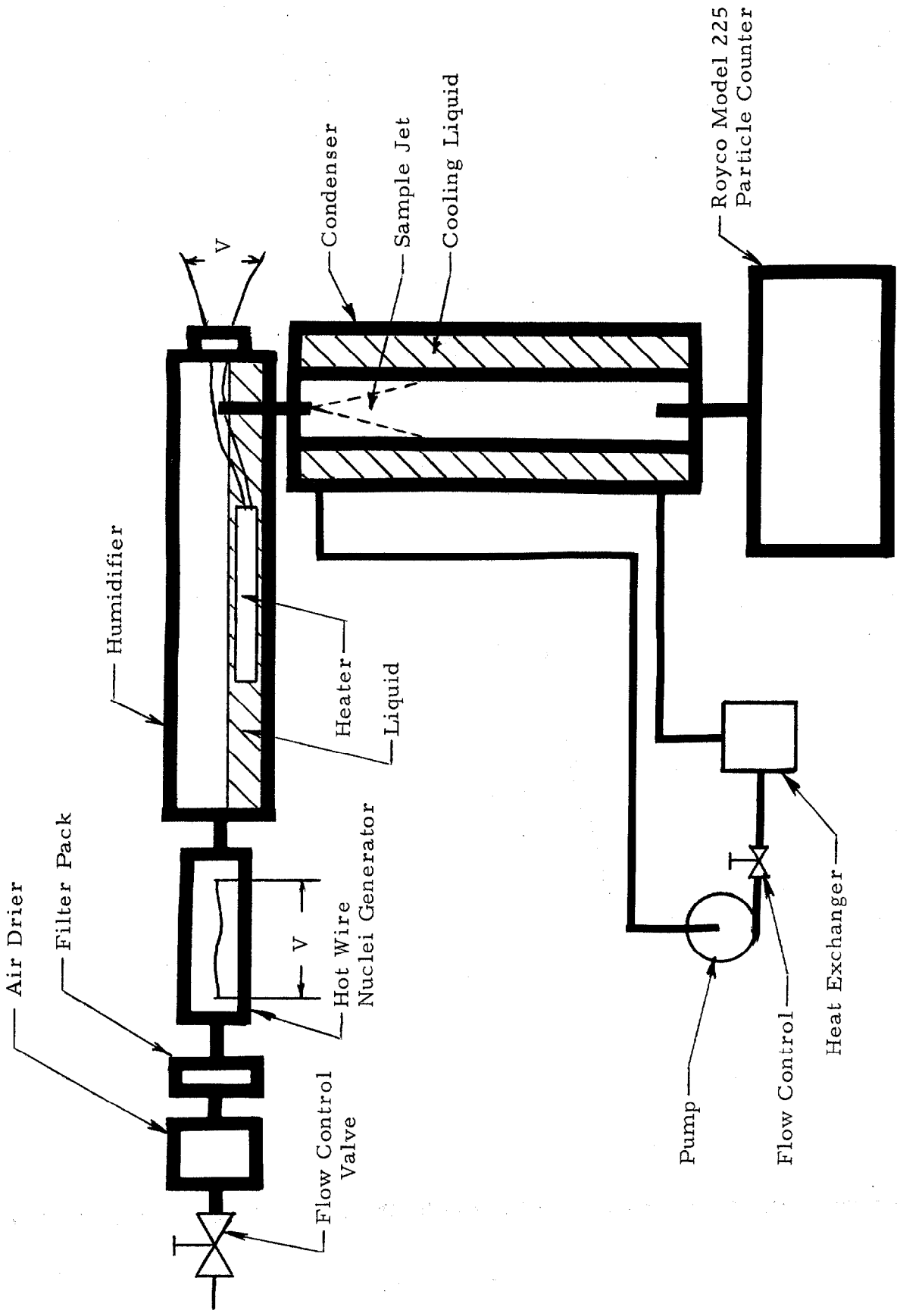

FIGURE 1 - CNC Schematic

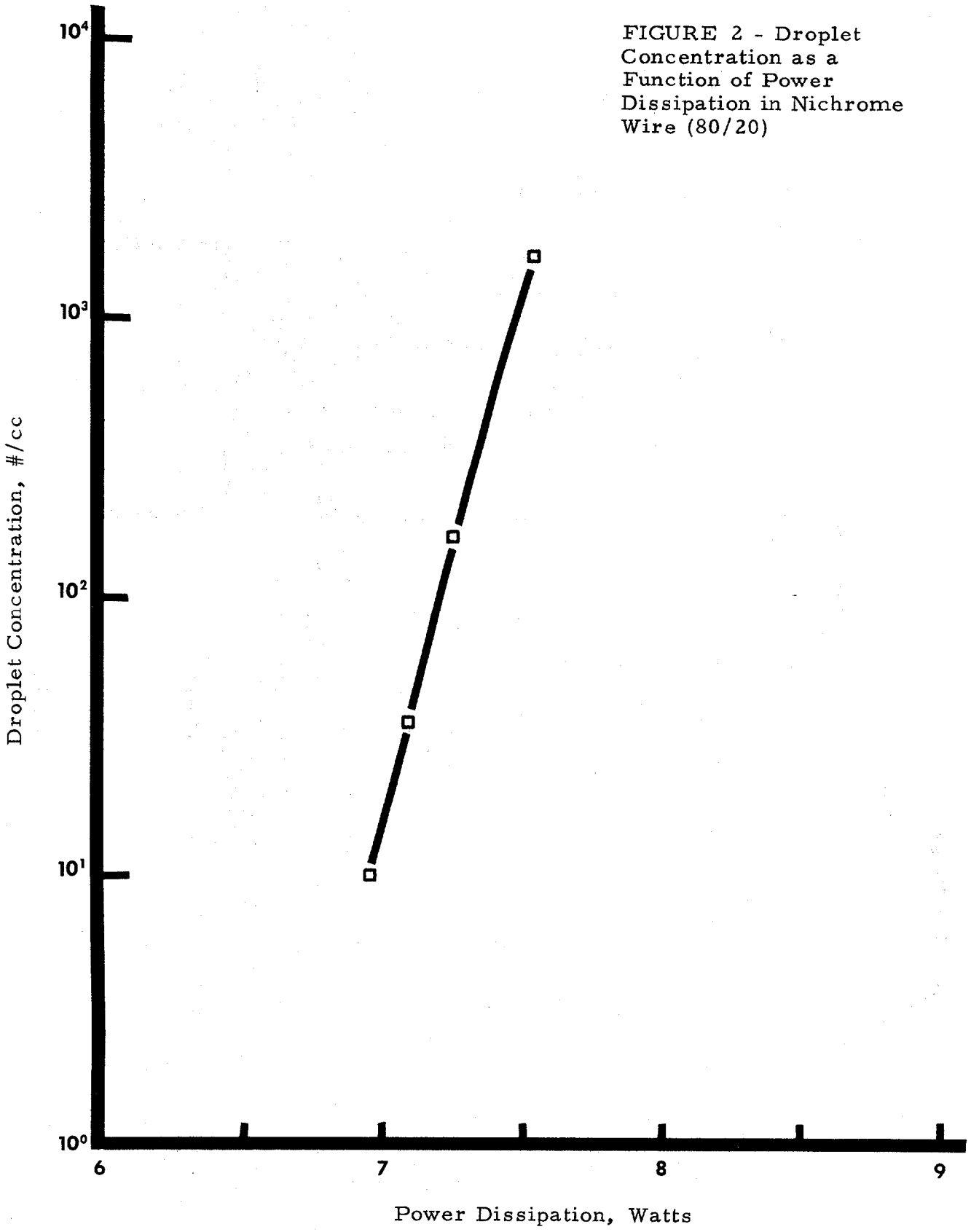

FIGURE 2 - Droplet Concentration as a Function of Power Dissipation in Nichrome Wire (80/20)

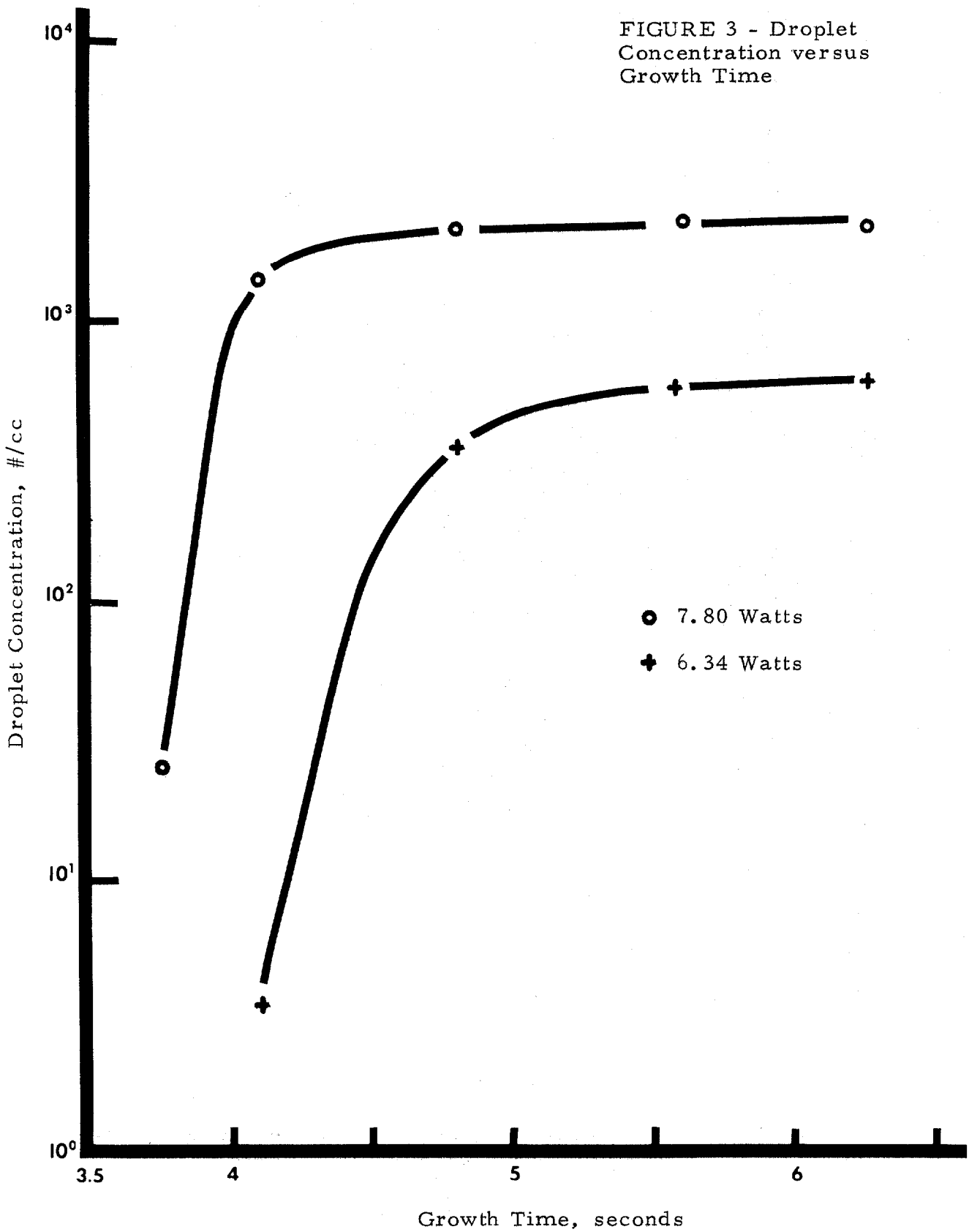
FIGURE 3 - Droplet Concentration versus Growth Time
10^4
10^3
10^2
10^1
10^0
Droplet Concentration, #/cc
3.5
4
5
6
Growth Time, seconds
7.80 Watts
6.34 Watts

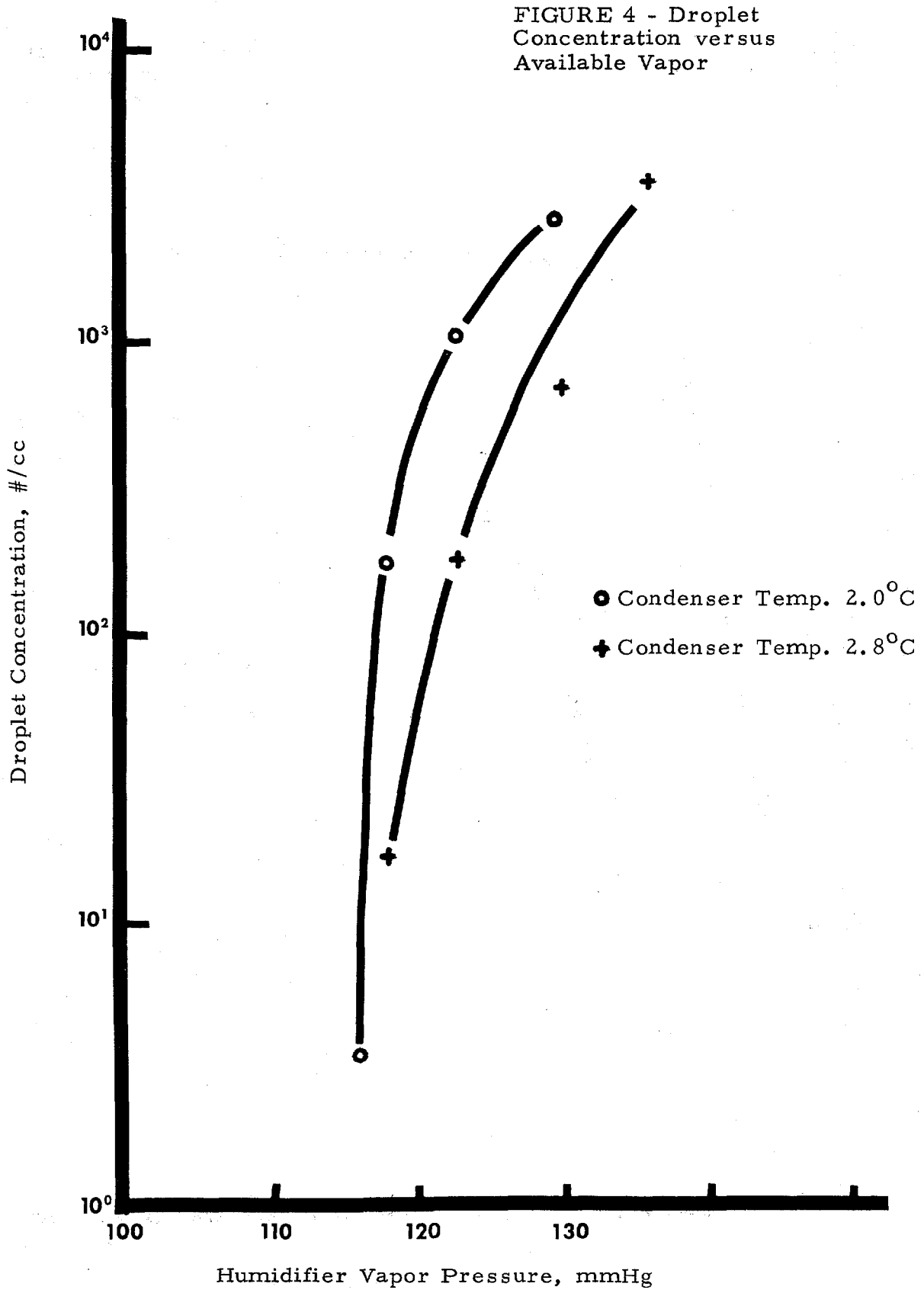
FIGURE 4 - Droplet Concentration versus Available Vapor
Droplet Concentration, #/cc
10^4
10^3
10^2
10^1
10^0
100
110
120
130
Humidifier Vapor Pressure, mmHg
Condenser Temp. 2.0°C
Condenser Temp. 2.8°C

TABLE I

Droplet Size Distribution

Droplet Size (microns)	Droplet Concentration (#/cc)
0.5 - 0.7	14
0.7 - 1.4	11
1.4 - 3.0	53
3.0 - 5.0	14
> 5.0	35

Flow Rate = 1 liter/minute

DISCUSSION

MURROW: Is there use for this unit for sampling atmospheric air? I didn't see where outside air enters the system.

LIEBERMAN: Yes, the device can be used for sampling outside air. In the first slide I showed, compressed air was used to pass sample air through seven membrane filters to remove all nuclei. Following that, there was a nuclei source. Had the compressed air line and the filter bank been omitted, we could have drawn in a sample directly from atmospheric air.

ANDERSON, W L: Since the concentration of outside air is often 10,000 or more condensation nuclei per cc, and it's my understanding that the saturation limit of the 225 Model is of the order of 100 particles per cc, how, then, can you follow or monitor air quantitatively with your device?

LIEBERMAN: At concentrations greater than 1000 per cc it's necessary to add dilution air to the system. The Model 225 normally samples at 285 cc per minute. It's possible to cut down the sampling rate to approximately one-tenth of that. Beyond that, we must add dilution air.

ETTINGER: Did you look into the variation in size distribution as a function of the growth time? What I'm thinking about is, whether this can be used as an aerosol generator of sorts?

LIEBERMAN: Yes, we did look into the size variation. After the initial growth, we had a typical log-probability distribution when there was a fairly high concentration of very small droplets and a much smaller concentration of larger ones. The size distribution which I showed, existed at the end of the growth time.

ETTINGER: Do you think it ever can get to the point where the size is almost monodisperse?

LIEBERMAN: I doubt that it could unless all the nuclei had equal activation levels, or activatibility.

MONITORING AEROSOL CONCENTRATIONS WITH PIEZOELECTRIC CRYSTALS

David L. Brenchley
Environmental Engineering Laboratory
Purdue University
West Lafayette, Indiana

Timothy E. Carpenter
Ganett, Fleming, Corddry
and Carpenter, Inc.
Harrisburg, Pennsylvania

ABSTRACT

Piezoelectric crystals are an accurate method for measuring mass. Thus aerosols which are deposited on such a crystal can be quickly and accurately detected. This paper covers the theory and application of piezoelectric crystals for monitoring aerosol concentrations; it presents a current literature review in addition to the work performed by the authors.

A piezoelectric crystal will mechanically vibrate when placed in an oscillating field, as is the case when it is made part of an electrical driving circuit. If the electric field of the driving circuit oscillates at a frequency fairly close to the resonant frequency of the mechanical vibration of the crystal, it forces the entire circuit to oscillate at that frequency. The natural frequency of the crystal depends on the mass of the crystal and any material which is attached rigidly to its surface. This property leads to the possibility of using the crystal to monitor increments of mass added to its surface. The natural frequency of oscillation of the crystal decreases in direct proportion to the amount of added mass.

Presently there are two commercially available piezoelectric particle mass monitors. One uses an electrostatic precipitator type collector while the other uses a single stage inertial impactor. Both units have been tested for use in ambient and source monitoring of aerosols.

The authors have worked to adapt the piezoelectric crystal for use in conjunction with a cascade impactor. The result is a four-stage piezoelectric cascade impactor. The impactor design is similar to that of the Battelle impactor. The mass sensor system consists of one crystal at each stage and one reference crystal. The signals of the monitoring crystal and the reference crystal are mixed and the difference frequency obtained. In this way, ambient effects such as temperature changes were substracted out and only changes due to mass were detected. The results obtained from this study indicate that this type instrument can be used to accurately and quickly determine the particle size of ambient concentrations. With certain modifications, it might also be used for source monitoring.

INTRODUCTION

There are many occasions when it is desirable to be able to determine the concentration of an aerosol in a gas. The piezoelectric crystal microbalance has a demonstrated mass sensitivity, under optimum conditions, of 1 picogram (10^{-12} g). Thus with proper design and operating considerations this method has promise for many applications. The purpose of this paper is to review the theory and practice of using piezoelectric crystals to measure aerosol concentrations.

THEORY OF MICROBALANCE

Piezoelectricity

When certain types of crystals are put under a mechanical stress they respond by having electrical charges appear on certain faces of the crystal. Conversely a mechanical stress results when the crystal is subjected to external electrical fields at the crystal surface. This phenomenon is called piezoelectricity. It has been understood for many years and one of the best known applications is the quartz pressure transducers [1].

The usefulness of the piezoelectricity effect for mass measurements occurs when the crystal is made a part of an electrical oscillator circuit. The crystal will vibrate mechanically when placed in the oscillating electrical field. If the electric field oscillates at a frequency close to the mechanical resonant vibration frequency of the crystal, the crystal forces the circuit to oscillate at precisely the resonant frequency. It is this important effect which allows the piezoelectric crystal to be used as a mass monitor. When a small quantity of foreign material is deposited on the surface of a crystal, this causes the natural resonant frequency of the crystal to decrease. As shown in Figure 1 there are several different vibrational modes which can be used. These include the thickness - shear mode, length - longitudinal mode, face - shear mode, and flexural mode. In all except the flexural mode the frequency of vibration is expressed

$$f = \frac{N}{L} \tag{1}$$

where:

f = the frequency of vibration

N = the constant for fundamental mode, and

L = characteristic dimension for vibration

In piezoelectric microbalances quartz crystals are used and they are operated in the thickness - shear mode. Thus the characteristic dimension for vibration is the crystal thickness and it is this parameter which is changed when a layer of particulate matter is deposited on the surface. Since frequency can be measured so precisely, the resulting decrease in resonant frequency of the crystal allows a corresponding precise mass measurement.

The fact that an oscillating quartz crystal may be used to detect a change in mass has been known almost as long as quartz crystal oscillates have been in use. For example, in early radio days it was common practice to lower the transmitter frequency by marking the surface of the controlling quartz plate with a pencil, thus adding an adhering mass of graphite [3].

Thin Film Theory

The application of the piezoelectric microbalance stems from the consideration of the deposited foreign material as a thin film. The theory was originally presented by Sauerbrey[4] in conjunction with metal film evaporation and later confirmed by Olin and Sem[5] for particle deposition on a crystal.

The thickness of a crystal may be expressed as

Thickness-Shear Mode

$$f = \frac{N}{L}$$

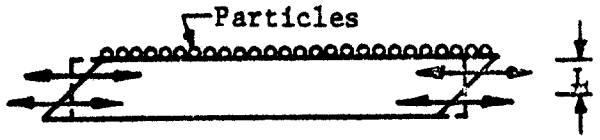

Length-Longitudinal Mode

$$f = \frac{N}{L}$$

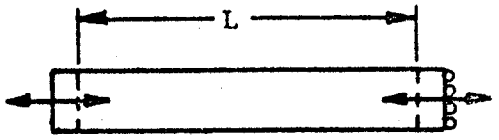

Face-Shear Mode

$$f = \frac{N}{L}$$

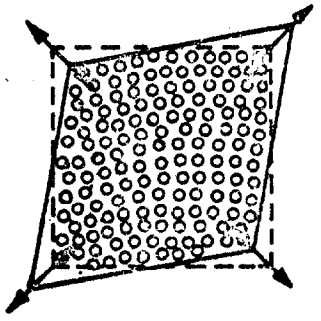

Thickness = L

Flexural Mode

$$f = \frac{N\ t}{L^2}$$

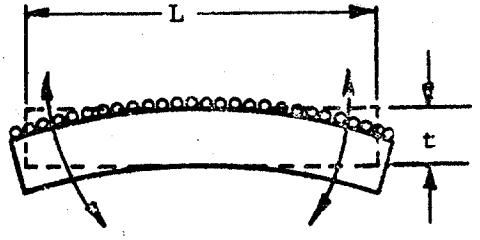

f = Frequency of vibration

N = Frequency constant for fundamental mode

L = Characteristic dimension for vibration

Figure 1
Vibration Modes of Piezoelectric Crystals (after reference 2)

$$L = \frac{M_q}{A\,\rho_q} \tag{2}$$

where:

M_q = the mass of the electrically-driven portion of the crystal

A = the area of the electrically-driven portion of the crystal

ρ_q = the mass density of the crystal

Differentiating equation (1), we obtain

$$\frac{\Delta f}{f} = -\frac{\Delta L}{L} \tag{3}$$

where Δf is the change in resonant frequency caused by a change in the thickness ΔL of the crystal. Differentiating equation (2) and substituting into equation (3) we obtain

$$\frac{\Delta f}{f} = \frac{\Delta M_q}{\rho_q A\,L} = -\frac{\Delta M_q}{M_q} \tag{4}$$

At this point an assumption is made that the frequency shift caused by the change in mass, ΔM_q, will also be caused by an identical foreign mass, ΔM, deposited on the surface. This then also implies that the foreign particles strictly adhere to the crystal surface. This necessarily means that the layer must be very thin.

Under the thin film condition the foreign material has a negligible contribution to the elastic properties of the crystal. For thick layers a composite resonator exists and the collected foreign material is also strained and the thin film theory no longer applies. Then, the frequency change is also a function of the elastic properties of the collected material. When this occurs the observed frequency change will be less than that predicted by thin film theory. In general, a layer will act as a thin film if the deposited layer is less than 1% of the crystal thickness(5). The assumptions of thin film theory allow equation (4) to become

$$\frac{\Delta f}{f_o} = -\frac{\Delta M}{M_{q_o}} \tag{5}$$

where subscript "o" refers to the initial condition before any foreign mass is added. This equation indicates that the resonant frequency decreases linearly with the addition of foreign mass. In practice it has been found that the deviation from linearity is less than 1% as long as Δf is less than 1/2% of f_o. Substituting equation (1) into equation (5) and rearranging we obtain

$$\frac{\Delta f}{\Delta M} = -\frac{C_f}{A} \tag{6}$$

where C_f is a constant for a specific type crystal and is defined

$$C_f = \frac{f_o^2}{\rho_q N} \tag{7}$$

Equations (6) and (7) indicate that crystals which have higher resonant frequencies, f_o, will have correspondingly higher mass sensitivities. However, as will be discussed later, there is an upper limit to this because at higher frequencies particle re-entrainment becomes more of a problem.

Material Requirements

The piezoelectric crystals must possess several important characteristics in order to successfully be used as part of a microbalance. These are namely mechanical and chemical in nature. First of all, the crystal must have a low internal friction and second, the material must be essentially inert to its environment. This latter factor is critical because a surface chemical reaction of the crystal could cause its weight to increase or decrease. It would be impossible to separate this weight change from that collected on the surface.

With the foregoing consideration in mind, quartz is a material which best meets these requirements. Also, it has a very high frequency stability; i.e. 1 part in 10^9. Thus at present all piezoelectric microbalances use some sort of quartz crystal. The properties of the crystal vary somewhat depending how it is cut. Figure 2 shows the various types of quartz crystals. Of these, the AT cut crystal finds the greatest use for aerosol monitoring. It is a high frequency cut which possesses a low temperature coefficient. This latter property is desirable since we want frequency change to occur only as a function of collected mass. When the material properties associated with the AT cut quartz crystal are applied to equation (7), then we obtain

$$C_f = 2.27\, f_o^2 \tag{8}$$

ρ_q is 2.654 g cm^{-3},

N is 0.166 MH_z - cm, and thus,

C_f is in $\frac{H_z - cm^2}{\mu g}$ and

f_o is in MH_z

PRINCIPLE OF OPERATION

Components

The basic components of a piezoelectric microbalance aerosol detector are the collection method, the crystal and the detection electronics. The aerosol must be collected or deposited efficiently on the crystal surface. The crystals should have the properties previously discussed and the electronic detection system is composed of the oscillation circuits, a mixer, and digital read-out apparatus for the frequency. The approach is to optimize the unit by designing for the most efficient removal mechanism, selecting a crystal with a sufficiently high mass sensitivity and then operating the device such that the frequency change caused by all other factors

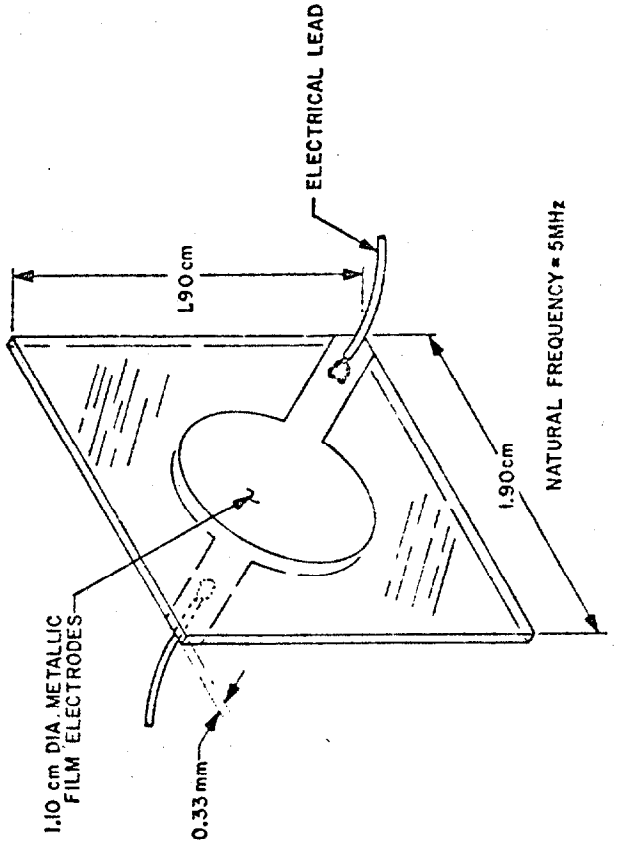

Figure 3
Plate-Type Quartz Crystal (after reference 5)

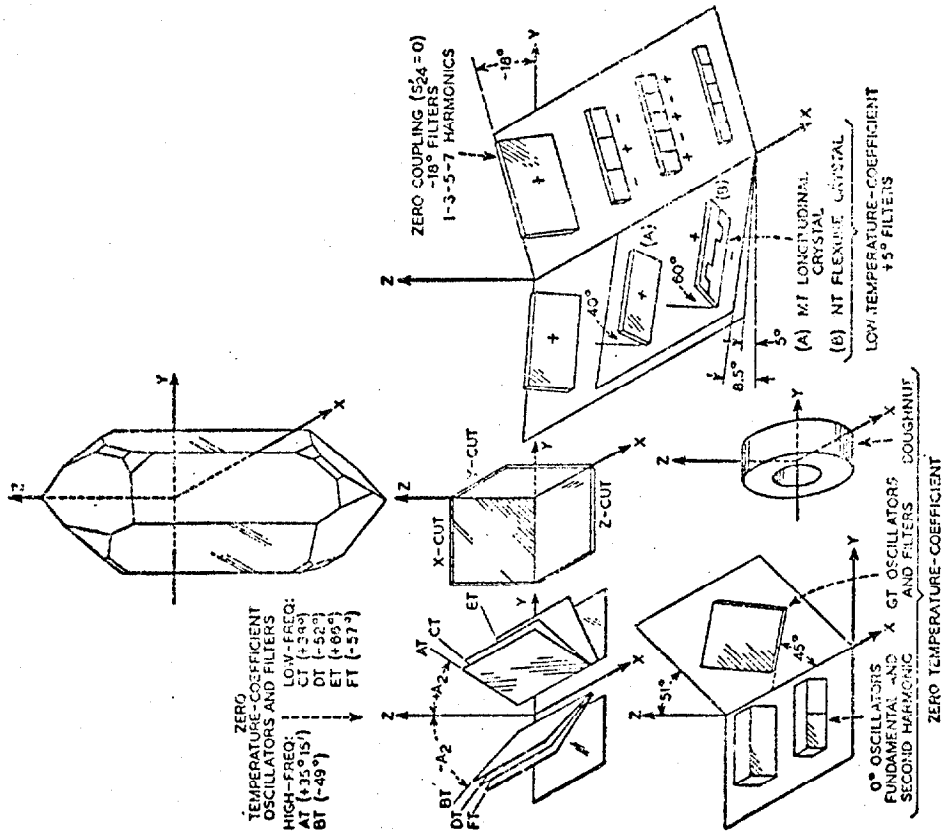

Figure 2
The Cuts of Quartz (after reference 6)

is negligible compared to that caused by the collected mass.

Crystal Characteristics

The quartz crystals take the shape of flat plates or circular wafers. As shown in Figure 3 they are quite small and have an electrode on each side. The electrodes are gold, silver, nickel or aluminum and are deposited by vacuum evaporation techniques. Only that portion of the crystal which is covered by the electrode is sensitive to collected mass. This is true because the amplitude of vibration dampens very rapidly outside the electrode area. The crystal becomes a part of the electrical circuit by attaching leads or clips to each side. While in operation the results of the mass measurements are not affected by normal mechanical shock or vibration. In addition, the crystal will function equally well in any mounted position.

Particle Collection

The aerosol may be deposited upon the crystal surface by the following mechanisms: inertial impaction, electrostatic precipitation, thermal precipitation, centrifugal separation and gravity. Of these, the first two mechanisms are most commonly used. Figure 4 shows the side view of devices used to collect the aerosol. In one case the sample stream enters through a jet and the particles impinge on the crystal surface. In the other device the crystal is actually the collecting electrode of an electrostatic precipitator. The needle valve is the discharge electrode and is located in the incoming gas stream. The particles thus become charged and are then attracted to the crystal surface. The important point here is that the aerosol should be completely collected or else the exact collection efficiency of the device must be known. In most cases it is necessary to know the collection efficiency as a function of particle size.

Particle Adhesion

Once the particle has been effectively removed from the gas stream it remains on the surface due to adhesion forces. Inertial forces tend to re-entrain the particle due to the crystal vibration. These forces are represented as follows[5]:

$$F_a \alpha D_p \tag{9}$$

$$F_i \alpha D_p^3 f_o^2 \tag{10}$$

where:

F_a = the force causing the particle to adhere to the crystal surface

F_i = the force tending to re-entrain the particle

D_p = the particle diameter

f_o = the resonant frequency of the crystal

Equations (9) and (10) thus indicate that the larger particles will tend to be re-entrained but this can be alleviated somewhat by using crystals with lower resonant frequencies, f_o. However, as indicated in equations (6) and (7) this will result in a lower mass sensitivity of the system.

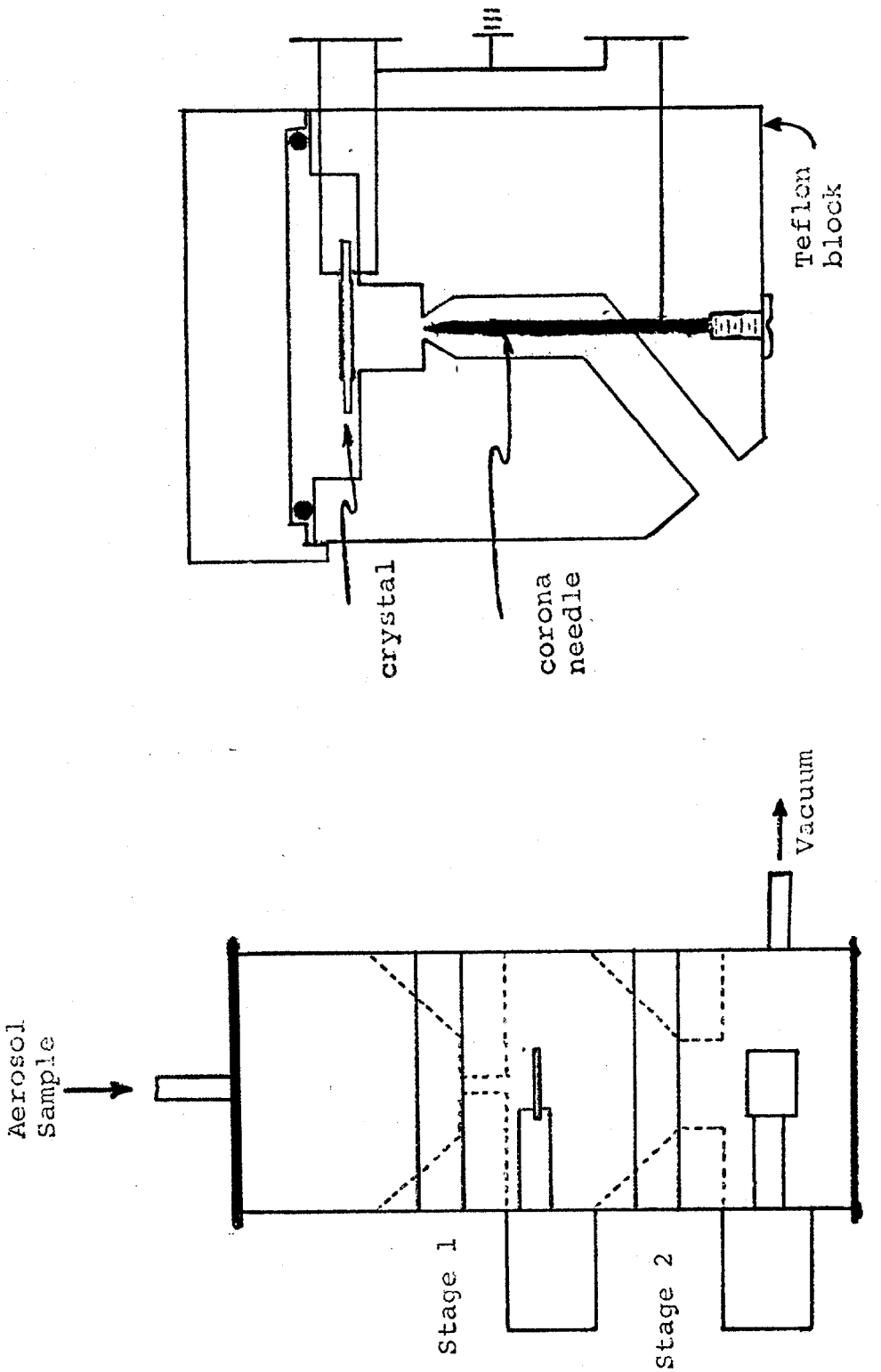

Figure 4
Devices for Collecting Aerosols on Crystal Surfaces (after reference 7)

The particle collection and containment process can be enhanced by conditioning the aerosol and/or altering the crystal surface. Certain gas phase constituents such as water vapor, ammonia and sulfur dioxide, can be used to enhance the particle collection and adhesion characteristics. Also a thin coating of adhesive material such as grease can be applied to the crystal. These methods may help to decrease particle re-entrainment but they raise other uncertainties which must be considered. Care must be taken not to overload the crystal with the coating and hence cause it to be in a non-linear response regime. Also, the gas conditioning agents which are added are undoubtedly adsorbed onto the aerosol and will therefore be measured along with the collected aerosol. The coating put onto the crystal may also off-gas or adsorb gases which may then cause error. These problems can only be handled by using careful calibration procedures.

The piezoelectric crystals must have their surfaces cleaned periodically. This requirement stems from the thin film theory and the possibility of deviating from linearity. The crystals otherwise simply become overloaded. The cleaning is accomplished by using a piece of tissue paper possibly in conjunction with a washing solution. It is not necessary to clean it up such that the original resonant frequency is obtained; this is because the next mass measurement is based upon frequency change and thus it is okay if some residual mass is still present.

Electronics System

The piezoelectric microbalance may consist of one or two crystals. If one crystal is used then a high frequency counter capability is a necessity. This simply stems from the fact that the resonant frequencies of the clean crystals are usually 5 MH_z or 10 MH_z. This problem can be avoided if two crystals are used. One is a "reference" crystal, while the second one collects the aerosol material. The outputs of these two oscillator circuits are fed into a mixer which basically substracts the two signals and has this as its output. The reference crystal then hopefully accounts for any changes in frequency due to environmental factors other than added mass.

The details of the various electronic circuits can not be presented here. However, they have been quite adequately described in references (2) and (7).

Operating Conditions

The operating conditions of a microbalance must be known and held constant. As mentioned previously the crystals are sensitive to temperature. This variable can be controlled by proper selection of crystal cut and maintaining the conditions such that the temperature coefficient is low. For example, the AT cut quartz crystal exhibits a frequency deviation of less than 0.001% in the 20°C to 60°C range. This change is therefore negligible compared to that caused by the addition of the micrograms of material.

Some care must also be taken with regard to pressure. The gas pressure may affect crystal response due to stressing and gas adsorption - desorption processes. Olin and Sem (8) performed tests and indicated a 12 Hz change for a static pressure change of 25 cm of Hg. This should not be a serious source of error but it is a good idea to make all frequency readings at the same pressure if possible.

Aerosol Concentration

The concentration, C, of an aerosol in a gas stream can be calculated from the following expression

$$C = \frac{\Delta f}{\Delta t} \quad \frac{1}{S\ Q\ E_c\ E_w} \tag{11}$$

where:

C = the concentration in $\mu g\ m^{-3}$

Δf = the change in frequency, Hz

Δt = the sampling time, sec

Q = the sample flow rate, $m^3\ sec^{-1}$

S = the theoretical mass sensitivity of the crystal, Hz μg^{-1} (from equation 6)

E_c = the efficiency of particle collection by the collector

E_w = the efficiency of the piezoelectric microbalance in weighing the deposited particles

In this expression Δf, Δt, and Q are quite easily measured. The theoretical mass sensitivity is calculated based upon the known characteristics of the crystal. The efficiencies, E_c and E_w, are not known usually, without performing calibration tests. The collection efficiency for a given device may be estimated from theory based upon design and operating conditions. The electrostatic precipitator will usually have a higher collection efficiency than the inertial impactor. The E_w term will most likely be close to a value of 1.0 if the thin film theory conditions are met. It should be pointed out here that both E_c and E_w are dependent upon the particle size.

Particle Sizing

The piezoelectric microbalance has some capability for determining aerosol size distributions. There are two approaches available. One is the method of Carpenter[7] in which several crystals were used in conjunction with a multiple stage cascade impactor that separated the aerosol into various size ranges. The second approach uses a single crystal and follows the method described by Chaun[9]. The gas sample must be diluted such that no two particles are collected at the same instant. Thus a change of frequency over a short period of time can be attributed to a single particle and then if it is assumed to be spherical with a constant and known density its size can be calculated. All of this can be automated if the digital output of the frequency counter is converted to analog and then differentiated. Additional electronics must be used to count the number of frequencies associated with each size category. For a material with a density of 2 g cm^{-3} then particles as small as 0.5 microns can be detected.

Calibration

If the design and operation of the microbalance meets the theoretical assumptions, then no calibration is necessary. The response is linear and predictable. If the layer becomes thick and/or the collected material is dissipative then the method can still be used, but a laboratory calibration is necessary. This means that the method can actually be extended to the detection of liquids and gases, but calibration is then a necessity.

DESCRIPTION OF EQUIPMENT

There have been a number of piezoelectric mass monitors constructed and some of them are available commercially. Most of them have been designed for a specific application.

Thin Film Monitors

Wolsky[3] has provided a detailed description of various commercial microbalances which have been developed to measure metallic film thickness. These devices are used to control the rate by which metal vapors are vacuum deposited on components. The principle of operation follow directly from the theory of Sauerbrey[4].

Thermo-Systems Unit

Thermo-Systems, Inc. of St. Paul, Minnesota has developed a line of instruments designed for monitoring aerosol concentrations under ambient conditions and from emission sources. These instruments are single stage collectors using the electrostatic precipitator design. The precipitator operates at 5000 vdc. The 5 MHz quartz crystals are housed in a Teflon R chamber and they have a mass sensitivity of 180 Hz μg^{-1}. A "monitoring" and a "reference" crystal are used. The sample flow rate through the instrument is 1 LPM. Applying this data and assuming E_c and E_w to be unity to equation (11), we obtain the manufacturer's expression for aerosol concentration

$$C = 333 \frac{\Delta f}{\Delta t} \tag{12}$$

The particle mass monitors are designed to collect particles in the 0.01 to 20 micron range. The maximum amount of material which can be collected before the crystal must be cleaned is 40 micrograms. This in conjunction with the 1 LPM sample flow rate and aerosol concentration of 1 to 200,000 $\mu g\ m^{-3}$ means that the crystals must be cleaned every several hours. Of course the very low concentrations would allow the crystals to be used a couple days before cleaning.

Celesco Unit

Celesco Industries of Costa Mesa, California has developed a single stage impactor which uses 10 MHz crystals and has a mass sensitivity of 1000 Hz μg^{-1}. A two crystal circuit is used with the second one being a reference crystal. The collection efficiency of the "monitoring" crystal is increased by placing a thin 10^{-7} cm layer of adhesive on the surface. The instrument is designed to collect particles in the 0.1 to 100 microns size range and can be used for aerosol concentrations of 10 $\mu g\ m^{-3}$. The sample flow rate used is 0.15 LPM.

Purdue Unit

Carpenter[7] built a four stage cascade impactor after the design of Mitchell and Pilcher [10] and equipped each stage with 10 MHz crystals. A dual crystal oscillator circuit was employed with one "reference" crystal and then a "monitoring" crystal located at each stage. A single mixer and digital read-out unit was used. A switch was used to monitor each stage separately.

The impactor operated at a flow rate of 0.5 LPM and for an aerosol with density of 1 g cm^{-3} had stage constants of 18.9, 12.6, 6.3, and 2.5 microns respectively for the four stages. This unit was calibrated using a uranine dye aerosol and then

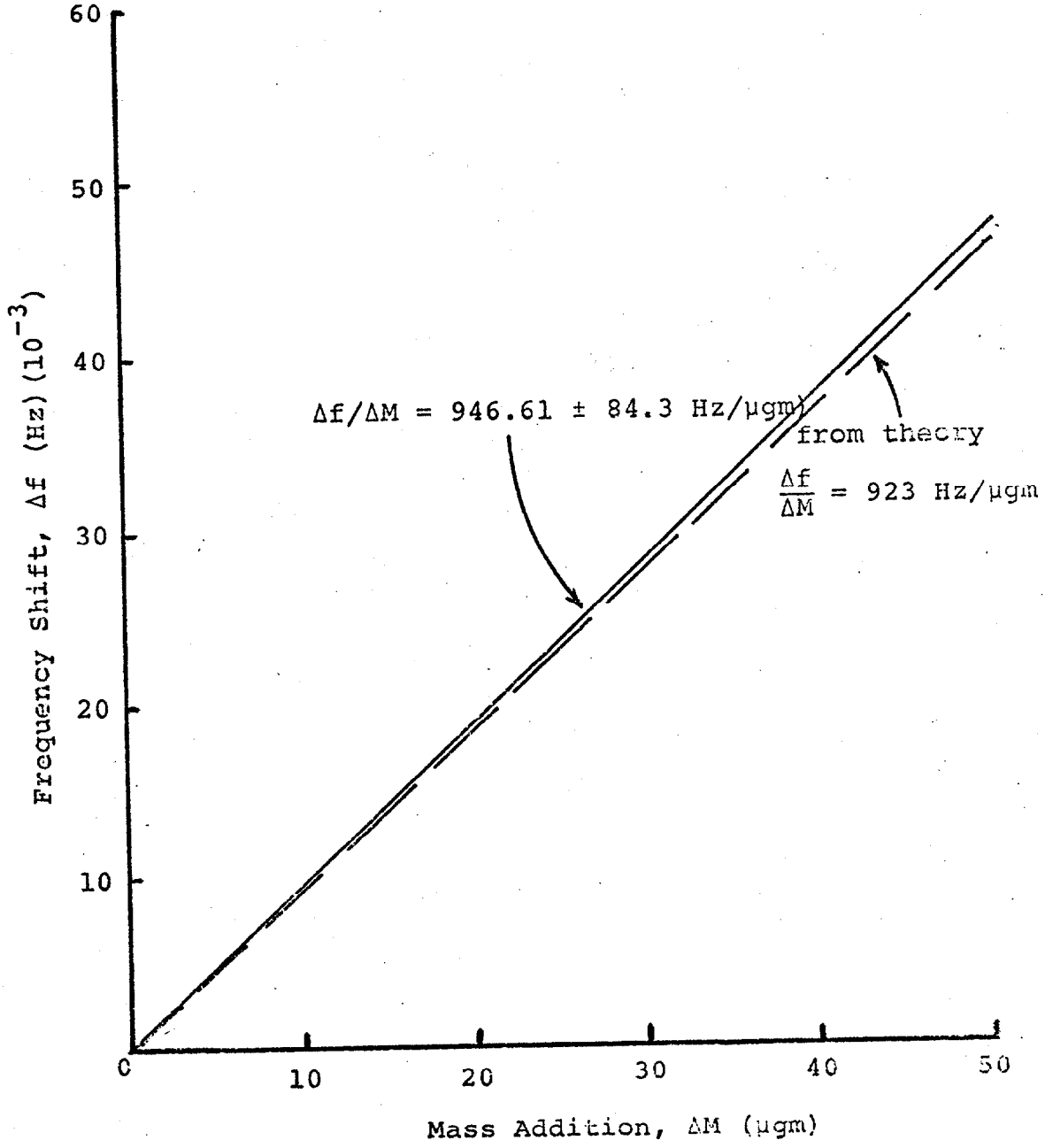

Figure 5
Calibration of Piezoelectric Cascade Impactor
(after reference 7)

analyzed by a simple fluorescence analysis using a spectrophotometer. Figure 5 shows the results of the calibration tests for the jet which had a stage constant of 6.3 microns. Note that the calibration line agrees quite well with the calculated theoretical mass sensitivity of 923 Hz μg^{-3}. This was not the case for the other stages, however, as particle deposition became a problem. At the top two stages particles were collected over an area greater than that covered by the electrodes thus causing the observed mass sensitivity to be lower than theoretical. On the fourth stage the aerosol was not being uniformly distributed over the crystal surface. Although still in a linear response regime, the observed mass sensitivity was greater than theoretical. This situation is explained by re-examining equation (6) and realizing that "A" was effectively being decreased due to the smaller jets at the lower stages. In stage 3 the jet size and the electrode area were essentially the same. All this does not pose a problem as long as the unit is properly calibrated.

APPLICATIONS

The piezoelectric microbalance has found applications for aerosol monitoring in ambient air and various sources. These applications have met with varying degrees of success.

Ambient Monitoring

Both the Thermo-Systems and Celesco units have been successfully used to monitor aerosols in the ambient air [11],[12]. Figure 6 shows the comparison of the piezoelectric device with a filtration method; this indicates a good correlation yet it provides the measurement in much less time. Chuan [11] reports that ambient aerosol concentrations were successfully measured with an airborne instrument; in a test in Los Angeles, concentrations ranged from 197 $\mu g\ m^{-3}$ in the wake of a jet aircraft taking off to 2 $\mu g\ m^{-3}$ at an altitude of 5000 feet.

Source Testing

The microbalance instruments have been applied to source testing of automobiles and powerplants with some success. The major problems in this type of application are the high aerosol concentrations and the presence of interfering substances such as high water vapor content. Herling[14] has reported tests on automobile exhaust and indicated a $\pm$ 30% deviation from filtration measurements. Herling attributes this variation to the presence of organics and water vapor. Sem [15] has outlined a method for using the piezoelectric crystal to monitor particulate matter from powerplant stacks. This system is shown in Figure 7. Notice that the sampling process must be done twice. First the sampling rate from the stack must be sufficient to provide an adequate sample. Second, the sample must be split because the particle mass monitor can accomodate only a small flow rate. The sample conditioning which usually consists of heating or dilution is needed to prevent condensation on the piezoelectric crystal. A detailed review of considerations for source monitoring has been presented by Olin[16].

EVALUATION

The piezoelectric microbalance shows promise for many types of applications for aerosol monitoring. It is particularly effective for ambient and work conditions where the temperature and water vapor problem is negligible. The application for monitoring source concentrations of aerosols seems presently open to question. The eventual success of such an application hinges on the characteristics of the gas stream and the aerosol. The final evaluation of this method for a particular

application stems from a consideration of the advantages and disadvantages; these are presented in Table 1. Basically the application of the piezoelectric microbalance for aerosol monitoring is in its infancy and many of its present problems will be worked out in the future.

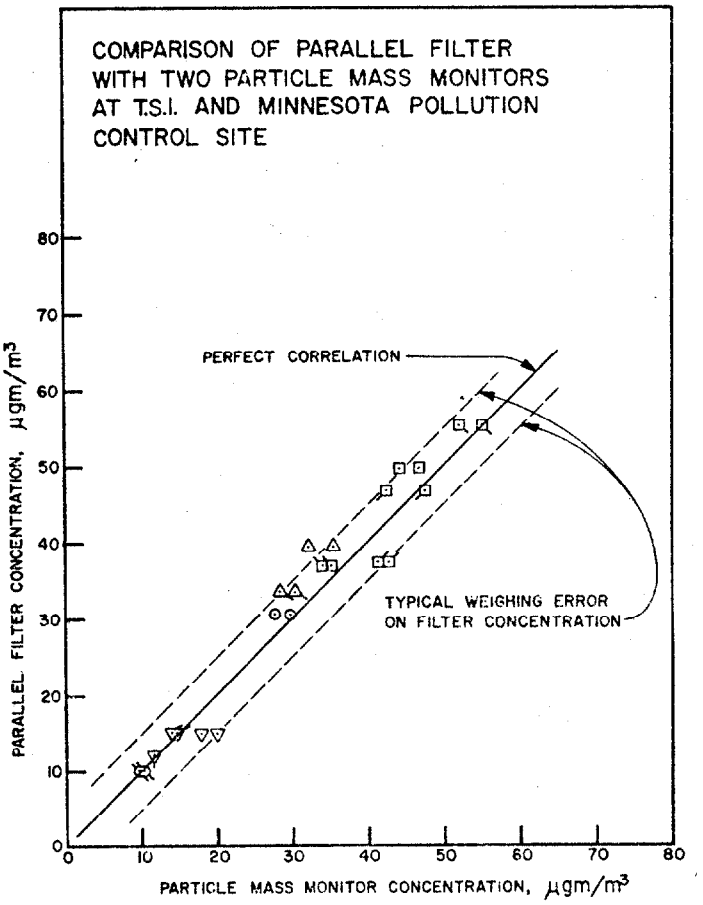

Figure 6
Comparison Between Piezoelectric Microbalance and Parallel Filter (after reference 13)

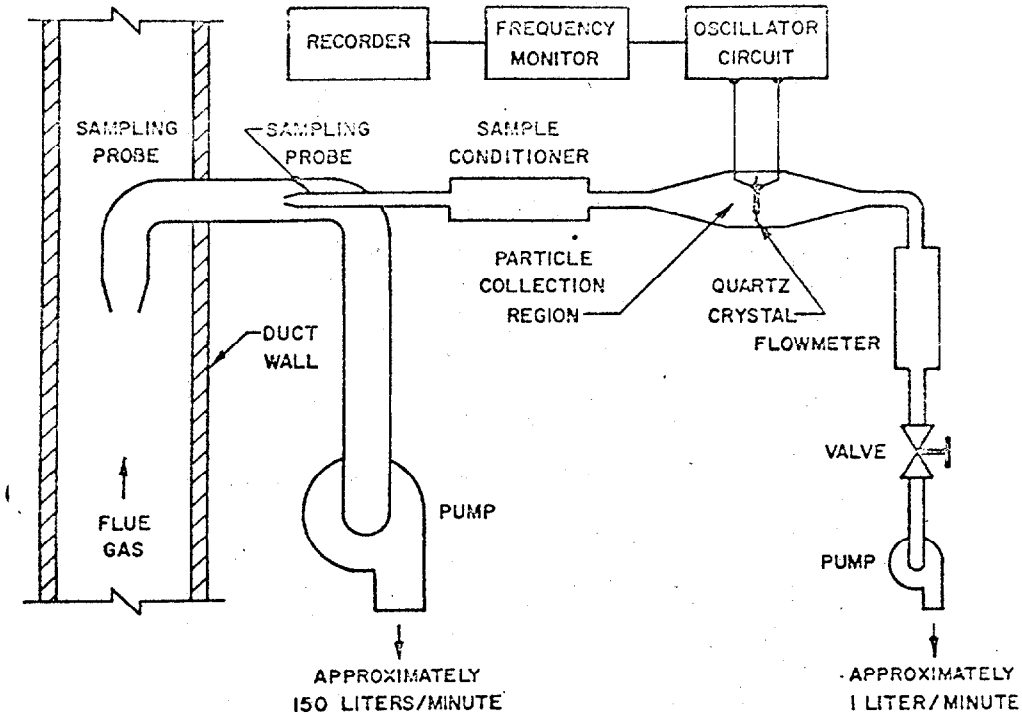

Figure 7
Stack Sampling System Using a Piezoelectric Microbalance Sensor (after reference 15)

Table 1 - Advantages and Disadvantages of the Piezoelectric Microbalance for Monitoring Aerosols

Advantages

1. very high mass sensitivity
2. linear response
3. light weight and portable
4. fast response
5. response unaffected by shock or vibration
6. moderate cost
7. can provide total mass or size distribution data

Disadvantages

1. crystals are not cleaned automatically and hence requires attention
2. particle re-entrainment may be a problem
3. volatile components are lost
4. condensation may be a problem
5. temperature limitations
6. difficulty getting even particle distribution on crystals
7. response may be affected by gaseous constituents also.

REFERENCES

(1) Obert, Edward F., Internal Combustion Engines: Analysis and Practice pg 134 International Textbook Company 1950 Scranton, Penn.

(2) Sem, G.J., et.al. "State of the Art: 1971 Instrumentation for Measurement of Particulate Emissions from Combustion Sources" April 1971 NTIS Report PB 202 666 NTIS Springfield, Va.

(3) Wolsky, S.P. and Zdanuk, E.J., (editors) Ultra Micro Weight Determination in Controlled Environments

(4) Sauerbrey, G.Z., "Verwedung von Schwinquarzen Sur Wagung dunner Schichten und zur Mickro-wagung", Ziets. Phys 155, 206 (1959)

(5) Olin, J.G. and Sem, G.J., "Piezoelectric Microbalance for Monitoring the Mass Concontration of Suspended Particles" Atmospheric Environment Vol. 5, 653 (1971)

(6) Mason, W.P., Prezoelectric Crystals and Their Applications to Ultrasonics Van Nostrand, New York, pg 83 (1950)

(7) Carpenter, T.E., "The Design, Construction and Calibration of a Piezoelectric - Cascade Impactor for Monitoring Aerosols", M.S. Thesis School of Civil Engineering, Purdue University (1972)

(8) Olin, J.G. and Sem, G.J., "Piezoelectric Aerosol Mass Concentration Monitoring ", Advances in Instrumentation for Air Pollution Control, Symposium, Cinn., Ohio, (May 1969)

(9) Chuan, Raymond L., "An Instrument for the Direct Measurement of Particulate Mass", Aerosol Science Vol. 1 111 (1970)

(10) Mitchell, R.I. and Pilcher, J.M., "Improved Cascade Impactor for Measuring Aerosol Particle Size" Ind. and Eng. Chem., 51, 1039 (1959)

(11) Chuan, R.L., "Measurement of Particulate Pollutants in the Atmosphere", Joint Conference on Sensing of Environmental Pollutants, Palo Alto, Calif. 1971, AIAA Paper No. 71-1099

(12) Olin, J.G., "Airborne Particle Monitoring Applications of the Particle Mass Monitor System", Joint Conference on Sensing of Environmental Pollutants Palo Alto, Calif. 1971, AIAA Paper No. 71-1100

(13) "Air Quality Monitoring Experiments with Particle Mass Monitor System", Technical Note No. 6 Thermo-Systems Inc. St. Paul, Minn.

(14) Herling, R., "A Comparison of Automotive Particle Mass Emission Measurement Techniques", Central States Meeting of the Combustion Institute, Ann Arbor,

(15) Sem, G.J., Borgos, J.A. and Olin, J.G., "Monitoring Particulate Emissions", Chem. Engr. Prog. Vol. 67 No. 10 (1971)

(16) Olin, J.G., "State of the Art: 1971 Instrumentation for Measurement of Particulate Emissions from Combustion Sources", NTIS Report PB 202 666 Springfield, Va. (1971)

DISCUSSION

MESERVEY: Can you tell me something about the magnitude of the oscillation, i.e., amplitude of the movement, of the crystal in comparison with the diameter of the particles which stick to it?

BRENCHLEY: Maybe I have to answer this a bit backward, since I don't have that number right in mind. The major size limitation that comes about because of the effect of crystal amplitude on size retention is about 20μm with a 10 megaherz crystal. Particles above that are reentrained and thus, we have problems collecting them. In other words, energy is imparted to them, and off they go again. I know that doesn't answer your question on a two-number basis, but I don't have that exact number.

CRAIG: Doesn't your calibration change continuously from "something" to "something" as you collect successive samples on the same crystal? Or do you clean it in between? What is the procedure?

BRENCHLEY: You wipe the deposit off with tissue paper. The two systems that are now available operate intermittently. The crystal must be cleaned at least every two or three hours and, if the concentration is high, as in a source situation, more often than that. For long-term, continuous sampling, some sort of continuous cleaning method would have to be used. For the system that uses an adhesive coating on the crystal to retain particles, the coating must be washed off and another coating reapplied.

MONITORS FOR ALPHA AND BETA ACTIVITY IN AIR EXHAUST DUCTS AND STACKS*

R. A. Moyer and G. Hayes

Savannah River Laboratory
E. I. du Pont de Nemours and Co.
Aiken, South Carolina 29801

Abstract

At the Savannah River Laboratory, exhausts from a variety of containment facilities discharge into five main stacks from which samples of air are passed through fiberglass filters mounted on charcoal canisters. Low-range and high-range monitor systems provide continuous surveillance of the accumulating radioactive deposits on the air sample assemblies and give prompt visible and audible warnings in the event ventilation filters fail or operating abnormalities release radionuclides from exhaust stacks.

The low-range system actuates a warning alarm at variable alarm set points. When the radiations from the deposit exceed the measurement range of the low-range system, a corresponding logarithmic high-range system detects the deposit. Alarms of the high-range system are actuated at an alert level and at a higher preset level which requires initiation of an emergency action plan. Wind speed and direction recorders are also mounted in the instrument consoles. The high-range system is designed to remain on scale for any credible accident.

Introduction

Large amounts of radionuclides, such as ^{60}Co, fission products, and transuranic elements, are routinely handled at the Savannah River Laboratory (SRL) in research and development programs. The total contents of glove boxes and containment boxes in shielded cells vary from 20,000 to 50,000 Ci of alpha emitters with approximately 700,000 Ci of ^{60}Co and lesser amounts of fission products. Formal safety analyses are written for operations involving large amounts of radionuclides and include a review of credible accidents and a determination of potential releases to on-site and off-site environs.

Exhausts from glove boxes, containment systems in cells, and cell support areas are passed through several stages of HEPA filters which are penetrometer-tested before the filters are placed in service. Exhausts in four main sections of the Laboratory discharge into five stacks. Air samples are collected from each contributory stream and each of the five stacks.

A low-range monitor is mounted above a fiberglass filter on a charcoal canister in a vacuum-tight sampler box and provides continuous surveillance of the accumulating deposit. This monitor, originally developed to provide early warning of airborne activity in occupied areas, was adapted to provide early detection and warning by alarms of HEPA filter breakthroughs or failures and other operational abnormalities causing releases from stacks. In most cases, the monitors are too sensitive

* The information contained in this article was developed during the course of work under Contract AT(07-2)-1 with the U. S. Atomic Energy Commission.

and of insufficient range to measure releases at the higher levels required in the event of an accident. A high-range system was recently designed and installed to measure releases beyond the range of the low-range monitors and to stay on scale for releases from any upper limit (maximum credible) accident.

Purpose of the Monitors

A primary purpose of the stack monitors is to provide an "action" alarm which will permit prompt notification of the area emergency coordinator when a stack release of radioactivity can potentially cause assimilation of radioactivity or contamination of personnel and facilities. The area emergency coordinator will immediately initiate protective action procedures to minimize the consequences of any abnormal stack release in the plant and laboratory facilities located close to SRL stacks. The main administration offices of the site are housed about 800 feet from the stacks. A fuel fabrication area, experimental reactors facilities, warehouses, and maintenance and service shops are located within 1000 to 4500 feet.

This monitoring system also provides two lower-level alarms ("concern" and "alert") which warn operating personnel and the facility emergency coordinator of an impending problem so that efforts can begin to curtail the release.

General Description of the System

Samples of stack air are passed continuously through three assemblies of fiberglass filter paper mounted on a Mine Safety Appliance #44135 charcoal cartridge in a common sampler box. The low-range and high-range detectors are mounted above or behind the deposits accumulating on the air sampling assemblies (Figure 1).

The signals from the detectors are transmitted to count rate meters or picoammeters which are coupled to recorders. When an alarm point is reached, a signal is sent to an annunciator which trips a visual and audible alarm. The system operates on scale to maximum release values predicted by safety analysis reports for credible accidents.

The primary console of the monitoring system is located in an area occupied by day-shift personnel who are trained to immediately respond to alarms. This console includes: low-range system count rate meters, recorders and annunciators; high-range system recorders, annunciators and bypass key provisions; and anemometer recorders. An auxiliary console with a low-range system annunciator, high-range recorders and annunciators, and anemometer recorders is located near the control room operated by the facility emergency coordinator in an emergency. A duplicate auxillary panel is located near a building equipment alarm center which is continuously occupied by service personnel who would respond to alarms when day workers are not present.

Low-Range Monitor

A four-channel monitor[1] developed for continuous monitoring for airborne radioactive materials in areas occupied by personnel was adapted for surveillance of accumulations on air samples collected from ducts or stacks (Figure 2).

The detectors are photomultiplier tubes light-coupled to scintillating materials; each is matched to a coaxial cable with a transistorized preamplifier.

For alpha detection, a decal of approximately 15 mg/cm^2 zinc sulfide is mounted on a 3-inch-diameter photomultiplier tube. For beta detection, a 0.010-inch-thick Nuclear Enterprises #102 plastic scintillator is mounted on a 2-inch-diameter photomultiplier tube. These scintillator assemblies are covered with 0.0025-inch-thick aluminized *Mylar** to light-proof the detector.

The count rate circuit is made up of five interconnecting plug-in circuit boards. The count rate meter accepts pulses of various sizes and shapes and converts them to pulses of constant width and amplitude for presentation to a 0 to 100 μamp dc readout meter on the front panel of the monitor console. The readout meter is a contact-making type with locking coils. When the contact is closed, an alarm relay is activated until a reset pushbutton is operated. A miniature strip chart recorder (0 to 100 μamp dc) is connected in series with the meter to provide a permanent record. One of five ranges (3000, 10,000, 30,000, 100,000 and 300,000 counts/min) can be selected with a range switch that is mounted on the front panel.

To meet the design criteria for the stack surveillance system, a trip circuit was placed in series between the count rate meter and recorder. Alarm contacts were relocated from the readout meter locking coils (normally de-energized) to the trip circuit contacts which are normally energized. The trip circuit activates a "concern" alarm when the circuit is interrupted. Also, the trip circuit was designed to signal an alarm when the detector-count rate meter system fails.

Alpha or beta-gamma sources are mounted on detectors to provide a 10 to 20% indication (a source "zero") on the 10,000 counts/min range of low-range stack monitors. This feature provides a distinguishable and visible indication of the operability of the monitor on the range normally used for early detection of stack releases.

High-Range System

The high-range detectors are ionization chambers mounted near the fiberglass filter-charcoal canister sampling assembly. The two least-sensitive gamma detectors are LND, Inc. #503 gamma ionization chambers. In the three stacks with highest flow rates, Reuter-Stokes ionization chambers (RSG-1S), filled with 10 atmospheres of xenon, are used for greater sensitivity. The alpha ionization detector was built at SRL (Figure 3). Its response was measured from 10^5 dis/min to 10^{11} dis/min and was linear.

The detectors are connected to Keithley logarithmic picoammeters (Model 25013) by coaxial signal cables, which are as short as possible to minimize spurious picoammeter signals potentially caused by flexing or vibrating the coaxial cables. A bypass key is used to deactivate the picoammeter when air samples are replaced because the signal cables might be moved or flexed. The logarithmic picoammeter signal (10^{-13} amps to 10^{-7} amps) is transmitted to a Brown recorder in each of the panels of the instrument racks. The scale on the recorder indicates the integrated release.

Three alarm points are set on the Brown recorders for failure of the high-range monitor channel, "alert" level releases, and "action" level releases. The alarm signal from a recorder is transmitted to a 12-point Visi-Con Mark V annunciator (24V) in the primary console of the instrument racks (Figure 4).

---

* Tradename of Du Pont Company, Wilmington, Del.

Sources are mounted on alpha ionization chambers and are adjusted to provide a source "zero" of 3×10^{-13} amps. Gamma sources are mounted on or near the low-range beta scintillation detectors and adjusted to provide a source "zero" of 3×10^{-13} amp on the high-range channel while providing a source "zero" of 10 to 20% of the 10,000 counts/min scale on the low-range channel.

Alarms, Circuitry, and Settings

Alarm signals from recorders or recorder circuits are transmitted to the Visi-Con Mark V annunciators in the primary console of the instrument racks. These annunciators then transmit signals to identical annunciators in the two auxiliary panels of the instrument racks. (See Figure 5 for the schematic of the stack surveillance systems alarms.) Alarm relays are normally energized. Audible alarms are actuated when relays are de-energized and are distinctly different from "concern," "alert," or "action" alarms.

Annunciators on the primary console and on each of the two auxiliary units sound a chime of 71 decibels at 10 feet when the low-range system reaches the adjustable alarm point. These annunciators sound the chime when the low-range or high-range detection systems fail.

The primary Visi-Con annunciator and its auxiliary units sound a buzzer of 89 decibels at 10 feet when the "alert" alarm point is reached on any one of three Brown recorders receiving a signal from a picoammeter. A third set of primary and two auxiliary annunciators sound a horn of 100 decibels at 10 feet when the "action" alarm point is reached on any one of three Brown recorders receiving a signal from a picoammeter (Figure 6).

The "action" alarm level is set at an integrated release of 50 mCi of alpha activity or 1 Ci of ^{60}Co. With a release of 50 mCi of alpha activity, the primary problem would be contamination on the SRP and SRL site. No appreciable assimilations would be expected before personnel could go indoors. A release of 1 Ci of ^{60}Co is expected to cause contamination problems of about the same severity as a release of 50 mCi of alpha activity. If beta-gamma emitting radionuclides other than ^{60}Co are released, the "action" alarm level would correspond to a larger release (i.e., 3 to 4 Ci for aged fission products or 5 Ci of ^{131}I). These beta-gamma releases would result in consequences no greater than the release of 50 mCi of alpha activity or 1 Ci of ^{60}Co.

The "alert" alarm is set one decade below the "action" alarm. The "concern" level alarm is adjustable on the count rate meter of the low-range system and is used primarily as an operational early warning device. The alarm is usually set at 50% above background on the 10,000 counts/min scale. During a release of radioactivity, the range of the instrument is switched to 30,000 counts/min, then 100,000 counts/min, and finally 300,000 counts/min; the alarm can be reset on each scale. If the release continues and the accumulated deposit on the sample exceeds 300,000 counts/min, the low-range system continues to alarm.

Any annunciator relay contact interruptions in the primary console will send signals to the annunciators in auxiliary consoles. Interruptions of contacts in auxiliary consoles will cause alarm(s) only in the annunciator where the relay contact is lost. Spurious signals are indicated on the annunciator by the presence of both a red and green light.

Alarms on annunciators must be acknowledged separately in the three consoles. A sound-powered phone is provided on each panel for communications during calibration or servicing of the system.

The key for the key bypass of picoammeters normally stays in the primary console of instrument racks. When the key is removed, an alarm (chime) sounds at all three consoles and must be acknowledged at individual consoles. When the alarm is acknowledged, a sign "Key Bypass in Use" is illuminated near the alarm devices (Figure 6). When an individual picoammeter is switched to bypass, a signal of 6×10^{-13} amps is transmitted to its recorder.

Response to Alarms

The prerequisite for immediately initiating the protective action plan will be concurrent alarms from the low-range and high-range monitors. The sequence of alarms required is "concern" level, then "alert" level, and finally "action" level. The individual responding to these sequential alarms immediately notifies the Consolidated Emergency Control Center of the release and wind data using a direct-wired phone mounted on the consoles of the instrument racks. The Control Center makes a pre-determined announcement through the public address system in all areas. The announcement advises personnel to go indoors. Also, main electrical power is interrupted to supply air fans to prevent drawing contaminated air into the buildings.

If the "concern" and "alert" alarms do not sound prior to the sounding of the "action" alarm, the validity of the "action" alarm must be verified before the Consolidated Emergency Control Center is called to initiate the protective action plan. The recorder plots must be inspected, and usually a radiometric assay of accumulations on sampling devices is necessary. The recorder on the console supply voltage must be inspected for indication of line voltage transients and possible power interruptions. If the low-range system has failed, then action must be taken on the basis of the "alert" alarm followed by the "action" alarm. Procedures specify other possibilities for alarms or system failures and define investigative and corrective actions.

Wind speed and horizontal and vertical variations are transmitted to the Consolidated Emergency Control Center by the direct-wired phone. Recorders for the anemometers system (a bivane sensor at 85 feet elevation) are located in each console of the instrument racks.

The Control Center staff maintains contact with the individual who responded to the alarms. The staff is advised when the released radionuclides are identified or the facility releasing the radionuclide(s) is determined. Wind data and quantities of radioisotopes released are plotted on a monograph to induce estimates of off-site dose to individuals. A series of monographs were constructed from meterological predictions of down-wind dose equivalents based on the Gaussian plume model(2) for ^{131}I, ^{60}Co, ^{238}Pu, ^{244}Cm, and ^{252}Cf.

Summary

A low-range system of alpha and beta scintillator detectors and a high-range system of alpha and gamma ionization chambers provide a stack surveillance system. Visual and audible alarms are activated when alarm points are exceeded in count rate meter circuits of the low-range system or on strip chart recorders of the high-range system.

The surveillance system provides "concern" alarms which are useful in attempting to curtail release mechanisms when radioactivity first appears in stack exhaust gases; "alert" alarms which are used to alert the facility emergency coordinator and his control teams; "action" alarms and data for immediate initiation of protective action procedures if a large amount of radioactivity is released from a stack; and recorded data for releases which continue after the "action" alarm is exceeded.

References

1. W. J. Woodward. "A Four Channel Monitor for Airborne Radioactive Contaminants." USAEC Report DP-1176, E. I. du Pont de Nemours & Co., Savannah River Laboratory, Aiken, S. C. (1969).

2. R. E. Cooper and B. C. Rusche. "The SRL Meterological Program and Off-Site Dose Calculations." USAEC Report DP-1163, E. I. du Pont de Nemours & Co., Savannah River Laboratory, Aiken, S. C. (1968).

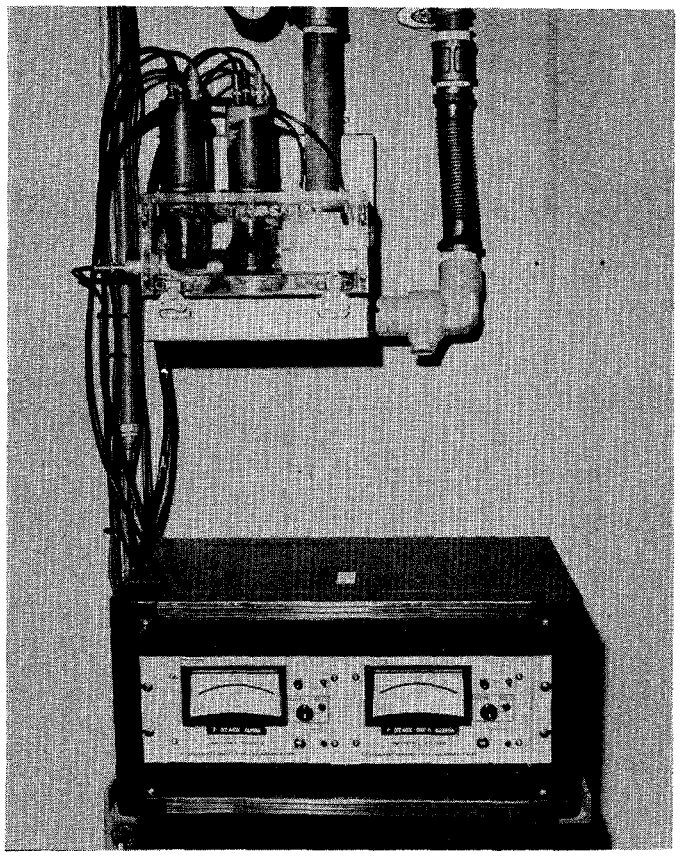

FIGURE 1. SAMPLING ASSEMBLY WITH LOW-RANGE AND HIGH-RANGE DETECTORS

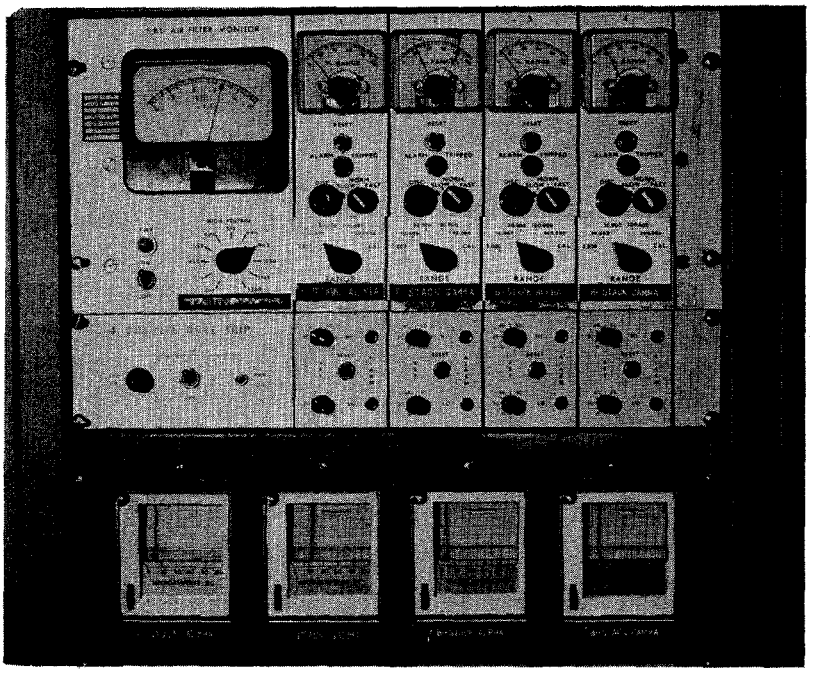

FIGURE 2. LOW-RANGE COUNT RATE METER-RECORDER CONSOLE

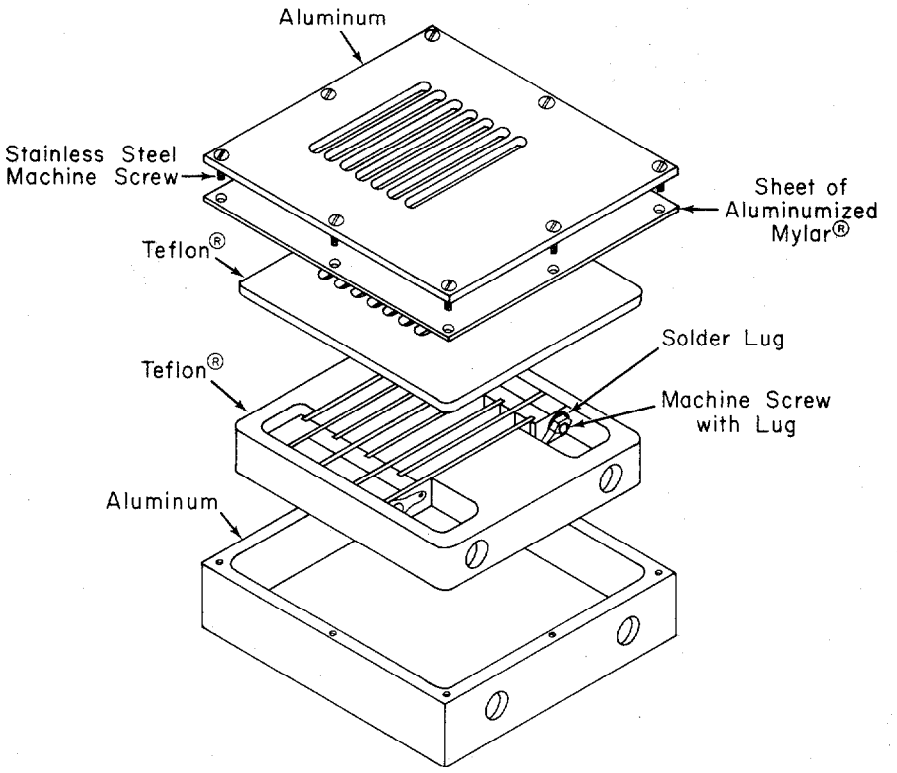

FIGURE 4. HIGH-RANGE CONSOLE

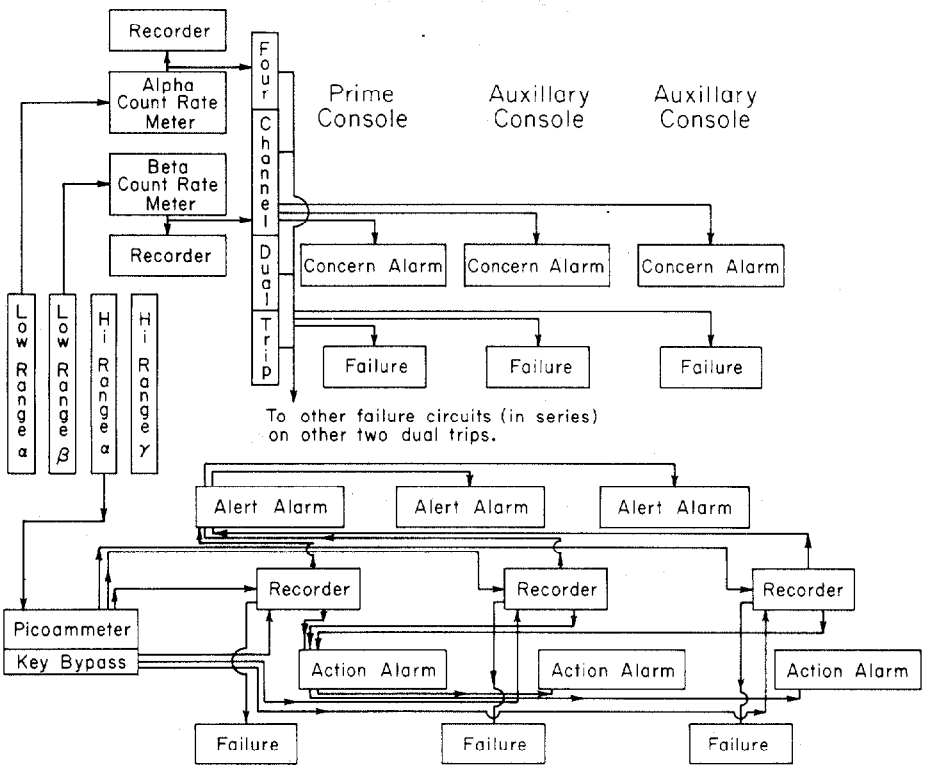

FIGURE 5. SCHEMATIC OF RECORDERS AND ANNUNCIATORS OF STACK SURVEILLANCE SYSTEM

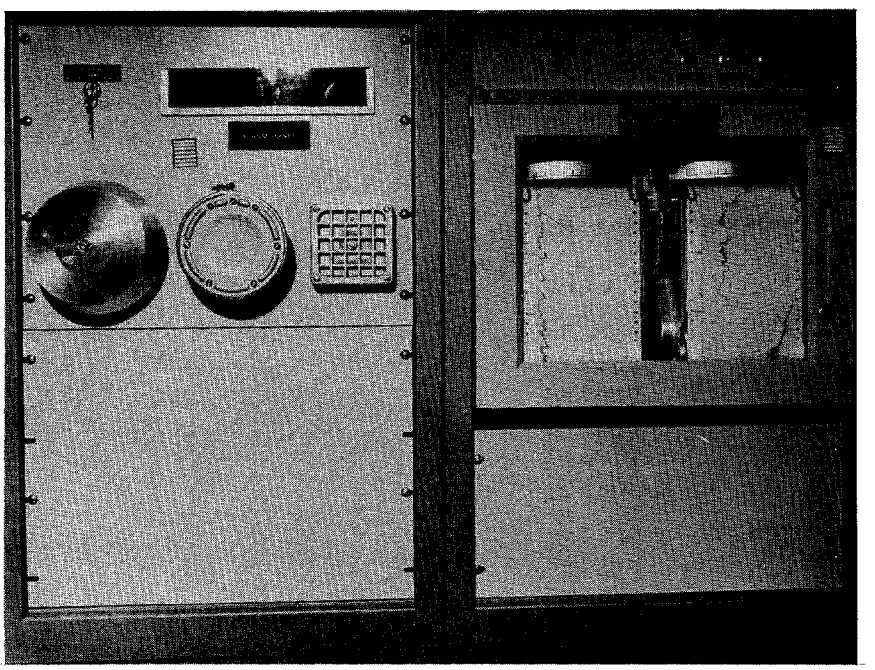

FIGURE 6. ALARM DEVICES AND KEY BYPASS

DISCUSSION

WILHELM: If I have understood you correctly, you said you are able with your instruments to measure iodine values, too. Is that right?

MOYER: Yes.

WILHELM: What is the detection limit?

MOYER: In our system, the low-level beta scintillator will detect from a few microcuries integrated release out of the stack up to around 100 microcuries. The high range system with our gamma probe will detect larger amounts up to multicurie quantities of radioiodine.

WILHELM: I think the problem in iodine monitoring is that iodine appears together with rare gases in the reactor off-gas. But the maximum permissible levels for rare gases are much higher than for iodine and therefore, you must have a specific instrument to measure iodine which does not respond to rare gases. There is still another problem; I, personally, think that reactors may be equipped with standby filter systems if a reliable signal can be obtained when the iodine concentration in the reactor off-gas becomes intolerably high. I think that such a measuring system is available today.

MOYER: Concerning the identification of iodine, what I have described is a gross monitoring system. That, you recognize. I have not described the series of monitors within the building itself that are located in various portions of the exhaust systems and in the duct feeder systems. With a good knowledge of the operation, a rise in activity in any of the side streams feeding into the main exhaust system gives a very early clue as to the isotope to look for in the stack release. We have to rely on analyses of operations and early warning systems at other points to tell us what the isotope is in the case of beta-gammas.

WILHELM: I still don't see how you get a distinct answer to the question of whether you have iodine or rare gas activity. A continuously working monitor accumulating iodine on an adsorber material will also adsorb rare gases. The measured activity of the rare gases may increase by a factor of 100 to 200 through the adsorption process on charcoal. Having this in mind, I just can't judge how you can assess accurately the iodine concentration in the region where the standby iodine filters should be operated.

ETTINGER: I think Dr. Wilhelm's point is that you can't distinguish between iodine and the rare gases, and that your concern levels are different. Dr. Wilhelm, I think the sampling system that has been described does not distinguish between these except for the difference in efficiency between iodine and the rare gases. It is

not as sophisticated a system as you would like. Is that a fair interpretation?

MOYER: That is fair. This system was never intended to be sophisticated. It was intended as a system to take care of a specific laboratory's problems, wherein we handle long-term cooled fuel elements. We do not have a noble gas problem in this laboratory. Therefore, our situation concerning iodine is a considerably simpler one compared to a reactor.

AN EVALUATION OF MATERIALS AND TECHNIQUES USED FOR MONITORING AIRBORNE RADIOIODINE SPECIES*

J. H. Keller, T. R. Thomas, D. T. Pence, and W. J. Maeck

Allied Chemical Corporation
Idaho Chemical Programs - Operations Office
National Reactor Testing Station
Idaho Falls, Idaho

Abstract

Recent sampling studies at operating boiling water reactors indicated the majority of the iodine being emitted from the stack is non-elemental iodine. A laboratory study was conducted to determine the methyl iodide adsorption efficiency of various types of charcoal cartridges frequently used in sampling devices. Comparison data for silver zeolite is given. Both commercially packaged sampling units and laboratory-prepared units were evaluated. Also measured was the elemental iodine adsorption efficiency for commercially packaged charcoal samplers. Because environmental sampling involves sampling of air having very low concentrations of airborne iodine species, the tendency is to sample at high flow rates. This practice can only lead to the reporting of abnormally low results, especially for methyl iodide. Based on our studies, recommended criteria for sampler design and operation are given.

Text

The primary purpose of routine monitoring of airborne activity in nuclear facilities is to provide information to protect workers from excessive exposure to radioactive materials, and to ensure that effluent release rates are known and that the population in the surrounding environment is not exposed to radiation in excess of the established limits. Secondary benefits of a monitoring program are a better understanding of plant operation and the identification of off normal operation.

In the routine operation of nuclear facilities, small quantities of radioactive materials may be released to the environment by way of liquid or gaseous effluents. The gaseous releases are primarily radioactive noble gases and radioiodines. Because of the severe biological significance of radioiodine and its potential concentration in the biosphere, the monitoring of these species is most important.

The monitoring of airborne radioiodine is complicated by the probable existence of several species including particulate iodine or iodine bound to foreign particles, gaseous elemental iodine, and gaseous non-elemental compounds. A well designed monitoring program should be capable of distinguishing all possible iodine forms. While it may not always be necessary to differentiate between the various species, care should be taken so that no bias results by missing one or more of the possible species.

In a recent paper[1] Kabat concluded that the airborne radioiodine present in the Spent Fuel Bay of the Pickering Generating Station contained a negligible amount of elemental iodine and a large amount of gaseous non-elemental iodine.

*Work performed under USAEC Contract (AT-(10-1)-1375) S-72-1

Tachikawa and Naritomi[2] reported the buildup of methyl and ethyl iodide in the off-gas from a radioiodine production facility. Schmitt et al[3] reported that organic iodides can form readily in nitric acid solutions containing iodine by interaction with organic impurities.

Recently an extensive study of the off-gas system of an operating boiling water reactor (BWR) was undertaken to determine the species of iodine present. The sampler used in these studies, shown in Fig. 1, has been described previously[4]. It was originally developed and tested for use in differentiating the various iodine species expected in the steam-saturated air atmosphere of the LOFT tests. This sampler consists of, in order of flow, a series of HEPA type particulate filters, an elemental iodine adsorbent, a hypoiodous acid adsorbent, a methyl iodide adsorbent, and a backup bed. The initial development and testing had shown good performance of the sampler components in steam-saturated atmospheres; however, performance had not been proven at the very low iodine and methyl iodide concentrations expected in BWR off-gas lines. In order to confirm the expected ability of the sampler to differentiate iodine species at less than saturated conditions, a laboratory program was undertaken to establish the performance of each of the sampler components using specific iodine species.

The evaluation of the iodine and methyl iodide adsorbents was done in about 5% relative humidity atmospheres. For elemental iodine, the adsorption efficiency was greater than 90% in one-hour tests at a face velocity of 45 ft/min when the concentration of iodine was varied from 3×10^{-10} to 1×10^{-12} μg/cc. Flow dependency tests showed greater than 90% adsorption for elemental iodine when the face velocity was varied from 25 to 55 ft/min in one-hour tests at an I_2 concentration 1.5×10^{-9} μg/cc.

The methyl iodide adsorbent showed an adsorption efficiency of greater than 99% in one-hour tests over the face velocity range of 4 to 45 fpm at a methyl iodide concentration of about 10^{-10} μg/cc. Less than 3% of the incident methyl iodide was adsorbed by the elemental and hypoiodous acid adsorbents.

Because of the difficulties in generating hypoiodous acid test streams of high purity at less than 100% relative humidity and because of the uncertainty of the stability of this species in such streams, it is difficult to establish the adsorption efficiency of the HOI adsorbent. Based on several tests in streams of 50% relative humidity, the efficiency appears to be at least 80% at an incident iodine concentration of about 1.5×10^{-9} μg/cc.

Using the sampler described, samples were taken at two points in the off-gas system of an operating BWR, one at the steam jet air ejector and the other at the end of the delay line just prior to entry into the plant stack. This particular reactor system included a commercial charcoal filter installed upstream of the delay line sampling point. The filter unit was rated for 200 cfm flow and was operating at about 100 cfm. The end of the delay line sample, therefore, represents radioiodine activity which passed through the 2-in. charcoal filter and was not adsorbed.

The results for one pair of samples (one at the steam jet air-ejector and the other at the end of the delay line behind the charcoal filter unit) are given in Table 1. Other sampling data from this reactor are essentially the same. These data show the presence of small quantities of particulate iodine after the filter unit while none was observed at the steam jet air-ejector. This suggests

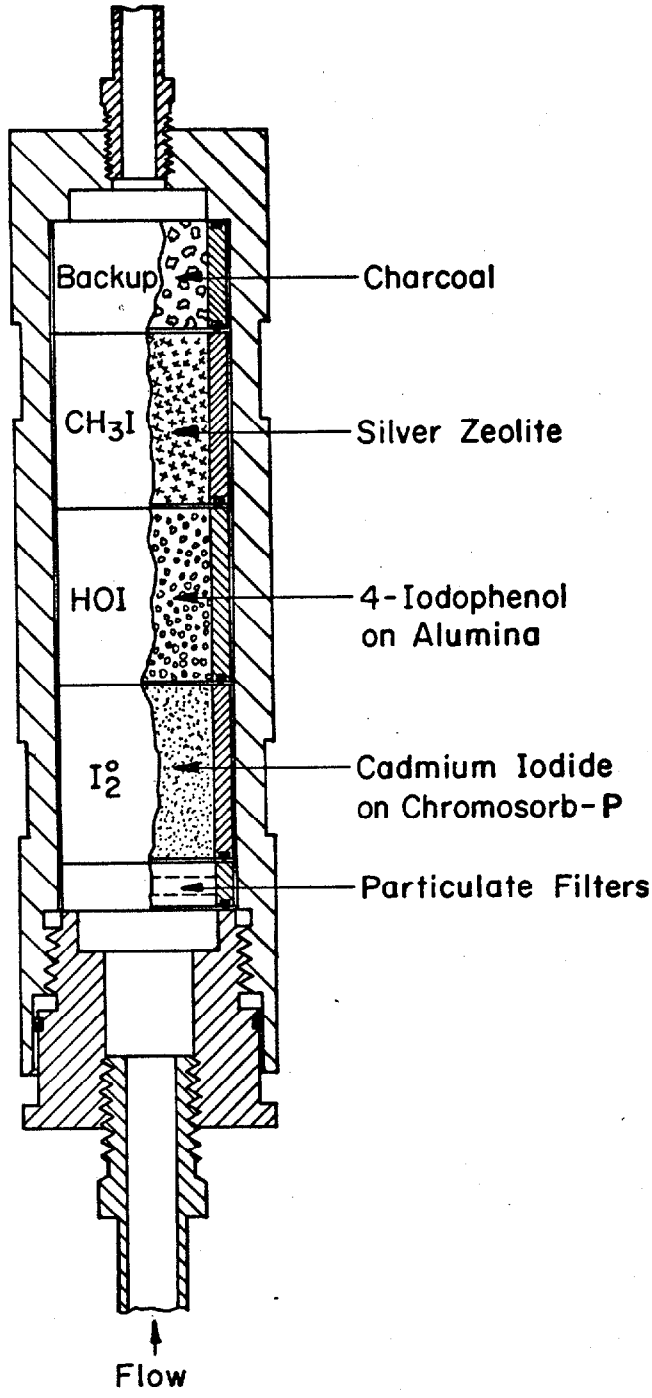

Fig I. IODINE SPECIES SAMPLER

ACC-A-0350

TABLE 1. SUMMARY OF IODINE SPECIES DISTRIBUTION IN A BOILING WATER REACTOR OFF-GAS SYSTEM

	Fraction of Species at Steam Jet Air Ejector					Fraction of Species at End of Delay Line*[a]					Ratio of the absolute quantity SJAE/Delay				
Isotope	^{134}I	^{132}I	^{135}I	^{133}I	^{131}I	^{134}I	^{132}I	^{135}I	^{133}I	^{131}I	^{134}I	^{132}I	^{135}I	^{133}I	^{131}I
Particulate	ND[b]	ND	ND	ND	ND	ND	.039	ND	ND	.015					
Elemental	.350	.317	.282	.244	.240	.037	.035	.039	.044	.054					
Hypoiodous Acid	.379	.362	.358	.348	.320	.196	.219	.249	.232	.234	4.8	4.2	3.4	3.6	2.7
Organic	.271	.316	.360	.408	.439	.767	.705	.712	.724	.698	.9	1.1	1.2	1.3	1.2

(a) Correction for 70 minutes transition in delay line.

(b) ND = <0.01.

the possibility of some slight dusting of the charcoal bed. The apparent presence of about 4% elemental iodine after the charcoal bed is attributed to partial retention of hypoiodous acid by the elemental iodine adsorbent in the sampler unit and is probably not a true reflection of the elemental iodine in the sample stream. The major point is that the effluent being released to the stack and hence, to the environment is predominantly organic iodine with negligible amounts of elemental iodine.

In a similar study at a second BWR which did not have a charcoal filter unit, the results were qualitatively the same. There was no particulate iodine, negligible amounts of elemental iodine, and the predominant species was again organic iodine.

Because many sampling devices are currently in use, a laboratory program was undertaken to evaluate the performance of several commercially available charcoal adsorbents as elemental iodine and methyl iodide adsorbents. A wide variation in species concentration, relative humidity, and flow rate was used. This study was not intended to be an exhaustive investigation of all the available configurations, but rather was to consider only representative types. Neither was this study intended to be an endorsement or condemnation of any particular product. A summary of the materials tested is given in Table 2.

For the elemental iodine studies, the elemental iodine was generated by reaction of carrier free iodine-131 as iodine with iodate in acid solution. The generated tagged iodine was swept from the reaction vessel with a slow helium purge, mixed with air and sampled by the test adsorbent. The test units were followed by deep backup beds of silver zeolite. The efficiency of the adsorbent was calculated by dividing the activity on the test bed by the total activity on the test and backup beds.

For elemental iodine, the adsorption efficiencies of both the charcoal cartridges and the charcoal impregnated paper was good, >99% over the range of conditions tested: face velocities from 40 to 200 ft/min, relative humidities from 5 to 75%, and iodine concentrations from 10^{-8} to 10^{-12} μg/cc. It is assumed that other comparable commercial materials would be equally effective as elemental iodine adsorbents over this range of conditions.

Methyl iodide was generated by reacting carrier free iodine-131 as iodide with dimethyl sulfate in the presence of calcium carbonate. The methyl iodide was swept from the reaction vessel with helium into an evacuated tank which was then pressurized with additional helium. The tagged methyl iodide was slowly released from the tank into various air streams which were sampled by the test adsorbent. Again a deep silver zeolite bed was used as the backup unit. The efficiencies were calculated in the same way as in the elemental iodine tests, and also by measuring the activity in a bleed stream. The results of the methyl iodide adsorption tests are shown in Figure 2.

The results for all of the adsorbents tested were disappointingly low. The silver zeolite and impregnated charcoals adsorbents have been shown to be more efficient than the results of these tests indicate[5]. The explanation for the low results seems to be poor canister design and/or lack of sufficient bed depth. The cartridges from manufacturer B gave widely varying results under the same conditions. A random sampling of ten of the manufacturer's special fill of these cartridges were subjected to mechanical vibration and in all cases, bed settling occurred. In several cases the settling was sufficient to allow the sample to

TABLE 2. MATERIALS USED IN THE LABORATORY ADSORPTION STUDIES

Type	Adsorbent Material	Mesh Size U.S. Standard	Cartridge Dimensions Diameter, in.	Bed Depth, in.	Tested with Elemental Iodine	Methyl Iodide
Cartridge Manufacturer A Special Fill	Iodized Charcoal	10-16	3.25	1.0		X
Cartridge Manufacturer B	Charcoal	12-20	1.75	0.75	X	X
Cartridge Manufacturer B Special Fill	Iodized Charcoal	8-16	1.75	0.75		X
Paper Manufacturer C	Charcoal Paper	---	3.25	---	X	X
Cartridge Laboratory Loaded*	Silver Zeolite	12-14	3.25	1.0		X

* Canisters for Manufacturer A were emptied and refilled with laboratory-prepared silver zeolite.

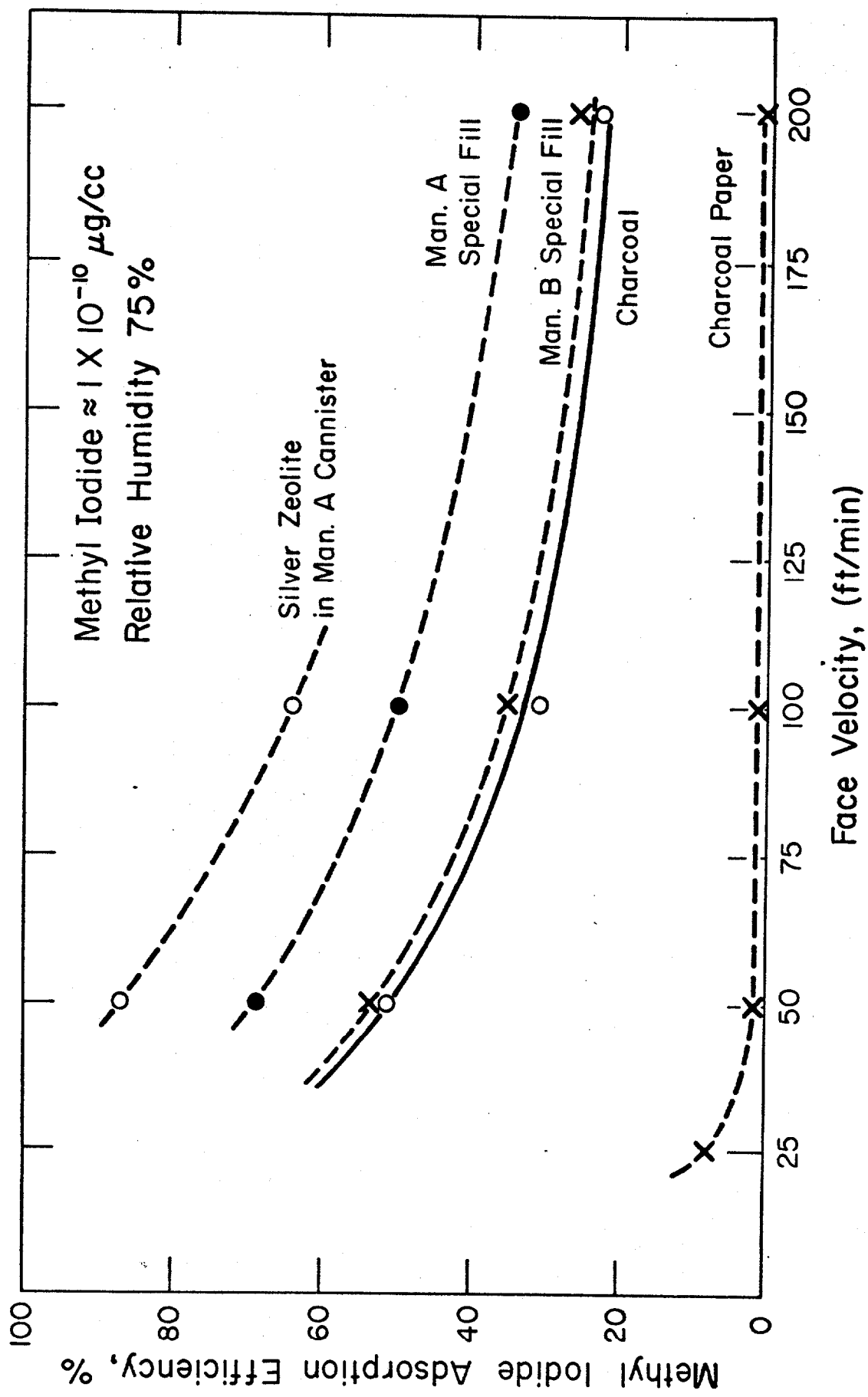

Fig 2. METHYL IODIDE ADSORPTION EFFICIENCY vs. FLOW RATE

ACC-A-0352

bypass the bed material if the cartridge were used in a vertical position. This was not a problem in the laboratory tests because the beds were tested in a horizontal position.

The shallow bed depth also contributes to the low efficiency. Kovach[6] states that as the concentration of the adsorbate decreases, deeper beds are required to attain a removal efficiency equal to that at higher concentration. Pence et al[7] will report more on adsorption efficiency as a function of the concentration for methyl iodide removal. The very thin charcoal paper has essentially no use in monitoring if there is any possibility of the presence of methyl iodide.

Based on the literature cited and on the results of the measurements made in BWR off-gas systems, there is a high probability that the predominant airborne radioiodine species being released from nuclear facilities is organic iodine. Unfortunately, none of the commercial sampling units in their current mode of operation will give reliable methyl iodide release data. Ideally, airborne iodine monitoring devices should use deep adsorbent beds (4-5 in.), contain small (40-50 mesh) granular material and be operated at low (<50 ft/min) flow rates.

Equally important to the collection of the sample is the analysis of the sample. Because this analysis is based on radiometric counting, precautions must be taken to ensure that the calibration standards are counted in the same geometry as the sample. Most radioiodine samples will be of low activity level and many will be rather bulky. The tendency is to count low level samples at or very near the surface of a scintillation detector where the detector efficiency is high. However, the efficiency of the detector is also changing most rapidly near the surface. It is, therefore, mandatory in order to minimize counting errors to use calibration standards of the same geometry as the samples to be analyzed.

Based on these studies and the above data, the following recommendations are offered for improving the measurement of airborne iodine releases and for better understanding the chemistry of airborne iodine in reactor systems.

1. Use a high efficiency particulate filter prior to the bulk sampling media.
2. Use as deep an adsorbent bed as possible but not less than that required to give a 0.1 sec residence time in the bed.
3. Use as small a particle size adsorbent (impregnated charcoal or equivalent) as possible consistent with the available pressure drop restrictions.
4. Operate the unit at as low a flow rate as possible consistent with the sensitivity requirement.
5. Use the collection assembly in a horizontal position preferably with the flow down through the unit.
6. Select the sampling media based on the radioiodine species to be sampled.
7. Only use sampling units from suppliers who are cognizant of sampling problems and who have a high degree of quality assurance.
8. Use a well characterized and well calibrated counting system.

References

1. M. J. Kabat, Experience with Gaseous Fission Products and Radioiodine at Ontario Hydro Nuclear Power Stations, 17th Annual Health Physics Society Meeting (June 1972).

2. E. Tachikawa and M. Naritomi, Chemical Forms of Airborne Radioiodine in Exhaust Air from Iodine-131 Production Plant, J. Nucl. Sci. Technol. (Tokyo), 8 #7 371-6 (1971).

3. J. M. Schmitt, D. J. Crouse and W. B. Howerton, Scrubbing of Iodine from Air Streams with Mercury Solutions, LMFBR Fuel Cycles Studies Program for April 1972 No. 38, ORNL-TM-3823 (1972).

4. J. H. Keller, F. A. Duce and W. J. Maeck, A Selective Adsorbent Sampling System for Differentiating Airborne Iodine Species, Proceedings of the Eleventh AEC Air Cleaning Conference, CONF-700816 (1970).

5. D. T. Pence, F. A. Duce and W. J. Maeck, A Study of the Adsorption Properties of Metal Zeolites for Airborne Iodine Species, Proceedings of the Eleventh AEC Air Cleaning Conference, CONF-700816 (1970).

6. J. L. Kovach, Adsorbents; Review and Projection, Proceedings of the Tenth AEC Air Cleaning Conference, CONF-680821 (1968).

7. D. T. Pence, F. A. Duce and W. J. Maeck, Developments in the Removal of Airborne Iodine Species with Metal-Substituted Zeolites, Proceedings of the Twelfth AEC Air Cleaning Conference, (To be published).

DISCUSSION

WILHELM: You mentioned that the charcoal cartridge should be as deep as possible, the granular size should be as small as possible, the air velocity should be as low as possible. Don't you think that all data on iodine removal efficiency presented by Adams at ORNL, Collins in England, and from other workers, too, should make it possible to construct a reliable charcoal cartridge?

KELLER: I agree 100 percent. For a number of years we have had monitoring devices in this country that have completely disregarded all of these data.

WILHELM: My opinion is that much more knowledge is available than you suggested.

KELLER: Unfortunately, much of the data that you referred to were taken at much, much higher concentrations (on the order of a milligram per gram of adsorbent). Mr. Kovach, in a paper at the 10th Air Cleaning Conference, indicated that as the concentration of the adsorbate goes down, a deeper and deeper bed is needed to get the same removal efficiency.

WILHELM: I would like to comment on that, too. We performed experiments in the very low concentration range, down to 10^{-9} $\mu g/m^3$, and we were not able to go further down because we would not get enough counts. So we went down as far as possible and I can show you definitely that there is no difference between the very high concentration and the very low concentration range with respect to removal efficiency of impregnated charcoal concerning methyl iodide. The problem, it seems to me, is that we are not able to prepare methyl iodide or other well-defined iodine compounds with a 100% purity. There may be a small amount of other compounds, too. Such impurities may falsely suggest the existence of very low removal efficiencies, if, through greater adsorber bed depths, the major quantities of the desired iodine compounds have already been removed. According to our experience, these effects play a minor role when the initial concentration of the desired iodine compounds lies in the extremely low concentration range.

KELLER: My only comment to that is, we are all using the same iodine. You are right; you either have an extremely large source that you can run for several days, which is a possibility, or you don't have enough to count. With reference to the last part of your comment, I am not convinced that it really makes much difference what this thing is that we can't adsorb. You say that it goes down, which means we are not adsorbing it. Now, I don't care if you call it methyl iodide or what you call it, the point is we are not adsorbing it. If we are trying to monitor total iodine, we should get it all.

WILHELM: I don't agree completely with that. If an iodine compound which has not yet been defined can neither be removed by charcoal nor by silver-impregnated molecular sieves, it is very improbable that the same compound is removed within the human respiration tract. Having this in mind, one could expect that there may not be a real problem and we should not make an issue of so-called penetrating iodine compounds until we have knowledge of whether they actually occur in reactor off-gases and are retained in the human body.

KELLER: Where were you at the Appendix I hearings?

KOVACH: I have a question. Have you tried good impregnated charcoal in your samples?

KELLER: Yes.

KOVACH: What were the results you obtained with it?

KELLER: The same.

JONAS: In your Figure 2, you showed the adsorption efficiency decreasing as a function of flow rate. What was your unit of measure of the adsorption efficiency?

KELLER: We used several techniques, depending on what we were working with. We used deep back-up beds and we also split the stream to give a lower velocity through a separate sampler.

JONAS: What were the units?

KELLER: Percent adsorption efficiency.

THE EVALUATION OF A STACK SAMPLING SYSTEM USING A HELIUM MASS SPECTROMETER LEAK DETECTOR

W. B. Kerr, R. E. McAtee, and L. T. Lakey
Allied Chemical Corporation
National Reactor Testing Station
Idaho Falls, Idaho

Abstract

The flow of gas in the 250-ft stack at the Idaho Chemical Processing Plant was measured, and the isokinetic stack sampler was shown to obtain a sample which is representative of the several streams entering the stack. This was accomplished without direct access to the stack by determining the helium concentration in a stack gas sample stream when helium was released into the separate waste gas streams.

A helium leak-detector was modified to provide a continuous record of the helium concentration in the stack gas sample. The technique of releasing helium and determining the concentration with this type equipment has other applications--such as, calibrating flow instruments, determining air-exchange rates in laboratories or buildings, and checking for conformance to antipollution standards.

I. Introduction

At the Idaho Chemical Processing Plant (ICPP), irradiated fuel elements are dissolved, and the residual uranium is separated for recycling into new fuel elements. These operations produce large volumes of radioactive wastes which are stored until they can be converted to granular solids by fluidized-bed calcination. A miscellany of dissolvers, tanks, columns, scrubbers, vessels, storage tanks, and other equipment is used in these operations. The vapors, fumes, sparge air, and motive gases used or produced in the varied equipment are collected into several separate off-gas systems. These, and two building ventilation exhaust systems, discharge separately into the lower 30 ft of a 250-ft stack. Stack gas is released to the atmosphere at a rate in excess of 100,000 cfm.

A sampling system (Figure 1) with a single null-type isokinetic sampling head (Figure 2), located at the 90-ft level in the stack, is used to draw a continuous sample of the stack gas being released to the atmosphere. The gas sample is brought to ground level where the particulates are removed by filtering. These particulates, representing a 24-hr sampling period, are analyzed to determine the radionuclide species and quantities. These data are then used to calculate the daily total emissions. This sampling system has been in operation for about 14 years.

Recent emphasis, especially by government agencies, has made it desirable to prove that the sample reaching the filter is representative of the stack effluent.

II. Analysis

An evaluation of the ICPP stack sampler system must include at least the following items: (a) determining whether the several gas streams are adequately mixed in the stack prior to sampling, (b) determining the stack flow, and (c) determining the degree of particulate loss between the sampling point and the filter.

ACC-A-0237

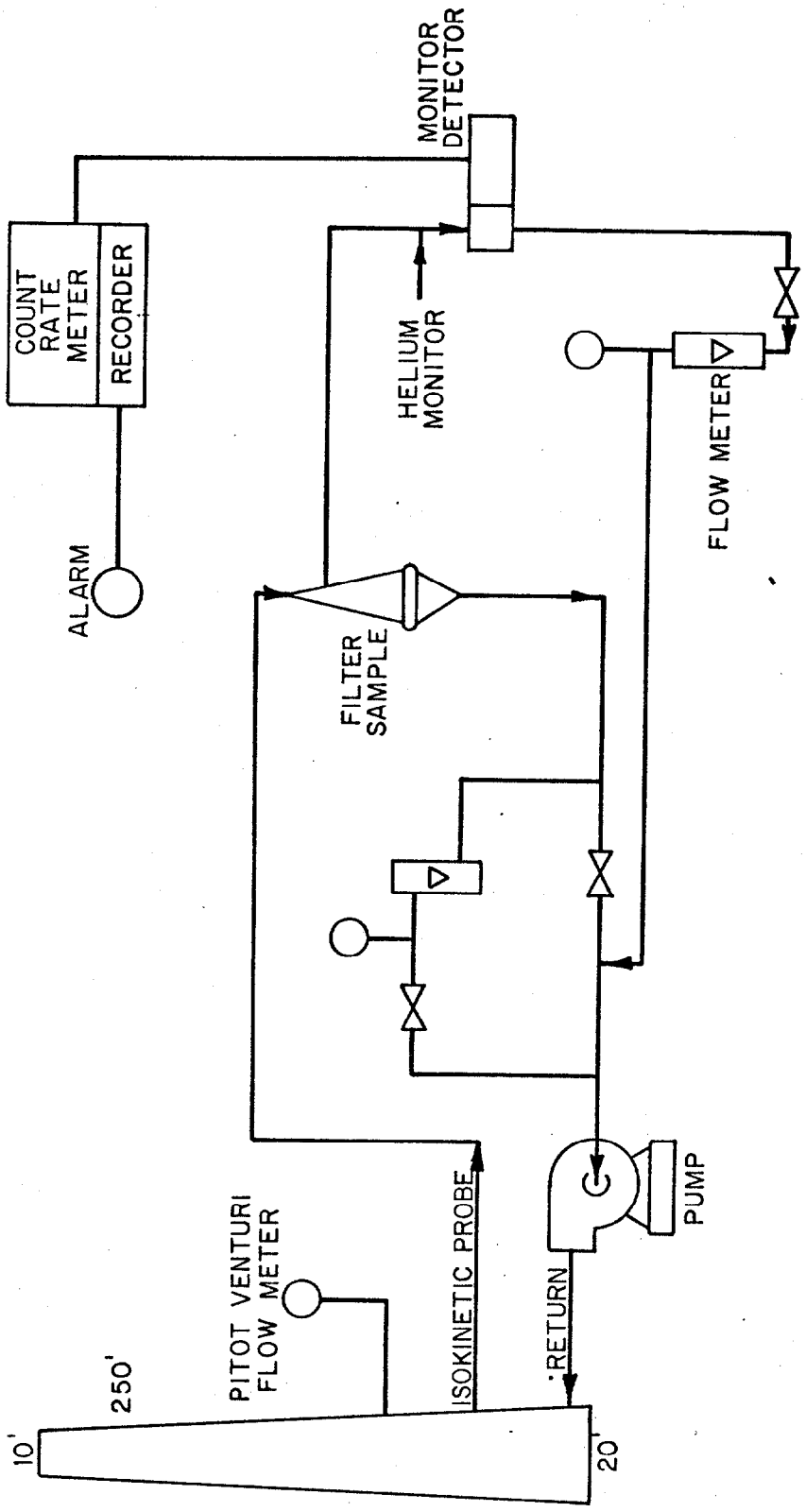

FIG. 1
FLOWSHEET OF ICPP STACK MONITORING SYSTEM

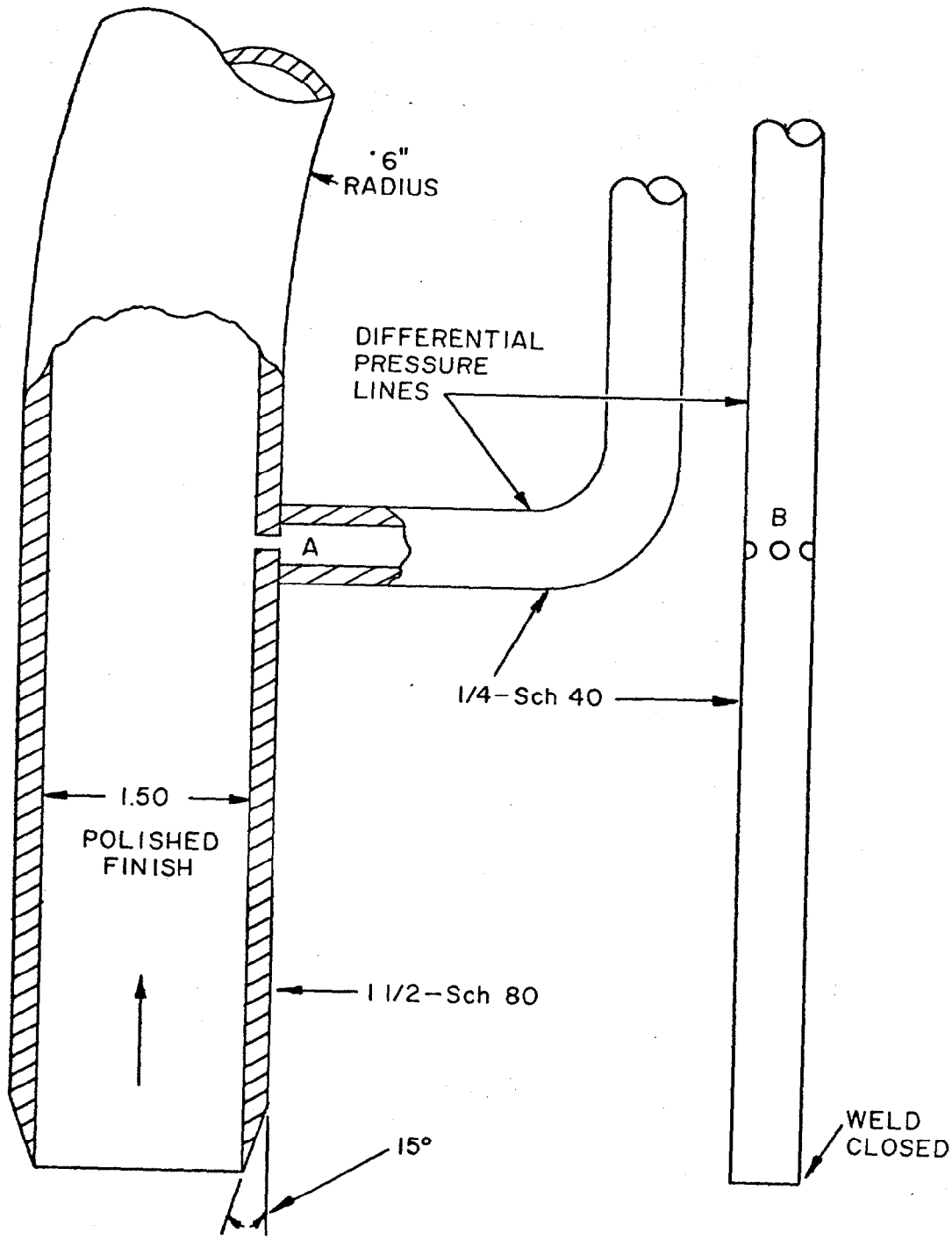

FIGURE 2.
ICPP ISOKINETIC SAMPLER HEAD

ACC-A-0247

It was evident that if the separate streams were to retain their identity at the sampling location, the single sampling head could not provide adequate samples; if the stack flow were not known, calculations of stack emissions would be in error; and, if the particulates were deposited on the surface of the line between the sampler head and filter, the sample could not be representative of the stack stream.

The evaluation program could be expensive and time-consuming if accomplished by conventional methods. The sampling head was installed to preclude removal from the 4-in. diameter access port without destruction (Figure 3), and the stack had only one access port at each 45 ft of elevation, thus, eliminating normal velocity traverses and sampling at 90° across the stack. Working platforms had not been provided at the access ports--a small platform was available at the 90-ft sampling level, and additional sampling ports could be made available only by drilling through the outside reinforced concrete stack then through an inner, free-standing, acid brick liner.

In lieu of conventional methods of probing the stack for both concentration gradients and velocities, it was proposed that a tracer material be released into the separate streams entering the stack. If the streams were adequately mixed at the sampling location, the concentration of the tracer gas in the sample stream would not vary significantly with changes in release location. Similarly, if the streams were mixed, the stack flow could be accurately calculated from the dilution of the tracer material by the stack stream.

The tracer material should be a gas to avoid sampling problems such as aniso-kinetic sampling rates and deposition on the surface of the sampling line. The tracer gas should also be foreign to the stack stream, nonreactive with the system piping and possible contaminants, easily detected and measured, nonhazardous when released to the environs, and readily available and inexpensive.

The loss of particulates from the sample stream by deposition on the surface of the sampling line is a problem separate from those of mixing and flow measuring; work on this is being continued at the ICPP.

III. Development Work

An existing CEC Model 24-120 helium mass spectrometer leak detector was calibrated with helium-air mixtures and then used to monitor the helium in the stack sample stream. Helium was released at known rates into a building ventilation exhaust system which supplies approximately 90% of the total stack flow. The indicated helium concentration in the stack sample stream was not reproducible with this instrument during successive helium releases at the same rate. These tests were temporarily discontinued.

Other experimental work at ICPP had indicated that methyl iodide was a suitable tracer gas. When tagged with I-131, its quantity could be measured by counting techniques. Methyl iodide tagged with radioiodine was released, and that portion present in the sample stream was collected on activated charcoal for measurement. The results were encouraging, but the physical problems inherent in handling the radioiodine and the possible criticisms expected as a result of the deliberate release of a material containing biologically active radioiodine led to the termination of the test using this material.

Members of the Analytical Chemistry Branch at the ICPP modified the helium leak detector, previously discussed, to produce an instrument to provide a

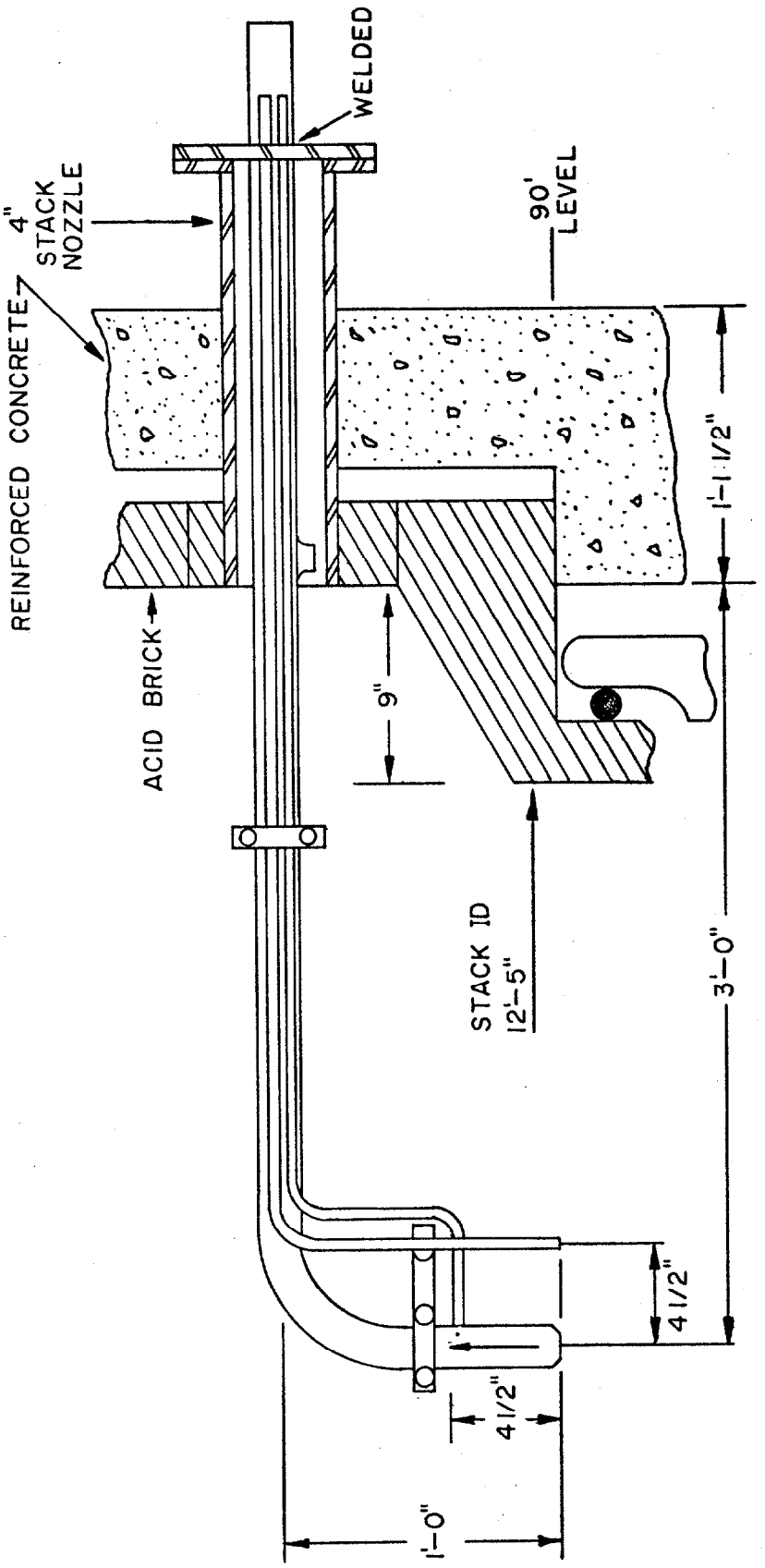

FIGURE 3.
ICPP SAMPLER IN STACK NOZZLE

ACC-A-0246

continuous and reproducible analysis of helium in air. This was accomplished by providing a regulated voltage power supply for the electronic and diffusion pump heater circuits, an expanded scale electrometer on the vacuum gage, a recorder for the output current from the mass spectrometer, and an ultrafine adjustable valve (vacuum leak) at the inlet to the system. The revised instrument is shown schematically in Figure 4.

The calibration of the leak detector with mixtures of helium and air, produced in-house, appeared to be adequate for the stack evaluation. Since no equipment was available to check the accuracy of the test gas mixtures, commercially prepared mixtures were procured at approximately 50 and 100 ppm helium in nitrogen. The analyses of these mixtures were guaranteed within $\pm$ 2% of the reported values. These mixtures became the bases for routine calibration of the instrument. The calibration is shown in Figure 5.

A manifold of three helium cylinders, each having a separate pressure regulator and discharging through a common calibrated rotameter, was assembled for this test program. This assembly is shown in Figure 6. The helium is released at approximately 5 and 10 scfm to produce concentrations in the stack approximating those of the test mixtures. At the higher release rate, one cylinder will last approximately 20 minutes. With the three-cylinder manifold, tanks may be switched into, or out of, service and expended tanks replaced without interrupting the test.

IV. Results and Conclusions

Helium was released alternately at the two rates into the building ventilation exhaust system and was monitored in the stack sample system. This was a test to determine the reproducibility of the combined release and monitoring systems. The results were excellent, as shown in Table I, with the average deviation from the average concentration in the stack samples about 1.6% for five tests at the lower release rate and about 0.5% for five tests at the higher release rate. The calculated stack flow at the time of these tests was 101,000 scfm. This flow was calculated using Equation (1) below.

$$\text{Stack flow (scfm)} = \frac{\text{Helium release rate (scfm)} \times 10^6}{\text{Helium concentration in stack (ppm)}} \qquad (1)$$

TABLE I

Test for Combined Reproducibility
Helium Release and Measurement

Helium Rate = 5.35 (scfm)		Helium Rate = 10.42 (scfm)	
Release No.	Sample Conc (ppm)	Release No.	Sample Conc (ppm)
1	51.5	2	103.0
3	54.0	4	103.1
5	52.5	6	101.7
7	53.5	8	103.0
9	53.7	10	103.7
Average	53.04		102.9
Average Dev'n	.832		.48
Average Dev'n (%)	1.57		0.47
Stack Flow--Calc'd	101,000 (scfm)		101,000 (scfm)

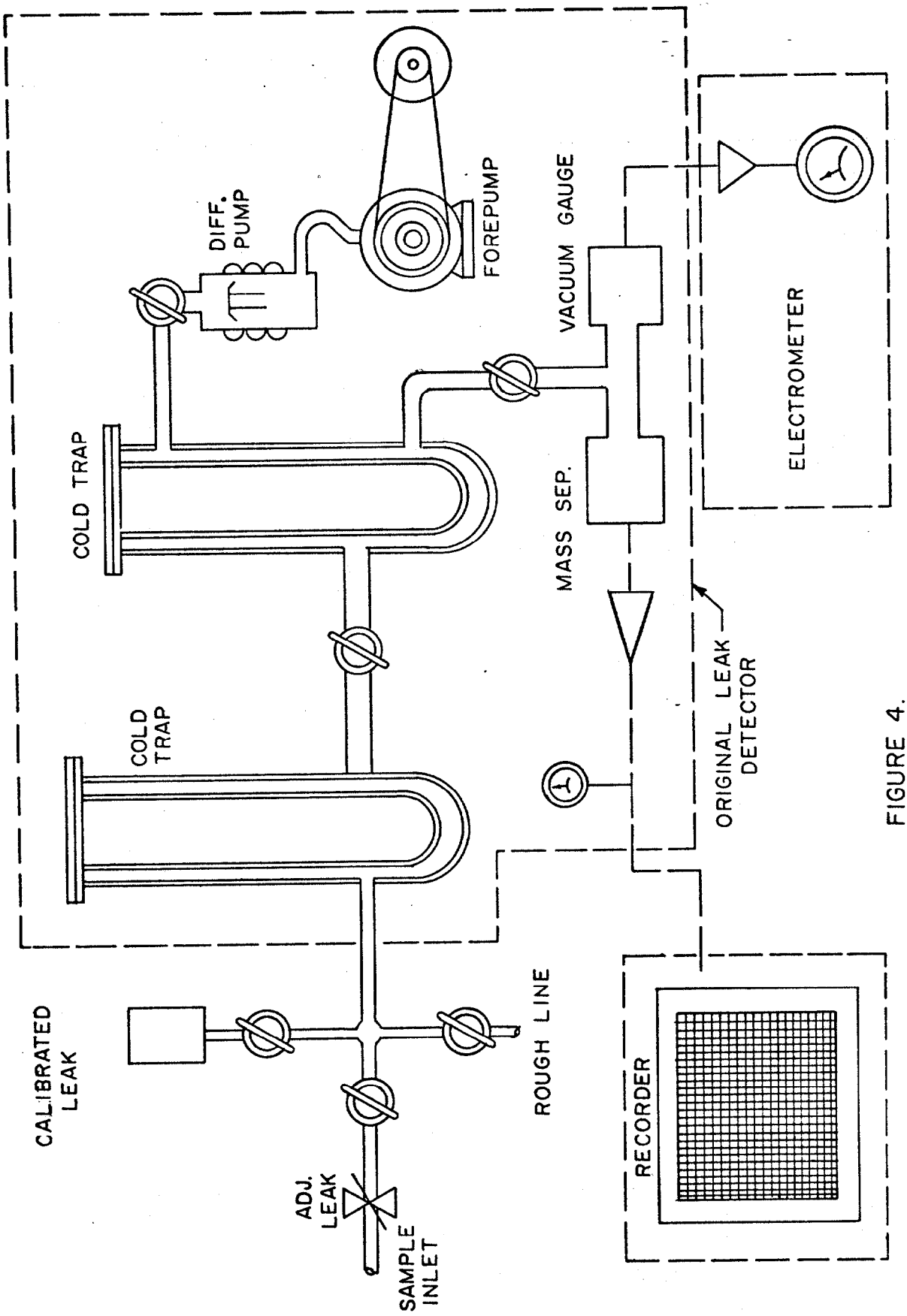

FIGURE 4.
MODIFIED HELIUM LEAK DETECTOR

ACC-A-0249

ACC-A-0254

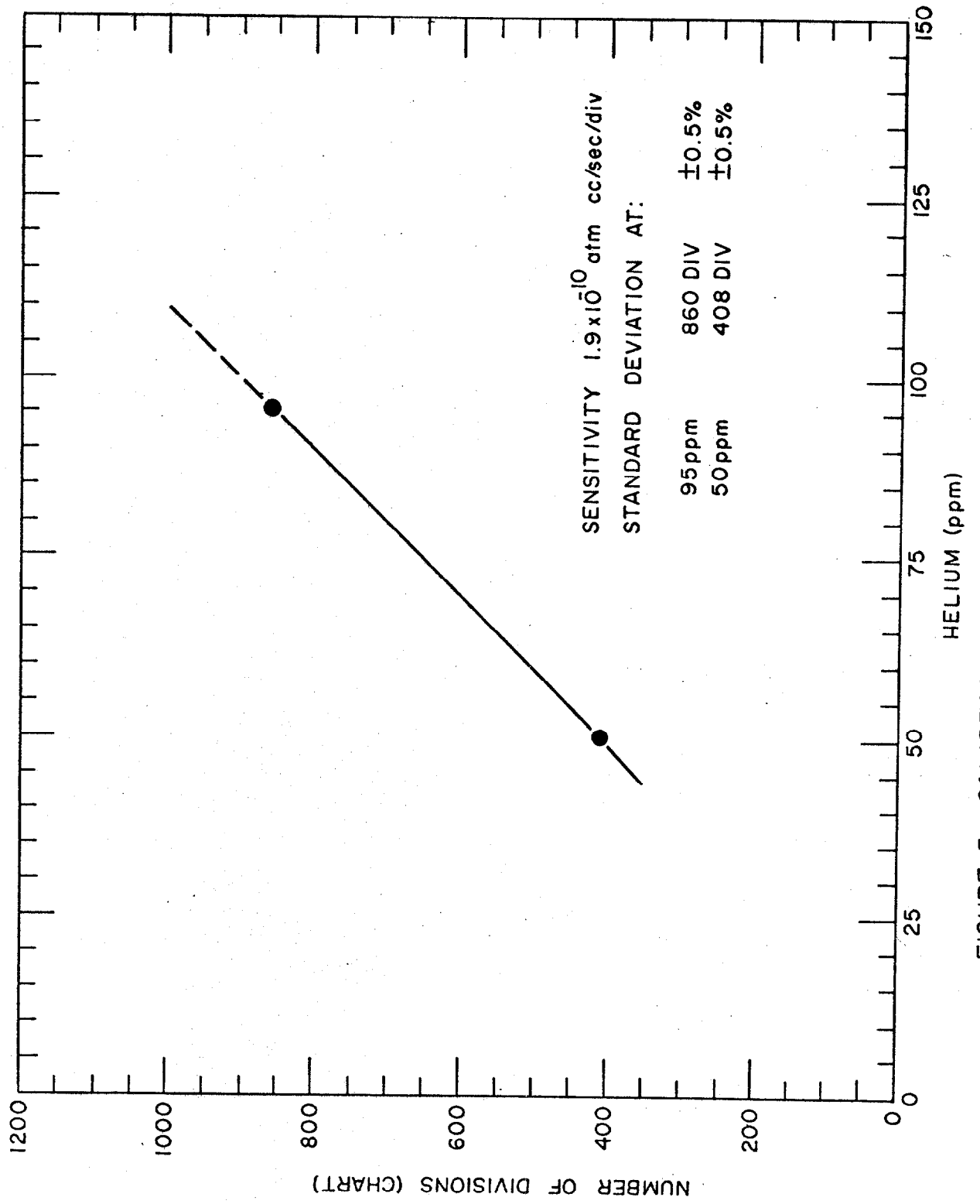

FIGURE 5. CALIBRATION OF HELIUM LEAK DETECTOR

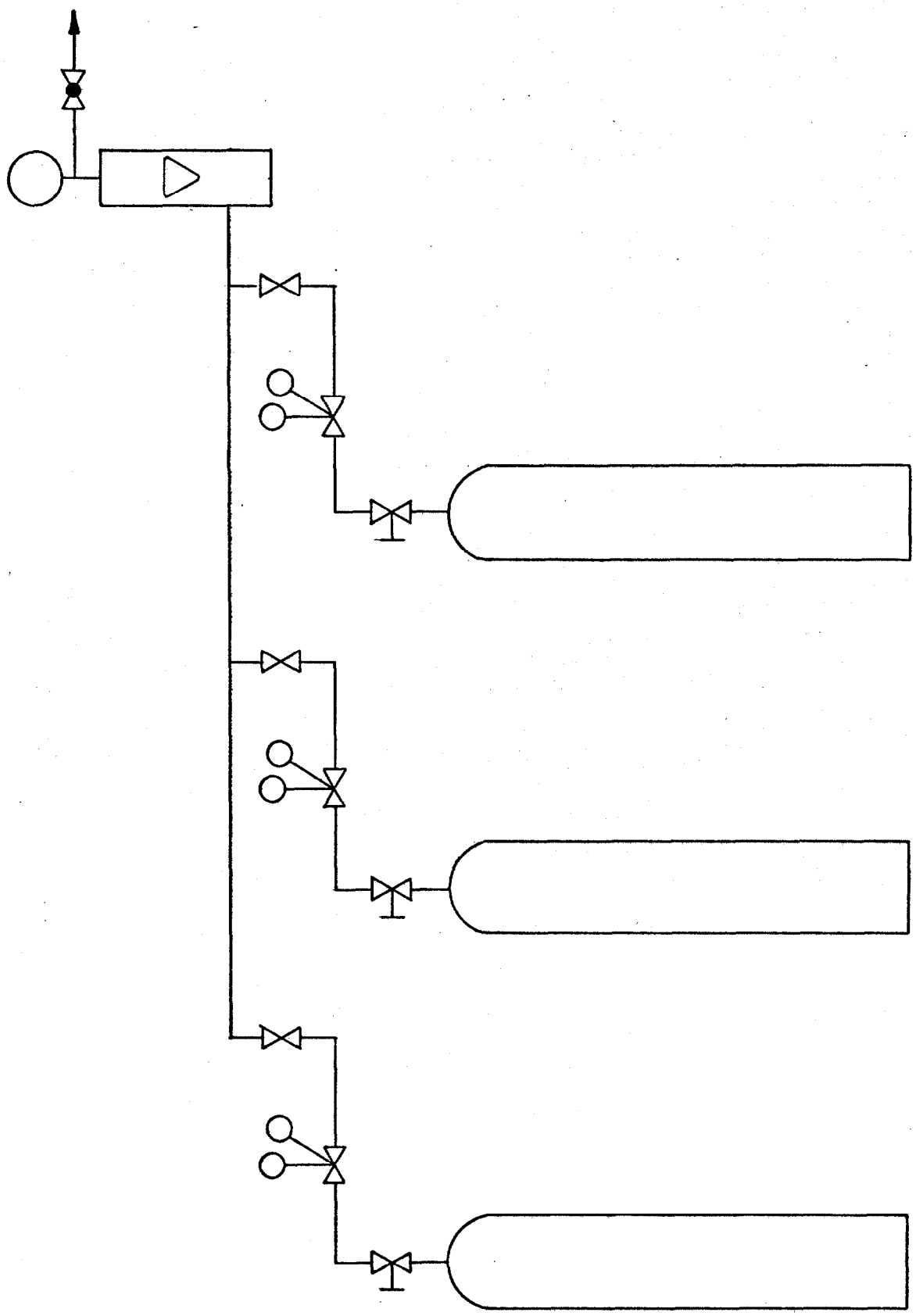

FIGURE 6.
HELIUM RELEASE MANIFOLD

An idealized response curve for the modified leak detector during a typical helium release into the ICPP ventilation system is shown in Figure 7. In drawing this curve, the electronic "noise" and/or minor concentration variations totaling 1 to 2% of the equilibrium level has been omitted. This "noise" makes it necessary to average judiciously the top equilibrium portion of the curve to obtain precise measurements. The delay between the start of the helium into the system and its initial detection (as well as the delay between stopping the helium flow and the recorded drop from the equilibrium concentration) is the travel time through the complete system to the heart of the leak detector. The rate of buildup to, and decay from, the equilibrium concentration is a function of the time necessary to establish the equilibrium concentration of helium in each of the successive parts of the system between the release point and the leak detector.

Helium was released into each of the separate systems discharging into the stack. The concentration in the stack sample stream was consistently lower for releases into the several smaller streams than for releases into the main ventilation stream. The deviations varied from -4 to -13% and averaged -8.5% for five systems. It was concluded that mixing of the various streams was not complete but that the sample will represent at least 87% of any one stream. These variations are considered small, and the sampler is deemed adequate for sampling this stack.

V. Future Applications

The modified helium leak detector has been used to determine the ICPP stack flow, the effect of atmospheric conditions on the ICPP stack flow, and to calibrate (in situ) an inaccessible and highly contaminated orifice flow meter. Other possible applications for this, or similar equipment, include checking stack flow measurements by those agencies responsible for assuring conformance to antipollution regulations, determining the flow-rates in piping or ducts where the flow rates are too low or the pipe size too small for conventional instrumentation, and determining air-exchange rates and air leakage in buildings and laboratories.

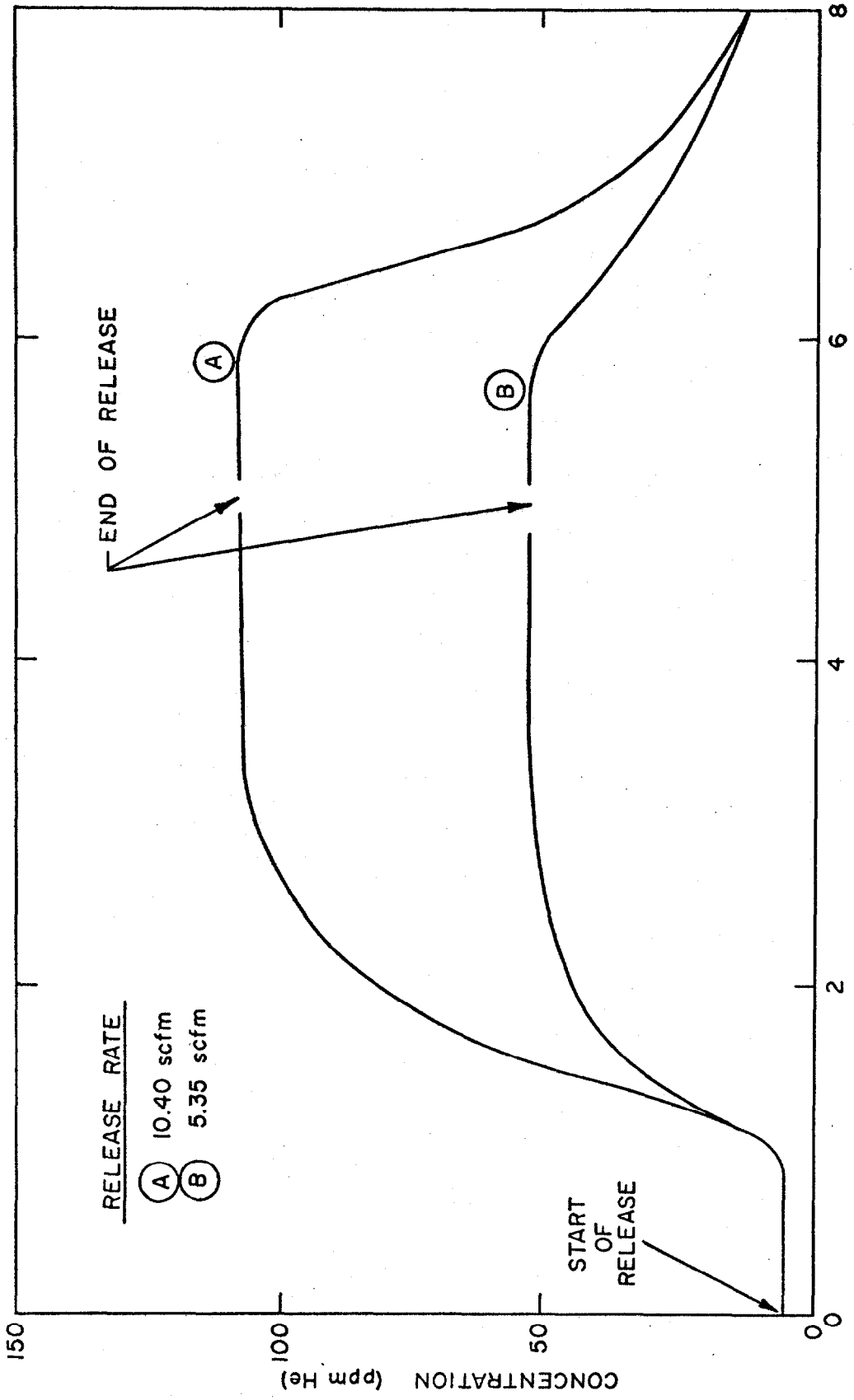

FIGURE 7. HELIUM CONCENTRATION DURING TYPICAL RELEASES

ACC-A-0255

DISCUSSION

FIRST: I would, first of all, like to resist the idea that when you have mixing of the gas you necessarily have an equal mixing of the particulate constitutents. It would seem to me that this was implied in what you said.

KERR: If we have complete mixing of the gas, we would not necessarily have complete mixing of solids?

FIRST: Not necessarily. It is possible that you may or you may not, but you can't prove complete mixing of the entrained solids from complete mixing of the gases.

KERR: I can't prove it, but one thing I can say, if we don't have complete gas mixing, we certainly don't have complete mixing of the solids. I believe I excluded the solids behavior, especially in the sample system, as part of another problem. The results reported here are th easy part of the stack monitoring problem. We are just going into a program of finding out what happens in the stack with solid materials of various sizes. We hope that this will show whether we actually get the material to the sampler, and whether it actually gets down to the filter. This will include both the plate-out problem in the sample piping as well as mixing in the stack.

FIRST: Yes. I think this was clear because you spent a good deal of time talking about isokinetic sampling and isokinetic sampling rates, but your solution to the problem is not responsive to that particular aspect of stack sampling.

KERR: I agree. We have not solved all our stack problems. We have a tool, though, that is useful for what we did, and for other uses, as well.

ZETTWOOG: I think the method is valid, but you need to have a constant mass flow into the helium detector. I wonder how you manage to have it constant with respect to change in pressure and temperature in the main flow with possible deposits of particles in the nozzle of the inlet line? The mass flow to the helium detector is critical.

KERR: I don't know much about the mechanics of the helium leak detector. The analytical people have explained to me that the vacuum gauge must be held at a constant reading. Under this condition, the output of the mass separation section is nearly linear with the concentration of helium. During a release period of 20 minutes, or so, it is necessary to adjust this adjustable inlet valve (leak) constantly to maintain conditions where we started.

ZETTWOOG: Yes, I know, but I think you have particulates in the main flow. You will have deposits in a nozzle which is very small

in diameter. As time goes on, the inside diameter of the nozzle and flow rate can change accordingly.

KERR: The inlet valve is adjusted manually to maintain a given vacuum during the test.

ZETTWOOG: If you have a change in temperature, the volume flow may remain the same, but the mass flow will not be the same.

KERR: Again, I repeat, the output of the mass separation portion of the equipment is dependent upon pressure and helium concentration. If the pressure is held constant the output will be nearly linear with the helium concentration. The expanded scale electrometer on the vacuum gage is really important in showing minute changes in the system pressure.